•523-0774076-00111A
1st Edition, 14 January 1989

Rockwell International

system manual

Starship 1 Avionics System

This system manual includes:

General Information	*523-0774077*
Operation	*523-0774078*
Theory of Operation	*523-0774079*
Maintenance	*523-0774080*
Bulletins	*523-0774081*

Collins General Aviation Division
Rockwell International Corporation
Cedar Rapids, IA 52498

Printed in the United States of America

Caution

The material in this manual is subject to change. Before attempting any maintenance operation on the equipment covered in this manual, verify that you have complete and up-to-date publications by referring to the applicable Publications and Service Bulletin Indexes.

We welcome your comments concerning this publication. Although every effort has been made to keep it free of errors, some may occur. When reporting a specific problem, please describe it briefly and include the publication part number, the paragraph or figure number, and the page number.

Send your comments to: Publications Department
Collins General Aviation Division
Rockwell International Corporation
Cedar Rapids, Iowa 52498

Starship 1
Avionics System

Rockwell International

general information

Collins General Aviation Division

Printed in USA

•523-0774077-001118
1st Edition, 14 January 1989

table of contents

Paragraph		Page
1.1	***Introduction***	1-1
1.2	***Equipment Covered***	1-1
1.3	***Purpose of Equipment***	1-1
1.4	***Equipment Location***	1-1
1.5	***Equipment Description***	1-1
1.5.1	IDS Instrument Display System	1-1
1.5.2	IAPS Integrated Avionics Processor System	1-2
1.5.3	ADS Air Data System	1-2
1.5.4	AHS Attitude Heading System	1-2
1.5.5	FCS Flight Control System	1-2
1.5.6	FMS Flight Management System	1-3
1.5.7	CS Communications System	1-3
1.5.8	NS Navigation System	1-3
1.5.9	WXR Weather Radar System	1-3
1.5.10	ADAS Aircraft Data Acquisition System	1-4
1.6	***Equipment Specifications***	1-4
1.7	***Associated Equipment***	1-4
1.8	***Abbreviations***	1-4
1.9	***Licensing Requirements***	1-4

List of Effective Pages

*The asterisk indicates pages changed, added, or deleted by the current change.

Page No	Issue
Title	14 Jan 89
List of Effective Pages	14 Jan 89
1-1 thru 1-61	14 Jan 89
1-62 Blank	14 Jan 89
1-63 thru 1-75	14 Jan 89
1-76 Blank	14 Jan 89

Record of Revisions

RETAIN THIS RECORD IN THE FRONT OF MANUAL.
ON RECEIPT OF REVISIONS, INSERT REVISED PAGES IN THE MANUAL, AND ENTER DATE INSERTED AND INITIALS.

REV NO	REVISION DATE	INSERTION DATE/BY	SB NUMBER INCLUDED	REV NO	REVISION DATE	INSERTION DATE/BY	SB NUMBER INCLUDED
1st Ed	14 Jan 89		None				

COLLINS REPAIR FACILITY 316 946-4808
(RAYTHEON TECH REP PITCH TRIM MONITOR BOARD, PART OF AUTO TRIM SYSTEM IN W/H FWD NOSE ... ROSEN INTERIORS
316 676-7260
WITH SUPPORT COLLINS Tech Rep, KNOW STARSHIP ... (ZAMBA 314 273-...
COLLINS TECH REP, RANDY ANDERSON 775 884-3560 CARSON CITY
FAX 775 884-2561

section I
general information

COLLINS RENTAL 319 295-4361
RAPIDS (...) 1 888 727-... TRIM RAPIDS

1.1 INTRODUCTION

This publication provides specifications, operating instructions, system schematic diagrams, and flight-line fault isolation procedures for the Starship 1 Avionics System. This avionics system is installed exclusively on the Starship 1 (Beech Model 2000) aircraft.

Use this manual when performing avionics troubleshooting and maintenance functions on board the aircraft, and as a training tool to teach the system functions and integration. This system manual does not replace LRU bench-level repair manuals.

1.2 EQUIPMENT COVERED

Table 1-1 lists the equipment covered in this manual. Figure 1-1 shows each unit.

1.3 PURPOSE OF EQUIPMENT

The Starship 1 Avionics System is a totally integrated aircraft system. State-of-the-art technology and manufacturing techniques are used to design and build this new generation of compact, sophisticated, and reliable avionics. Easy-to-use, built-in diagnostics dynamically report system status to simplify system maintenance and to minimize use of carry-on test equipment. The system contains an enhanced version of the traditional avionics, and is expanded to include a new electronic Engine Instrument/Caution Advisory System (EICAS) function.

1.4 EQUIPMENT LOCATION

Figure 1-2 shows the location of each unit in the aircraft. The RTA-854 is located in the radome. The radio racks are located behind the radome and are accessed from the inside of the front wheel well. The avionics bays are located above the forward wing; the elevator SVO-85C is mounted in the right bay. The DAU-850 is mounted under the floor between the pilot and copilot seats. The Integrated Avionics Processor System (IAPS) assembly and the DBU-850 are mounted in the IAPS cabinet behind the copilot seat; the DBU is in the upper compartment and the IAPS assembly is in the lower compartment. The FDU-70's, EDC-850's, aileron SVO-85A, rudder SVO-85B, ALT-55B, and RAC-870 are located as shown on sheet 1; access these units from the underside of the aircraft.

The avionics system uses several antennas. The number 1 COM antenna is mounted on the top of the aircraft. The glideslope antenna is a dual unit that is mounted below the RTA-854 in the radome. The VOR antennas are mounted on either side of the rear ventral fin. The remaining antennas are mounted along the bottom of the aircraft and are identified, as follows, from front to rear: COM 2, DME 1, TDR 1, ANT-462A/B, TDR 2, ANT-52 transmit, ANT-52 receive, DME 2, marker beacon (dual), and VLF-ANT.

1.5 EQUIPMENT DESCRIPTION

The Starship 1 Avionics System consists of the following 10 subsystems:

IDS Instrument Display System
IAPS Integrated Avionics Processor System
ADS Air Data System
AHS Attitude Heading System
FCS Flight Control System
FMS Flight Management System
CS Communication System
NS Navigation System
WXR Weather Radar System
ADAS Aircraft Data Acquisition System

1.5.1 IDS Instrument Display System

The IDS contains the six large crt's, the sensor display crt, and the sensor display driver. The two large crt's containing an inclinometer are identical PFD-870 Primary Flight Displays. Each PFD-870 replaces a conventional ADI and has a primary function of pictorially showing aircraft attitude, flight director commands, and FCS annunciations. The two large crt's below each of these units are identical ND-870 Navigation Displays. Each ND-870 replaces a conventional HSI and has a primary function of showing current heading (compass) and course information. The top center crt is an ECD-870 Engine Caution

Display. The primary function of this unit is to display engine gauges, and to annunciate caution advisories. The bottom center crt is an MFD-870 Multifunction Display. This versatile unit may be used to display moving-map navigation pictorials, NAV/sensor data, turbulence radar targets, checklist procedures, or system diagnostic pages. The SDU-640A Sensor Display Unit replaces a conventional RMI and has a primary function of showing cross-side compass and backup NAV information. An optional second SDU-640A may be installed on the copilot side of the instrument panel. The SDD-640 Sensor Display Driver is a remote mounted unit that receives navigation/compass data and provides processed display data to the SDU's.

1.5.2 IAPS Integrated Avionics Processor System

The IAPS performs a part of the integration function required to connect the various avionics systems in the aircraft. The IAPS may be considered a part of the aircraft wiring and it physically houses some of the avionics LRU's. The IAPS assembly consists of a fully wired card cage containing four independent power supplies, four independent input/output data concentrators, two FCC-850 computers (part of FCS system), the FMC-851A/852A computers (part of FMS system), and the CDC-850A coupler (part of FMS system). The ICC-850A IAPS Card Cage provides transient protection in the interface between resident LRU's and external systems. The PWR-851A Power Supplies provide four separate sources to independently power the left FCC, the right FCC, the left FMS, and the right FMS (CDC-850A) functions. The IOC-851 I/O Concentrators function as a central data gathering point. These concentrators receive data bus inputs from each major LRU on the aircraft and then transmit the data words of interest to each receiving LRU.

1.5.3 ADS Air Data System

The ADS is a dual system that senses, computes, and displays data derived from the air mass around the aircraft. The pilot system is identical to the copilot system. Each system contains a computer (with configuration module), an airspeed indicator, and an altitude/vertical speed indicator. The ADC-850 Air Data Computer is remote mounted and connects to a combined pitot/static air input port and to a temperature sensor (both are located near the radome). The ADM-850 Air Data Module is mounted to the top of the ADC-850; this module contains programmed memory chips. The ASI-850A Airspeed Indicator is a color crt mounted to the left of the PFD-870. The ASI-850A displays indicated airspeed, true airspeed, and temperature functions. The ALI-850A Altitude Indicator is a color crt mounted to the right of the PFD-870. The ALI-850A displays/controls barocorrected altitude, vertical speed, and altitude preselect functions.

1.5.4 AHS Attitude Heading System

The AHS is a dual system that senses the aircraft attitude, heading, and 3-axis rate/accelerations. The pilot system is identical to the copilot system. Each system contains a computer (with compensation module) and a flux detector. The AHC-85D Attitude Heading Computer is remote mounted in a precisely leveled UMT-16A mount. The AHC replaces a conventional vertical gyro, directional gyro, three rate gyros, and three linear accelerometers. The ICU-85 Internal Compensation Unit is mounted in the front end of the AHC-85D. The ICU module contains offset adjustments which electrically cancel flux detector alignment error and magnetic effects caused by the airframe. The FDU-70 Flux Detector Unit is mounted in the wing of the aircraft and provides magnetic flux measurements to the AHC for use in computing aircraft heading.

1.5.5 FCS Flight Control System

The FCS provides autopilot and dual flight guidance functions. The FCS consists of two identical computers, two identical flight guidance mode select panels, one autopilot control panel, a trim coupler, and three primary servos. The two FCC-850 Flight Control Computers are located in the IAPS card cage. These computers provide independent flight guidance functions and operate together to provide fail-passive autopilot and pitch trim functions. The MSP-850A Mode Select Panels are mounted near the lower center of the instrument panel. Each MSP-850A contains two rows of pushbuttons which allow the operator to select onside flight guidance modes. The APP-85D Autopilot Panel is mounted in the center pedestal. The APP-85D provides controls to engage the autopilot/yaw damper, manually slew the pitch and roll references, and select left or right flight guidance input to the autopilot. The ATC-81 Automatic Trim Coupler is located in the radio rack and provides roll and yaw trim outputs. The SVO-85( ) Primary Servos are located near the aircraft elevator, aileron, and rudder control surfaces. When engaged, the computers apply differential drive to

each servo. The servo motors then run to position the aircraft control surfaces in response to the autopilot command.

1.5.6 FMS Flight Management System

The FMS provides the flight plan navigator function, control and computation functions, and the diagnostic function. The FMS consists of a left side computer, a right-side CDU coupler, two identical display controllers, two identical altitude panels, a course/heading control panel, and a disk drive. The FMC-851A Flight Management Computer, FMC-852A Navigation Computer, and CDC-850A Control Display Coupler are located in the IAPS card cage. The FMC-851A and FMC-852A computers function together as the left side FMS computer. The CDC-850A is a partially configured version of the FMC-851A and is installed so that two CDU controllers may function with a single FMS. A CDU-850A Control Display Unit is located on each side of the instrument panel. Either CDU may be the primary controller for the FMS navigator, the on-side PFD-870/ND-870 displays, and the WXR system. The CDU also provides secondary control of the COM, NAV, ADF, and ATC radios. The AAP-850 Altitude Awareness Panels are mounted near the top of the instrument panels; each AAP provides decision height and reporting altitude (or minimum decision altitude) selection. The CHP-850 Course/Heading Panel is located below the MFD-870; the CHP provides heading and course selection and also contains a joystick for use with the MFD. The DBU-850 Data Base Unit is a 3½-inch disk drive used primarily to load data base updates to the FMS.

1.5.7 CS Communications System

The CS is a dual communications system; the pilot system is identical to the copilot system. Each system contains a vhf COM receiver, a transponder, a transponder adapter, and a radio tuning unit. The VHF-422A VHF Comm Transceivers are remote mounted units that provide multichannel voice communications. The TDR-90 Transponders are remote mounted units that automatically provide identification and altitude information to air traffic control radar systems; a CAD-870 provides ARINC 429 data conversion for the TDR. The RTU-870A Radio Tuning Units are located in the center of the instrument panel. The RTU-870A's are the primary controllers of the vhf COM, vhf NAV, ADF, and ATC radios. Either RTU can be switched to display engine data as a reversionary (backup) function.

1.5.8 NS Navigation System

The NS provides transmitters and receivers to sense and compute a variety of navigation information. The NS consists of identical pilot and copilot vhf NAV receivers, DME transceivers, ADF receivers (right ADF is optional), as well as a radio altimeter system and a VLF NAV system. Each VIR-432 VHF NAV receiver is a remote mounted unit that contains VOR/LOC, glideslope, and marker beacon receivers. Each DME-442 transceiver is a remote mounted unit that computes line-of-sight distance from the aircraft to a ground station, relative closure rate, and station identification. Each ADF-462 Automatic Direction Finder receiver is remote mounted and determines the relative bearing from the aircraft to a selected ground station. The ANT-462A ADF antenna is installed with a single ADF receiver; the ANT-462B is installed when the aircraft has two ADF receivers. The ALT-55B Radio Altimeter transceiver is a remote mounted unit that determines the aircraft altitude (up to 2500 feet) above the terrain during approach mode. Two ANT-52 Radio Altitude antennas function with the ALT-55B; one is the transmit antenna and the other is the receive antenna. The RAC-870 Radio Altitude Converter is a remote mounted unit that provides ARINC 429 data conversion for the ALT-55B. The CMA-764 VLF/Omega receiver is a remote mounted unit that senses and computes long-range NAV functions. The VLF-ANT E-field Antenna Coupler functions with the CMA-764 to complete the VLF NAV system.

1.5.9 WXR Weather Radar System

The WXR is a fully integrated turbulence-detecting weather radar system. The entire system is a single unit which is mounted on a precisely aligned surface in the radome. The RTA-854 Receiver/Transmitter/Antenna consists of a 14-inch flat-plate antenna, an rf assembly, a pedestal assembly, and a base assembly. These assemblies are not removable at the flight-line level; the RTA-854 is considered a single LRU. The radar control page of either CDU-850A (part of the FMS) provides WXR mode selection. The RTA-854 can display detected weather radar and/or air turbulence targets on either of the ND-870's or on the MFD-870.

1.5.10 ADAS Aircraft Data Acquisition System

The ADAS provides the sensor portion of the EICAS function. The ADAS gathers engine and aircraft sensor data and then provides processed ARINC 429 output data to the ECD-870 (or MFD-870) for monitoring and display. Traditionally, this data is displayed on mechanical gauges. The ADAS contains two remote mounted engine data concentrators and a data acquisition unit. Each EDC-850 Engine Data Concentrator gathers discrete engine data pertaining to one of the aircraft engines and provides it to the DAU-850 Data Acquisition Unit (and also to the RTU's for display in reversionary mode). The DAU processes engine data from both EDC's, along with other aircraft sensor data, and then provides this information to the IDS and IAPS systems. If monitoring in the IDS system detects an abnormal condition, the DAU generates discrete caution/warn and aural warn exceedence outputs.

1.6 EQUIPMENT SPECIFICATIONS

Table 1-2 lists equipment specifications.

1.7 ASSOCIATED EQUIPMENT

Refer to table 1-6 for a list of associated equipment (mounts).

1.8 ABBREVIATIONS

Refer to table 1-7 for a list of abbreviations, acronyms, and mnemonics that are used throughout this publication.

1.9 LICENSING REQUIREMENTS

Aircraft equipped with any radio transmitting systems must be licensed by the FCC. Licensing requirements are outlined in FCC document 47 CFR Chapter I, Part 87, section 87.29. A copy of FCC form 404, "Application for Aircraft Radio Station License," is included at the end of this section as figure 1-3. A copy of form 404A, "Temporary Aircraft Radio Station Operating Authority," is also included as part of figure 1-3.

Figure 1-4 is a copy of FCC form 753, "Restricted Radiotelephone Operator Permit Application." This permit is required only if pilots plan to fly outside of the United States (ie, Canada, Mexico, etc).

Figures 1-5 and 1-6 are copies of FAA advisories concerning radar systems. Figure 1-5 is titled "Recommended Radiation Safety Precautions for Ground Operation of Airborne Weather Radar." Figure 1-6 is titled "Maintenance of Weather Radar Radomes."

The FCC forms can be obtained from the Federal Communications Commission by telephone (717-337-1212), or by writing to the following address:

Federal Communications Commission
Consumer Assistance Branch
Gettysburg, PA 17326

Table 1-1. Equipment Covered.

UNIT	DESCRIPTION	COLLINS PART NUMBER	QUANTITY
IDS SYSTEM			
PFD-870	Primary Flight Display	622-8526-003	2
ND-870	Navigation Display	622-8527-003	2
MFD-870	Multifunction Display	622-8528-003	1
ECD-870	Engine/Caution Display	622-8529-003	1
SDU-640A	Sensor Display Unit	622-8336-011	1 or 2
SDD-640	Sensor Display Driver	622-7207-002	1

Table 1-1. Equipment Covered (Cont).

UNIT	DESCRIPTION	COLLINS PART NUMBER	QUANTITY
	*IAPS SYSTEM		
ICC-850A	IAPS Card Cage	622-8364-001	1
PWR-851A	IAPS Power Supply	622-8365-001	4
IOC-851	I/O Concentrator	622-7405-002	4
	ADS SYSTEM		
ADC-850	Air Data Computer	622-7208-001	2
ADM-850	Air Data Module	622-7737-001	2
ASI-850A	Airspeed Indicator	622-8335-002	2
ALI-850A	Altitude Indicator	622-8334-002	2
	AHS SYSTEM		
AHC-85D	Attitude Heading Computer	622-7386-001	2
ICU-85	Internal Compensation Unit	622-6189-001	2
FDU-70	Flux Detector Unit	622-5812-001	2
	FCS SYSTEM		
MSP-850A	Mode Select Panel	622-8330-002	2
APP-85D	Autopilot Panel	622-7411-204	1
FCC-850	Flight Control Computer	622-7410-001	2
SVO-85A	Aileron Servo	622-4404-001	1
SVO-85B	Rudder Servo (pendant cable)	622-5027-002	1
SVO-85C	Elevator Servo (pendant cable)	622-6717-004	1
ATC-81	Automatic Trim Coupler	622-9575-001	1
	FMS SYSTEM		
CDU-850A	Control Display Unit	622-8363-002	2
CHP-850	Course/Heading Panel	622-7397-002	1
AAP-850	Altitude Awareness Panel	622-7398-002	2
DBU-850	Data Base Unit	622-7400-002	1
FMC-851A	Flight Management Computer	622-8682-002	1
FMC-852A	Navigation Computer	622-8683-002	1
CDC-850A	Control Display Coupler	622-8681-002	1

Table 1-1. Equipment Covered (Cont).

UNIT	DESCRIPTION	COLLINS PART NUMBER	QUANTITY
	CS SYSTEM		
VHF-422A	VHF Comm Transceiver	622-7292-001	2
RTU-870A	Radio Tuning Unit	622-9346-002	2
TDR-90	Transponder	622-1270-001	2
CAD-870	Transponder Adapter	622-7346-001	2
	NS SYSTEM		
VIR-432	VHF Navigation Receiver	622-7194-001	2
DME-442	DME Transceiver	622-7309-001	2
ADF-462	ADF Receiver	622-7382-001	1 or 2
ANT-462A	ADF Antenna (Single)	622-7383-001	1
	or		
ANT-462B	ADF Antenna (Dual)	622-7384-001	1
ALT-55B	Radio Altimeter	622-2855-001	1
ANT-52	Radio Altimeter Antenna	622-6793-001	2
RAC-870	Radio Altitude Converter	622-7209-001	1
CMA-764	VLF/Omega Receiver (Canadian Marconi)	270-1306-010	1
VLF-ANT	Antenna Coupler (E-field) (Canadian Marconi)	270-1306-050	1
	WXR SYSTEM		
RTA-854	Receiver/Transmitter/Antenna	622-8440-001	1
	ADAS SYSTEM		
EDC-850	Engine Data Concentrator (Ametek, Beech Supplied)	NA	2
DAU-850	Data Acquisition Unit	622-7414-002	1

*Both FCC-850's, the FMC-851A, the FMC-852A, and the CDC-850A modules are all installed in the IAPS, but are documented as part of the FCS and FMS systems.

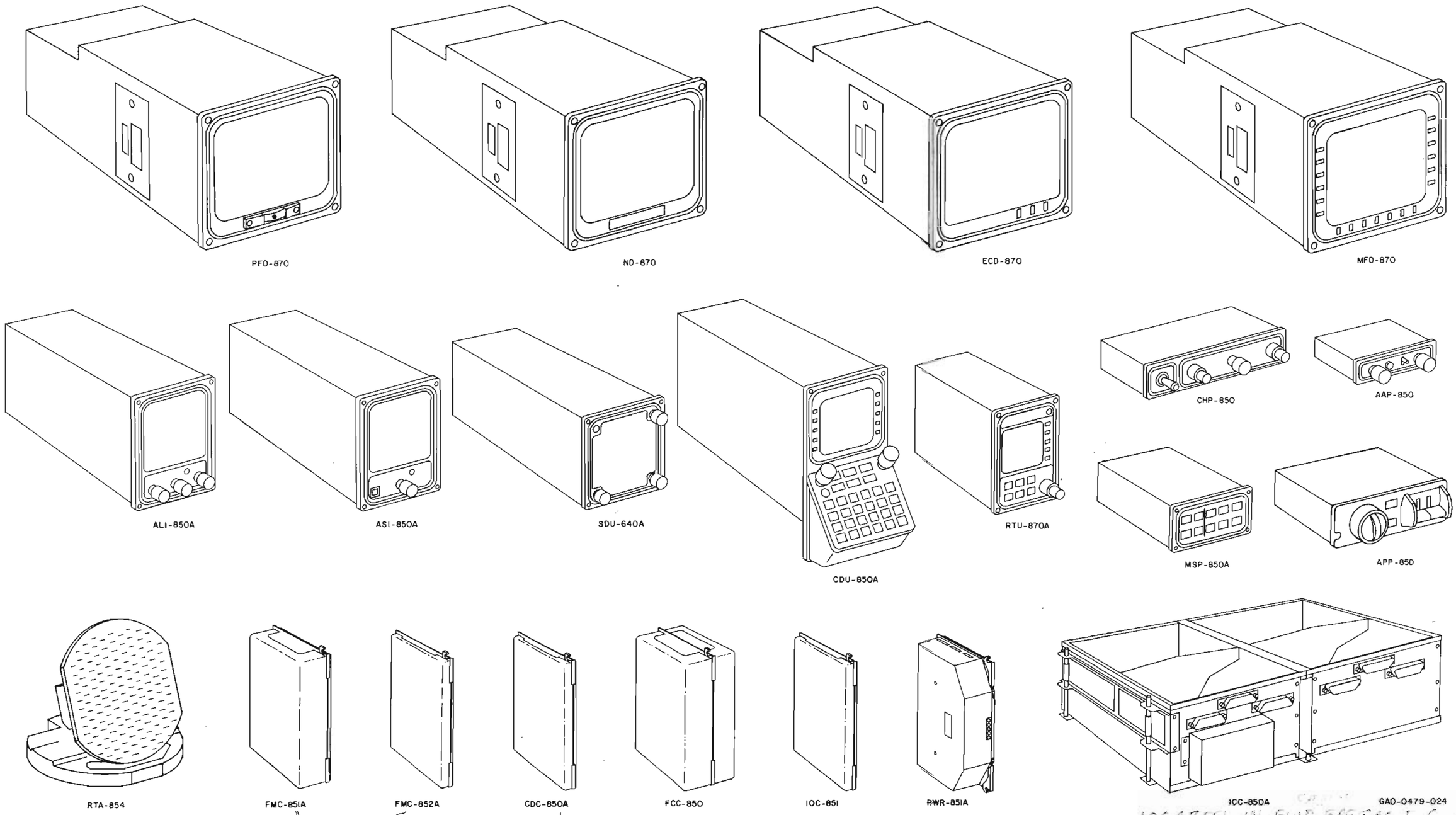

SWAP IN PAIRS ONLY (MARRIED SET, FOR DATA)

NOT USED ON DUAL SYSTEM LIKE NC-51

LOCATED IN FWD BAGGAGE COMPART

Starship 1 Avionics System
Figure 1 (Sheet 1 of 2)

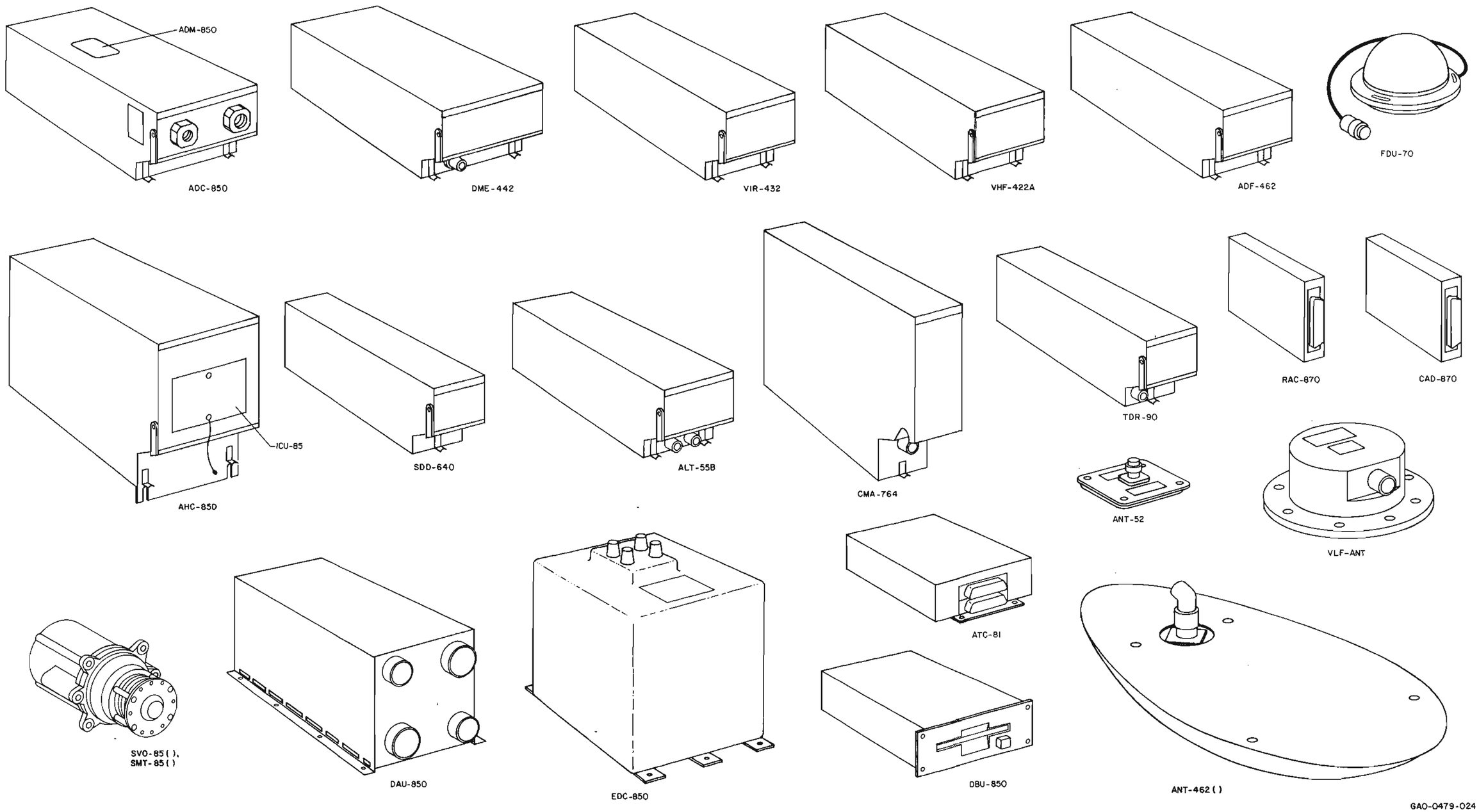

Starship 1 Avionics System
Figure 1 (Sheet 2 of 2)

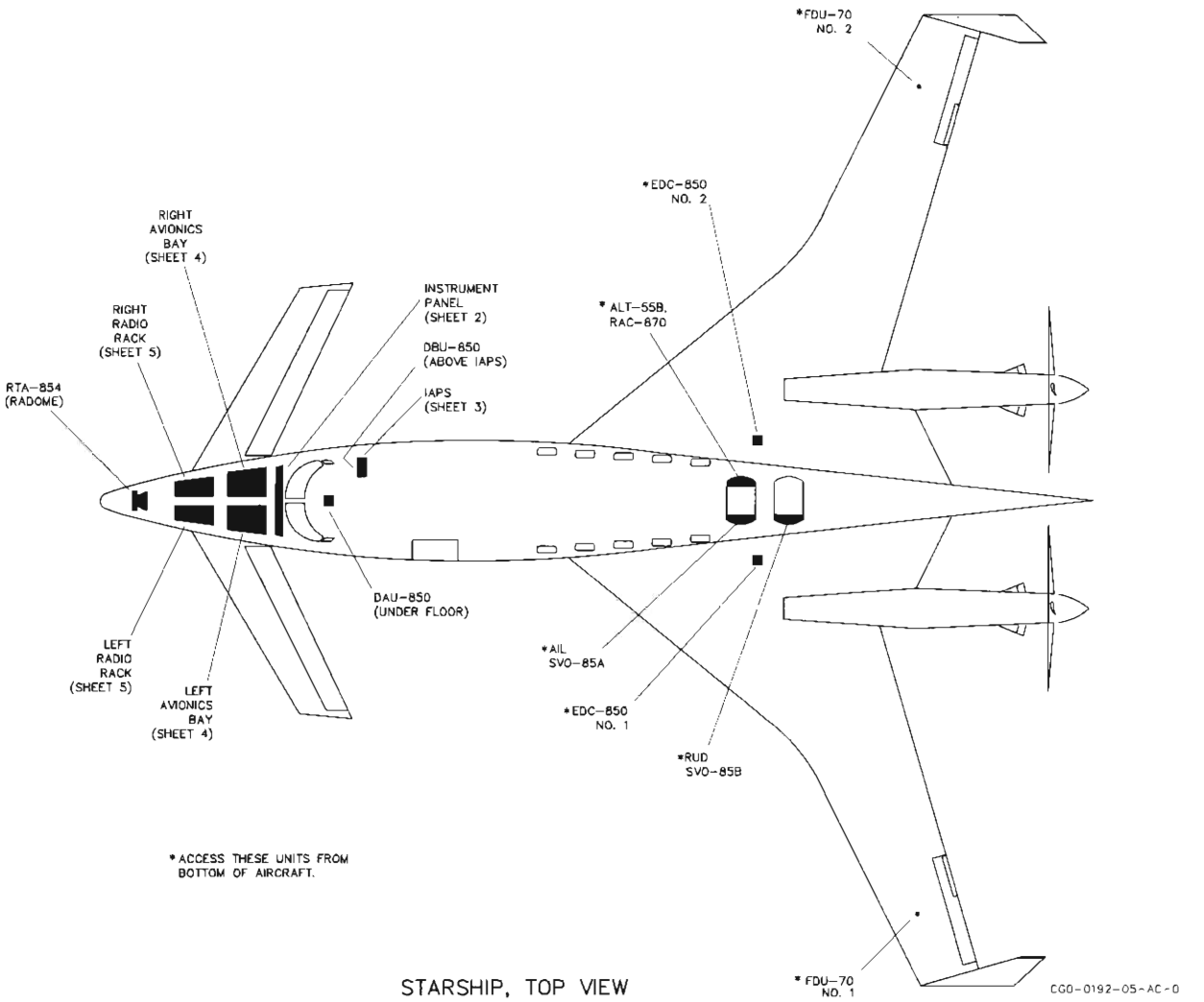

Equipment Locations
Figure 1-2 (Sheet 1 of 5)

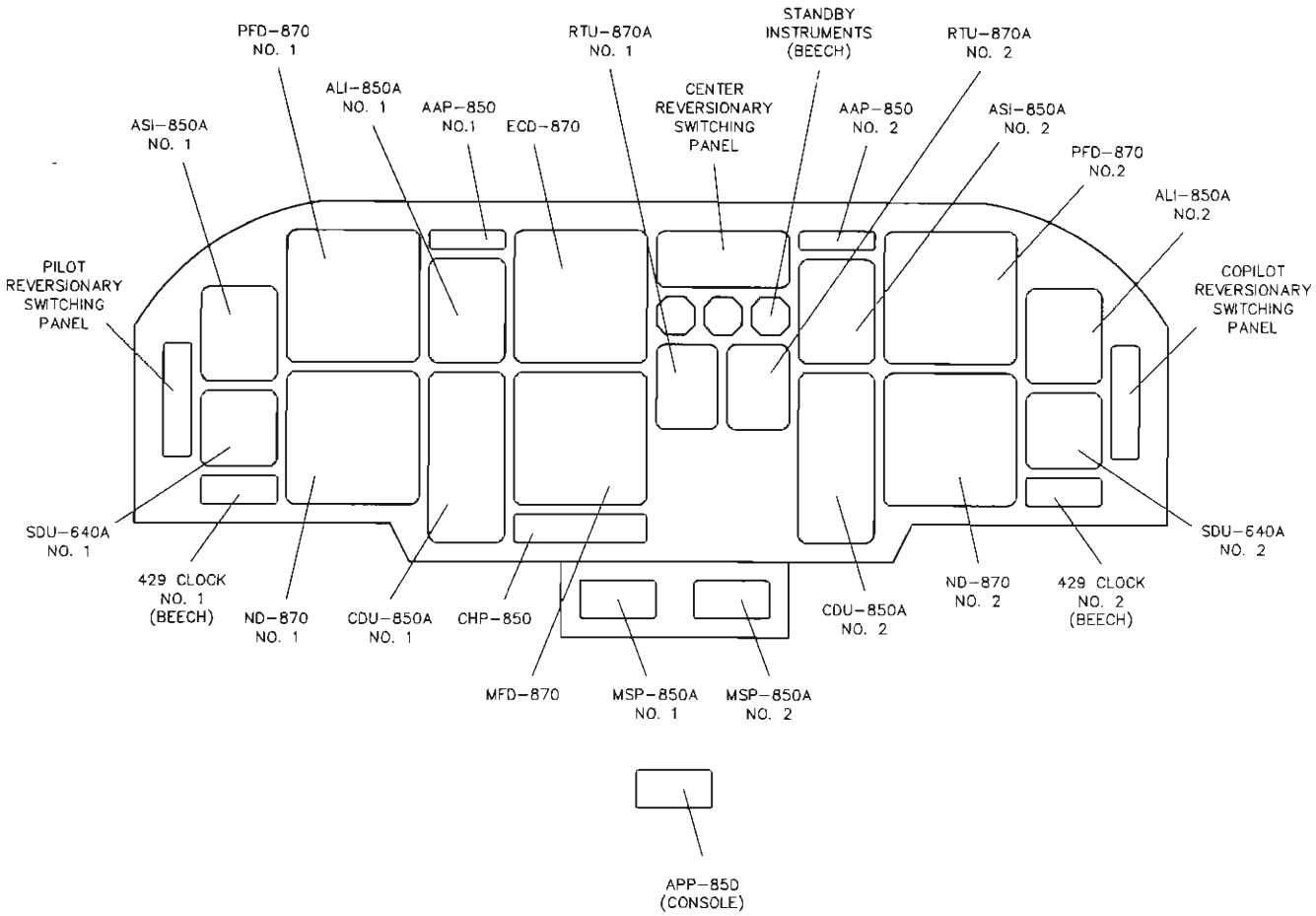

INSTRUMENT PANEL, FORWARD VIEW

CG0-0192-05-AC-0

Equipment Locations
Figure 1-2 (Sheet 2 of 5)

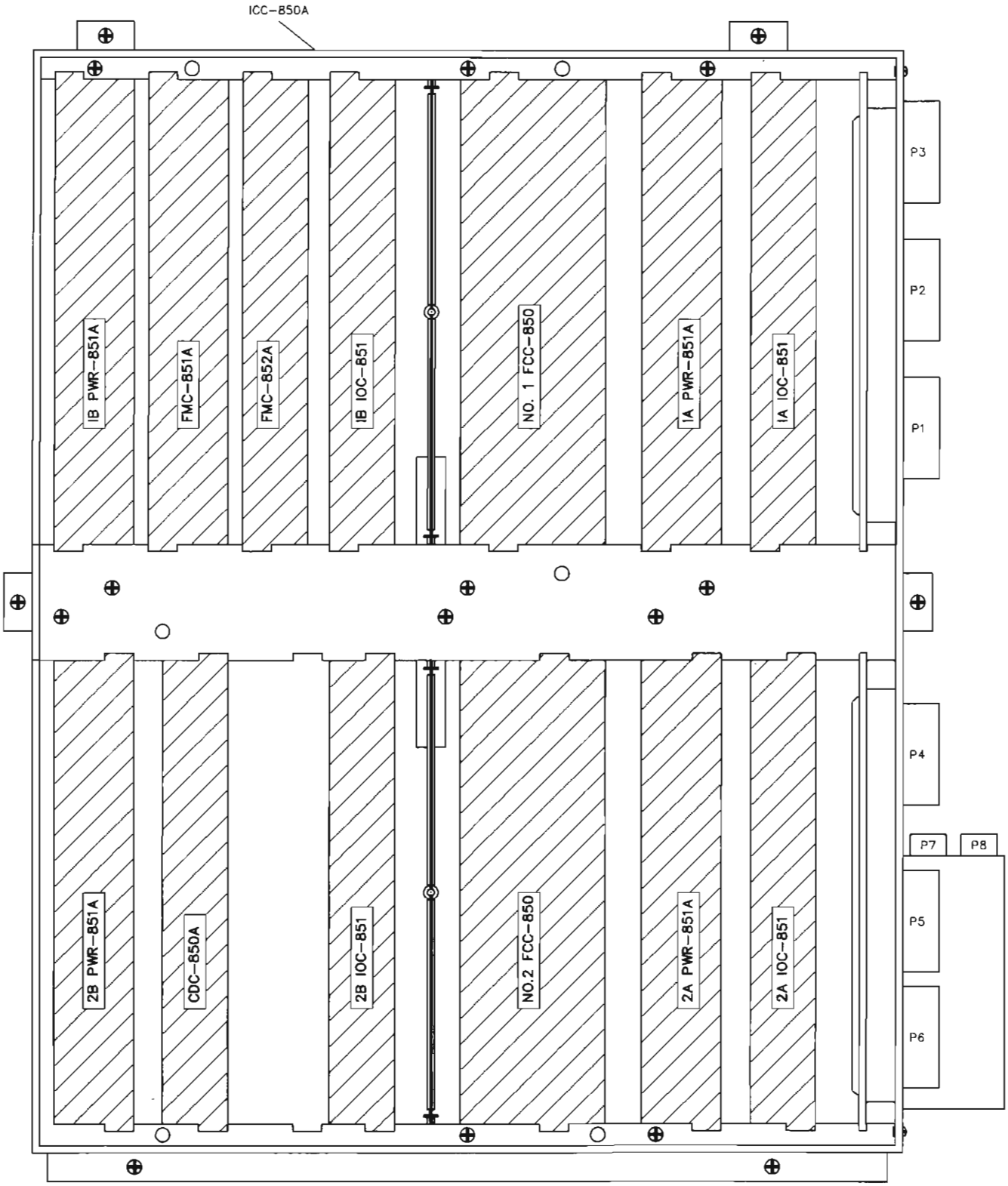

Equipment Locations
Figure 1-2 (Sheet 3 of 5)

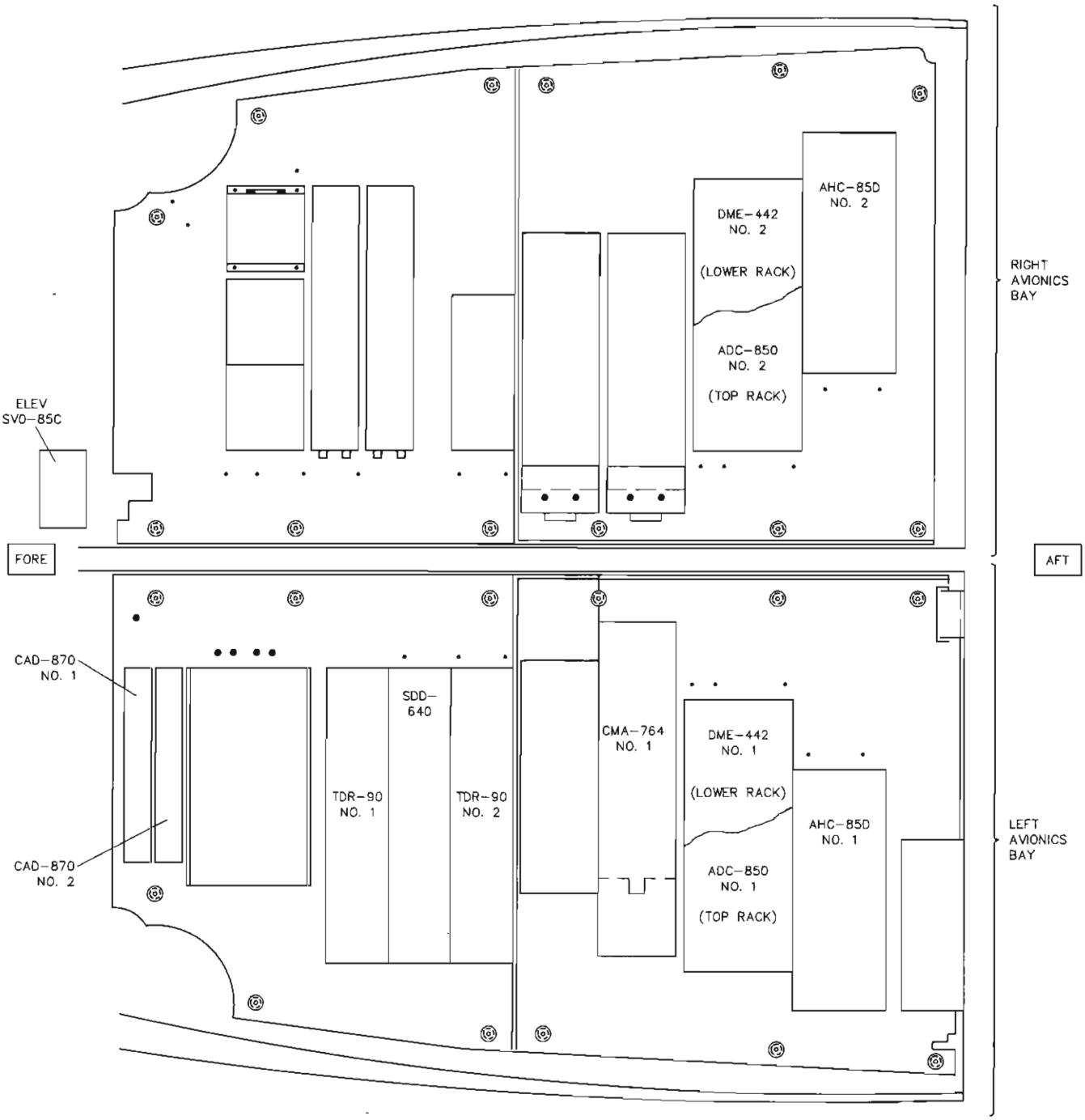

NOTE: ADM-850 IS MOUNTED IN TOP OF ADC-850;
ICU-85 IS MOUNTED IN FRONT END OF AHC-85D.

AVIONICS BAYS, TOP VIEW

CG0-0192-05-AC-0

Equipment Locations
Figure 1-2 (Sheet 4 of 5)

ADDENDUM 1

TO

STARSHIP 1 AVIONICS SYSTEM

SYSTEM MANUAL

PART NUMBER 523-0774076, DATED 14 JAN 1989

Insert this addendum facing page 1-12 of the General Information Section of the manual

The avionics bays on production aircraft are organized as shown below:

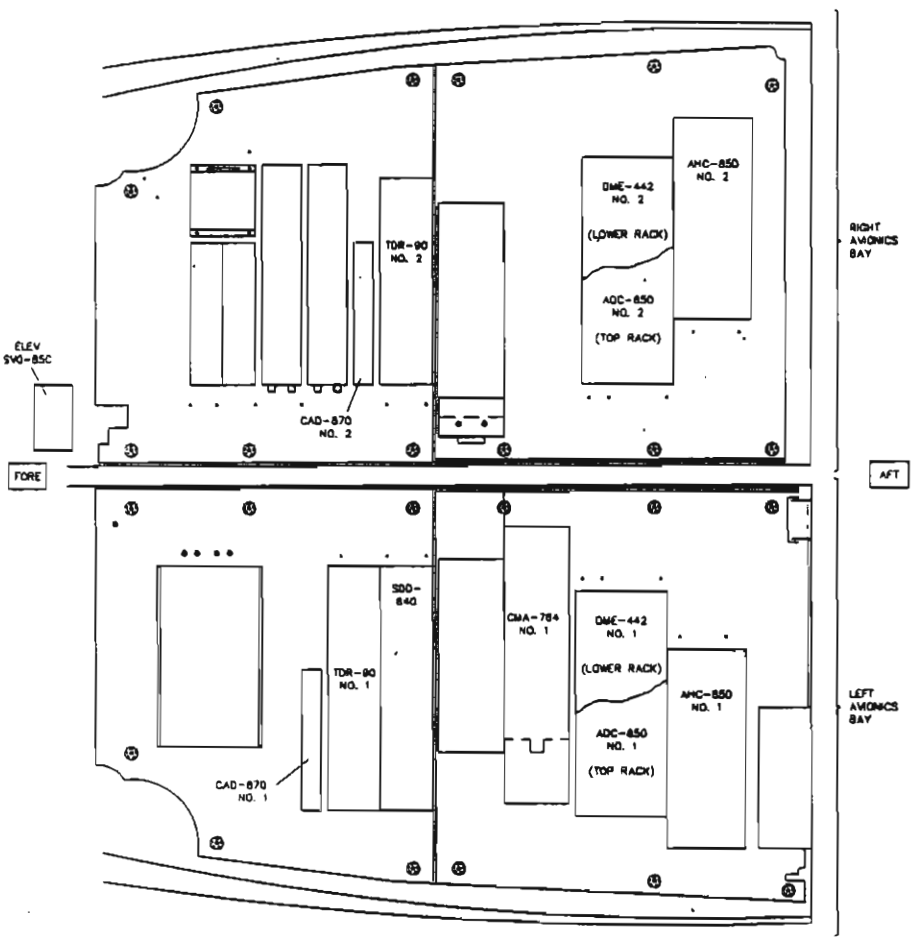

NOTE: ADM-850 IS MOUNTED IN TOP OF ADC-850;
ICU-85 IS MOUNTED IN FRONT END OF AHC-850.

AVIONICS BAYS, TOP VIEW

CGO-0192-05-AC-0

ADDENDUM 1

TO

STARSHIP 1 AVIONICS SYSTEM

SYSTEM MANUAL

PART NUMBER 523-0774076, DATED 14 JAN 1989

Insert this addendum facing page 1-13 of the General Information Section of the manual

The radio racks on production aircraft are organized as shown below:

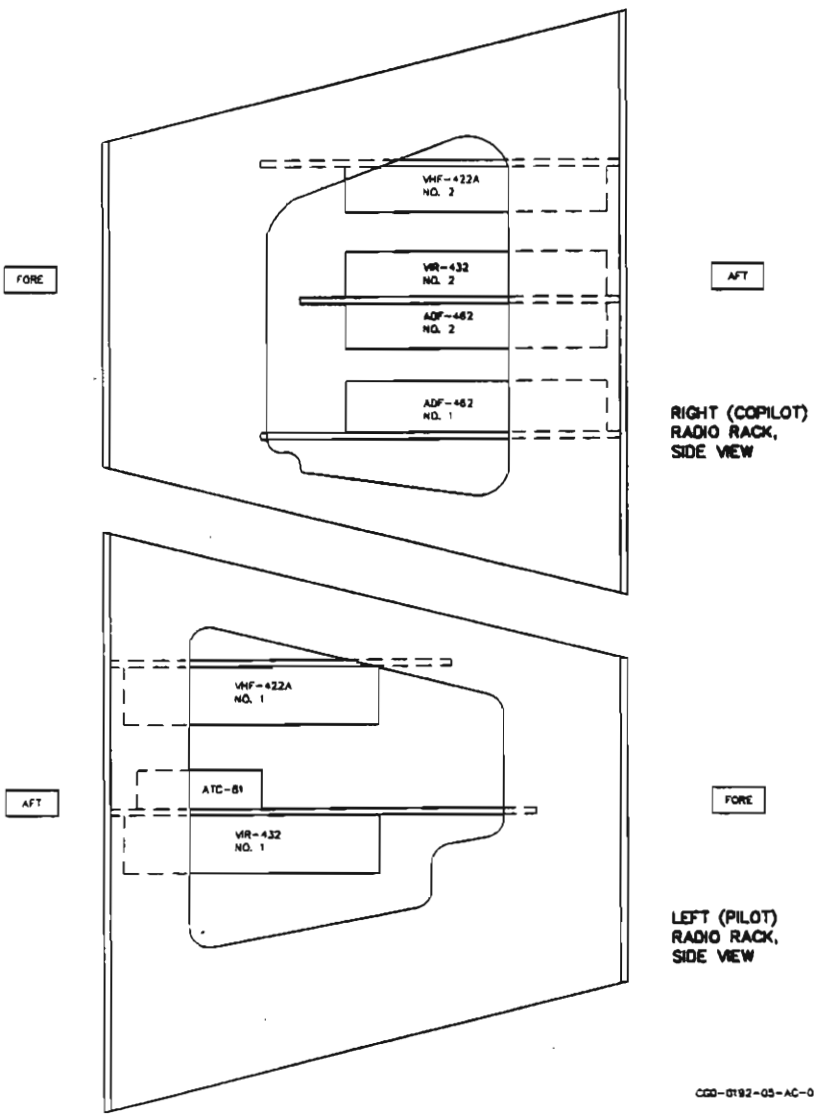

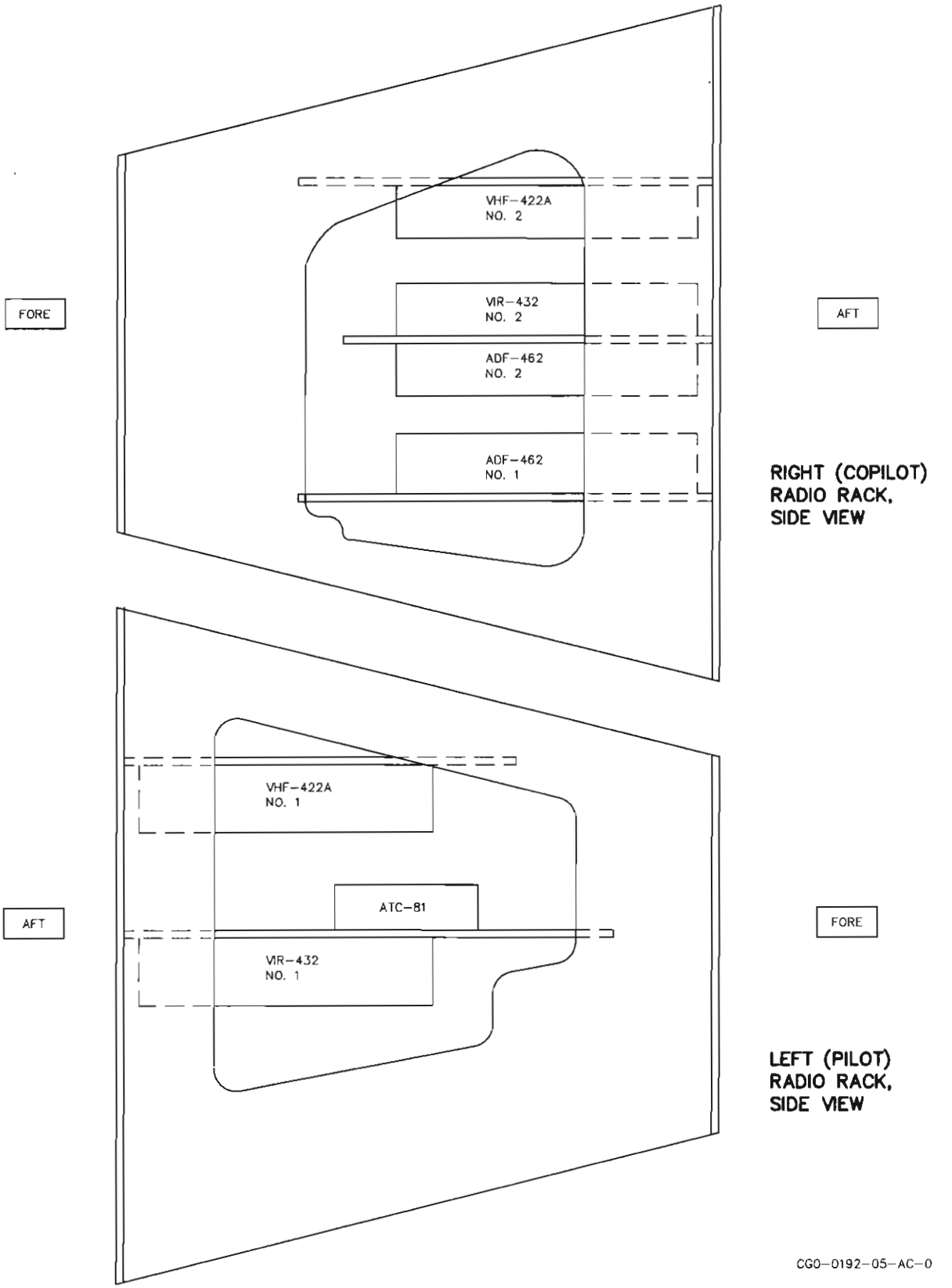

Equipment Locations
Figure 1-2 (Sheet 5 of 5)

Table 1-2. Equipment Specifications.

CHARACTERISTIC	SPECIFICATION
Certification	
FAA TSO	Refer to table 1-3.
Environmental	Refer to table 1-3 and to the environmental qualification forms provided in table 1-5.
Size	Refer to table 1-4.
Weight	Refer to table 1-4.
Power requirements	Refer to table 1-4 (nominal values).
Time between overhauls	On condition, except for the following:
	SMT-85( ): 10 000 flight hours (also inspect as defined below).
	SVO-85( ), SMT-85( ): Inspect each servo and servo mount concurrent with each aircraft major overhaul, rigging maintenance, or the Beech recommended control system inspection period. Refer to the maintenance section of this publication for the inspection procedure.
	RTA-854: Once a year, clean and lubricate the mechanical portion (scan/tilt gears and sectors) of the unit. Refer to the maintenance section of this publication for the cleaning/lubrication procedure.
	ADC-850: Every 2 years, recertify each computer according to FAR part 91.171. Refer to the maintenance section of this publication for details.
	VIR-432: Every 30 days, perform a VOR accuracy check according to FAR part 91.25. Refer to the maintenance section of this publication for details.
	TDR-90: Every two years, check each transponder according to FAR part 91.172. Refer to the maintenance section of this publication for details.

Table 1-3. Certification Categories.

UNIT	FAA TSO	SYSTEM TSO	ENVIRONMENTAL CATEGORIES
AAP-850	C113 (Electronic Display)		DO-160B /A2F1/BB/PKS/E1/XXXXXA/BZ/AZAZA
ADC-850	C8c (Vertical Speed) C10b (Altimeter) C43a (Temperature) C46a (Max Allowable Airspeed)	ADS-850	DO-160B /F2/BB/JY/E4/XXXXXZ/BZ/AZZZZ
ADF-462	C41d (ADF Receiver)		DO-160B /A2E1/BB/JY/EZXXXXXZ/BZ/AZAAA
ADM-850	C8c (Vertical Speed) C10b (Altimeter) C43a (Temperature) C46a (Max Allowable Airspeed)	ADS-850	DO-160B /F2/BB/JY/E4/XXXXXZ/BZ/AZZZZ
AHC-85D	C4c (Bank and Pitch Instruments) C6c (Directional Instrument, Magnetic Gyro)		DO-160A /A2F2/AJEXXXXXA/BZ/AZ/AZ/

Table 1-3. Certification Categories (Cont).

UNIT	FAA TSO	SYSTEM TSO	ENVIRONMENTAL CATEGORIES
ALI-850A	C113 (Electronic Display) C10b (Altimeter) C8c (Vertical Speed)	ADS-850	DO-160B /A2D1/BB/PKS/E1/XXXXXA/BZ/AZAZA
ALT-55B	C87 (Radio Altimeter)		DO-138 /AG/A/JN/AAAEXXXXX
ANT-52	C87 (Radio Altimeter)		Not applicable
ANT-462A	C41d (ADF Receiver)		DO-160B /A2E1/BB/JY/E2/SXXXXX/BZ/AZAXA
ANT-462B	C41d (ADF Receiver)		DO-160B /A2E1/BB/JY/E2/SXXXXX/BZ/AZAXA
APP-85D	C52a (Flight Director) C9c (Autopilot)	*APS-850	DO-160B /A2F1/BB/PKS/E1/XXXXXZ/BZ/AZAZA
ASI-850A	C113 (Electronic Display) C46a (Max Allowable Airspeed) C43a (Temperature)	ADS-850	DO-160B /A2D1/BB/PKS/E1/XXXXXA/BZ/AZAZA
ATC-81	C9c (Autopilot)	*APS-850	DO-160 D2A/YJ/XXXXXXZBABZ
CAD-870	C74c (Transponder)		DO-160A /A2E1/B/JY/EXXXXXZ/BZ/AZA
CDC-850A	C115 (Multisensor Navigator) C94a (Airborne Omega Receiver)	FMS-850A	DO-160B /A1F1/BB/JY/E1/XXXXXZ/BZ/AZAZA
CDU-850A	C113 (Electronic Display) C115 (Multisensor Navigator) C94a (Airborne Omega Receiver)	FMS-850A	DO-160B /A2F1/BB/PKS/E1/XXXXXA/BZ/AZAZA
CHP-850	C113 (Electronic Display) C115 (Multisensor Navigator)	FMS-850A	DO-160B /A2F1/BB/PKS/E1/XXXXXA/BZ/AZAZA
CMA-764	Canadian Marconi holds TSO		
DAU-850	TC on aircraft (PMA)		
DBU-850	C115 (Multisensor Navigator)	FMS-850A	DO-160B /A1F1/BA/O/E1/XXXXXZ/BZ/AZAZA
DME-442	C66b (DME Transceiver)		DO-160A /A2E1/B/JY/EXXXXXZ/BZ/AZZ
ECD-870	C43a (Temperature) C44a (Fuel Flow) C47 (Pressure) C49a (Tachometer) C113 (Electronic Display)		DO-160B /A1F1/CB/PKS/E1/XXXXXZ/BZ/AZAZA
EDC-850	Obtained by Ametek		
FCC-850	C52a (Flight Director) C9c (Autopilot)	*APS-850	DO-160B /A2F1/BB/JY/E1/XXXXXZ/BZ/AZAZA
FDU-70	C6c (Direction Instrument, Magnetic Gyro)		DO-160A /A2F2/B/VR/EXXXXXZ/BZ/AZA
FMC-851A	C115 (Multisensor Navigator) C94a (Airborne Omega Receiver)	FMS-850A	DO-160B /A1F1/BB/JY/E1/XXXXXZ/BZ/AZAZA

Table 1-3. Certification Categories (Cont).

UNIT	FAA TSO	SYSTEM TSO	ENVIRONMENTAL CATEGORIES
FMC-852A	C115 (Multisensor Navigator) C94a (Airborne Omega Receiver)	FMS-850A	DO-160B /A1F1/BB/JY/E1/XXXXXZ/BZ/AZAZA
ICC-850A	C115 (Multisensor Navigator) C52a (Flight Director) C9c (Autopilot)	*APS-850 FMS-850A	DO-160B /A2F1/BB/JY/E1/XXXXXZ/BZ/AZAZA
ICU-85	C6c (Direction Instrument, Magnetic Gyro)		DO-160A /A2F2/AJEXXXXXA/BZ/AZ/AZ/
IOC-851	C115 (Multisensor Navigator) C52a (Flight Director) C9c (Autopilot)	*APS-850 FMS-850A	DO-160B /A2F1/BB/JY/E1/XXXXXZ/BZ/AZAZA
MFD-870	C63c (Weather Radar) C94a (Airborne Omega Receiver) C105 (Auxiliary Display) C113 (Electronic Display) C115 (Multisensor Navigator)		DO-160B /A1F1/CB/PKS/E1/XXXXXZ/BZ/AZAZA
MSP-850A	C52a (Flight Director) C9c Autopilot)	*APS-850	DO-160B /A2F1/BB/PKS/E1/XXXXXZ/BZ/AZAZA
ND-870	C6c (Direction Instrument, Magnetic Gyro) C34d (ILS Glideslope Receiver) C36d (ILS Localizer Receiver) C40b (VOR Receiver) C63c (Weather Radar) C113 (Electronic Display) C115 (Multisensor Navigator)		DO-160B /A1F1/CB/PKS/E1/XXXXXZ/BZ/AZAZA
PFD-870	C3c (Turn and Slip) C4c (Bank and Pitch Instruments) C35d (Marker Beacon) C52a (Flight Director) C87 (Radio Altitude) C113 (Electronic Display)		DO-160B /A1F1/CB/PKS/E1/XXXXXZ/BZ/AZAZA
PWR-851A	C115 (Multisensor Navigator) C52a (Flight Director) C9c (Autopilot)	*APS-850 FMS-850A	DO-160B /A2F1/BB/JY/E1/XXXXXZ/BZ/AZAZA
RAC-870	C87 (Radio Altimeter)		DO-160A /A2E1/B/JY/EXXXXXZ/BZ/AZA
RTA-854	C63c (Weather Radar)	**TWR-850	DO-160B /F2/BB/J/E1/XXXXXZ/BZ/AZAZA
RTU-870A	C34d (ILS Glideslope Receiver) C36d (ILS Localizer Receiver) C37c (VHF Transmitter) C38c (VHF Receiver) C40b (VOR Receiver) C41c (ADF Receiver) C66b (DME Transceiver) C74c (Transponder)		DO-160A /A2F1/B/PKS/EXXXXXZ/BZ/AZZ

Table 1-3. Certification Categories (Cont).

UNIT	FAA TSO	SYSTEM TSO	ENVIRONMENTAL CATEGORIES
SDD-640	C6c (Direction Instrument, Magnetic Gyro) C34e (ILS Glideslope Receiver) C36e (ILS Localizer Receiver) C40b (VOR Receiver) C41d (ADF Receiver) C66b (DME Transceiver) C104 Class D(V) (MLS Receiver) C113 (Electronic Display)	MND-640	DO-160B /F2/BB/JY/E1/XXXXXZ/BZ/AZAZA
SDU-640A	C6c (Direction Instrument, Magnetic Gyro) C34e (ILS Glideslope Receiver) C36e (ILS Localizer Receiver) C40b (VOR Receiver) C41d (ADF Receiver C66b (DME Transceiver) C104 Class D(V) (MLS Receiver) C113 (Electronic Display)	MND-640	DO-160B /A2D1/BB/PKS/E1/XXXXXA/BZ/AZAZA
SMT-85A	C9c (Autopilot)	*APS-850	DO-160A /A2F2/B/RY/XXXXXXXXXXX
SMT-85B	C9c (Autopilot)	*APS-850	DO-160A /A2F2/B/RY/XXXXXXXXXXX
SMT-85C	C9c (Autopilot)	*APS-850	DO-160A /A2F2/B/RY/XXXXXXXXXXX
SVO-85A	C9c (Autopilot)	*APS-850	DO-160A /A2F2/B/RY/EXXXXXA/BZ/AZZ
SVO-85B	C9c (Autopilot)	*APS-850	DO-160A /A2F2/B/RY/EXXXXXA/BZ/AZZ
SVO-85C	C9c (Autopilot)	*APS-850	DO-160A /A2F2/B/RY/EXXXXXA/BZ/AZZ
TDR-90	C74c (Transponder)		DO-138 /AD/A/$\frac{JN}{G}$/AAAEXXXXX
VHF-422A	C37c (VHF Transmitter) C38c (VHF Receiver)		DO-160A /A2E1/B/JY/EXXXXXZ/BZ/AZA
VIR-432	C34d (ILS Glideslope Receiver) C35d (Marker Beacon Receiver) C36d (ILS Localizer Receiver) C40b (VOR Receiver)		DO-160A /A2E1/B/JY/EXXXXXZ/BZ/AZA
VLF-ANT	Canadian Marconi holds TSO		

*The APS-850 system TSO approval is valid only when the system configuration contains two or more AHC-85D Attitude Heading Computers (CPN 622-7386-001) or other attitude heading reference sensors which meet ARINC 429 (Mark 33 Digital Information Transfer System) specification digital interface requirements.

** Panel control functions for the TWR-850 system are provided by the CDU-850A.

Table 1-4. Unit Weight, Power Requirements, and Size.

UNIT	WEIGHT kg (lb)	28 V DC POWER (W)	SIZE (H × W × L) mm (in)
AAP-850	0.18 (0.4)	NA	24 × 106 × 71 (0.95 × 4.18 × 2.80)
ADC-850	2.45 (5.4)	11	85 × 130 × 355 (3.36 × 5.10 × 13.97) (½ ATR, short-low)
ADF-462	1.82 (4.0)	16.5	85 × 97 × 355 (3.36 × 3.80 × 13.97) (⅜ ATR, short-low)
ADM-850	0.05 (0.1)	NA	49 × 37 × 21 (1.91 × 1.46 × 0.84)
AHC-85D	6.59 (14.5)	56	194 × 130 × 355 (7.63 × 5.10 × 13.97) (½ ATR, short-full height)
ALI-850A	2.64 (5.8)	22	132 × 107 × 244 (5.20 × 4.20 × 9.59)
ALT-55B	2.55 (5.6)	30	85 × 97 × 355 (3.36 × 3.80 × 13.97) (⅜ ATR, short-low)
ANT-52	0.09 (0.2)	NA	4 × 89 × 93 (0.17 × 3.50 × 3.65)
ANT-462A	1.41 (3.1)	NA	42 × 219 × 432 (1.65 × 8.62 × 17.00)
ANT-462B	2.50 (5.5)	NA	28 × 270 × 605 (1.10 × 10.62 × 23.81)
APP-85D	0.64 (1.4)	10.5	48 × 146 × 144 (1.88 × 5.75 × 5.69)
ASI-850A	2.55 (5.6)	22	132 × 107 × 244 (5.20 × 4.20 × 9.59)
ATC-81	0.60 (1.3)	22	44 × 110 × 164 (1.73 × 4.33 × 6.44)
CAD-870	0.36 (0.8)	3.5	85 × 26 × 243 (3.33 × 1.04 × 9.56)
CDC-850A	0.41 (0.9)	*ICC	222 × 139 × 17 (8.73 × 5.48 × 0.65)
CDU-850A	2.82 (6.2)	29	195 × 106 × 254 (7.68 × 4.18 × 10.00)
CHP-850	0.36 (0.8)	NA	37 × 182 × 85 (1.45 × 7.18 × 3.35)
CMA-764	3.18 (7.0)	11	194 × 61 × 355 (7.63 × 2.42 × 13.97) (¼ ATR, short-full height)
DAU-850	2.45 (5.4)	14	140 × 140 × 268 (5.50 × 5.50 × 10.55)
DBU-850	0.95 (2.1)	7	48 × 146 × 191 (1.88 × 5.75 × 7.52)
DME-442	2.41 (5.3)	18	85 × 130 × 355 (3.36 × 5.10 × 13.97) (½ ATR, short-low)
ECD-870	7.55 (16.6)	101	157 × 183 × 362 (6.20 × 7.20 × 14.26)
EDC-850	—	—	Not included
FCC-850	0.95 (2.1)	*ICC	222 × 139 × 52 (8.73 × 5.48 × 2.03)
FDU-70	0.41 (0.8)	NA	69 × 121 × 121 (2.70 × 4.76 × 4.76)

Table 1-4. Unit Weight, Power Requirements, and Size (Cont).

UNIT	WEIGHT kg (lb)	28 V DC POWER (W)	SIZE (H × W × L) mm (in)
FMC-851A	0.68 (1.5)	*ICC	222 × 139 × 34 (8.73 × 5.48 × 1.35)
FMC-852A	0.41 (0.9)	*ICC	222 × 139 × 17 (8.73 × 5.48 × 0.65)
ICC-850A	3.50 (7.7)	*120	535 × 337 × 154 (21.05 × 13.25 × 6.05)
ICU-85	0.09 (0.2)	NA	65 × 94 × 15 (2.55 × 3.70 × 0.60)
IOC-851	0.41 (0.9)	*ICC	222 × 139 × 17 (8.73 × 5.48 × 0.65)
MFD-870	7.55 (16.6)	112	157 × 183 × 362 (6.20 × 7.20 × 14.26)
MSP-850A	0.32 (0.7)	2.5	51 × 106 × 145 (2.00 × 4.18 × 5.71)
ND-870	7.55 (16.6)	112	157 × 183 × 362 (6.20 × 7.20 × 14.26)
PFD-870	7.55 (16.6)	112	157 × 183 × 362 (6.20 × 7.20 × 14.26)
PWR-851A	0.50 (1.1)	*ICC	222 × 139 × 34 (8.73 × 5.48 × 1.35)
RAC-870	0.18 (0.4)	4	85 × 26 × 142 (3.33 × 1.04 × 5.58)
RTA-854	8.50 (18.7)	85	217 × 381 × 346 (8.54 × 15.00 × 13.64)
RTU-870A	1.05 (2.3)	9	116 × 86 × 163 (4.58 × 3.38 × 6.43)
SDD-640	1.27 (2.8)	11	85 × 61 × 355 (3.36 × 2.42 × 13.97) (¼ ATR, short-low)
SDU-640A	2.05 (4.5)	16	107 × 107 × 244 (4.20 × 4.20 × 9.59)
SVO/SMT-85A	2.41 (5.3)	77	86 × 109 × 199 (3.37 × 4.30 × 7.85)
SVO/SMT-85B	2.64 (5.8)	77	86 × 109 × 199 (3.37 × 4.30 × 7.85)
SVO/SMT-85C	3.0 (6.6)	77	86 × 109 × 199 (3.37 × 4.30 × 7.85)
TDR-90	1.59 (3.5)	25	85 × 61 × 355 (3.36 × 2.42 × 13.97) (¼ ATR, short-low)
VHF-422A	2.14 (4.7)	16 (rcv) 137 (xmt)	85 × 97 × 355 (3.36 × 3.80 × 13.97) (⅜ ATR, short-low)
VIR-432	2.05 (4.5)	17	85 × 97 × 355 (3.36 × 3.80 × 13.97) (⅜ ATR, short-low)
VLF-ANT	1.36 (3.0)	NA	61 × 178 × 178 (2.40 × 7.00 × 7.00)

*ICC-850A power includes requirements for resident IOC, PWR, FCC, FMC, and CDC units.

Table 1-5. Environmental Qualification Forms.

AAP-850		
CONDITIONS	DO-160B SECTION AND REV	EQUIPMENT QUALIFICATIONS CATEGORIES OF CONDUCTED TESTS
TEMPERATURE AND ALTITUDE	4.0	A2 and F1
TEMPERATURE (DEGREES C)		
LOW OPERATING TEMPERATURE		-20
HIGH OPERATING TEMPERATURE		+70
HIGH SHORT TIME		+70
LOSS OF COOLING		Not applicable
LOW GROUND SURVIVAL		-55
HIGH GROUND SURVIVAL		+85
ALTITUDE (FEET-THOUSANDS)		55
DECOMPRESSION		Paragraph 4.6.2, DO-160B
OVERPRESSURE		Paragraph 4.6.3, DO-160B
TEMPERATURE VARIATION	5.0	B, -20 to +70 degrees C
HUMIDITY	6.0	B, Level 1
SHOCK	7.0	
OPERATIONAL		Paragraph 7.2.1, DO-160B
CRASH SAFETY		Paragraph 7.3.1, DO-160B
VIBRATION	8.0	P, K, and S
EXPLOSION	9.0	E1
WATERPROOFNESS	10.0	X
FLUIDS SUSCEPTIBILITY	11.0	X
SAND AND DUST	12.0	X
FUNGUS	13.0	X
SALT SPRAY	14.0	X
MAGNETIC EFFECT	15.0	A
POWER INPUT	16.0	B and Z
VOLTAGE SPIKE CONDUCTED	17.0	A
AUDIO FREQUENCY CONDUCTED SUSCEPTIBILITY	18.0	Z
INDUCED SIGNAL SUSCEPTIBILITY	19.0	A
RADIO FREQUENCY SUSCEPTIBILITY	20.0	Z
RADIO FREQUENCY EMISSION	21.0	A

Table 1-5. Environmental Qualification Forms (Cont).

ADC-850 AND ADM-850		
CONDITIONS	DO-160B SECTION AND REV	EQUIPMENT QUALIFICATIONS CATEGORIES OF CONDUCTED TESTS
TEMPERATURE AND ALTITUDE	4.0	F2
TEMPERATURE (DEGREES C)		
LOW OPERATING TEMPERATURE		-55
HIGH OPERATING TEMPERATURE		+70
HIGH SHORT TIME		+70
LOSS OF COOLING		Not applicable
LOW GROUND SURVIVAL		-55
HIGH GROUND SURVIVAL		+85
ALTITUDE (FEET-THOUSANDS)		55
DECOMPRESSION		Paragraph 4.6.2, DO-160B
OVERPRESSURE		Paragraph 4.6.3, DO-160B
TEMPERATURE VARIATION	5.0	B, -55 to +70 degrees C
HUMIDITY	6.0	B, Level 1
SHOCK	7.0	
OPERATIONAL		Paragraph 7.2.1, DO-160B
CRASH SAFETY		Paragraph 7.3.1, DO-160B
VIBRATION	8.0	J and Y
EXPLOSION	9.0	E4
WATERPROOFNESS	10.0	X
FLUIDS SUSCEPTIBILITY	11.0	X
SAND AND DUST	12.0	X
FUNGUS	13.0	X
SALT SPRAY	14.0	X
MAGNETIC EFFECT	15.0	Z
POWER INPUT	16.0	B and Z
VOLTAGE SPIKE CONDUCTED	17.0	A
AUDIO FREQUENCY CONDUCTED SUSCEPTIBILITY	18.0	Z
INDUCED SIGNAL SUSCEPTIBILITY	19.0	Z
RADIO FREQUENCY SUSCEPTIBILITY	20.0	Z
RADIO FREQUENCY EMISSION	21.0	Z

Table 1-5. Environmental Qualification Forms (Cont).

ADF-462		
CONDITIONS	DO-160B SECTION AND REV	EQUIPMENT QUALIFICATIONS CATEGORIES OF CONDUCTED TESTS
TEMPERATURE AND ALTITUDE	4.0	A2 and E1
TEMPERATURE (DEGREES C)		
LOW OPERATING TEMPERATURE		-55
HIGH OPERATING TEMPERATURE		+70
HIGH SHORT TIME		+70
LOSS OF COOLING		Not applicable
LOW GROUND SURVIVAL		-55
HIGH GROUND SURVIVAL		+85
ALTITUDE (FEET-THOUSANDS)		70
DECOMPRESSION		Paragraph 4.6.2, DO-160B
OVERPRESSURE		Paragraph 4.6.3, DO-160B
TEMPERATURE VARIATION	5.0	B, -55 to +70 degrees C
HUMIDITY	6.0	B, Level 1
SHOCK	7.0	
OPERATIONAL		Paragraph 7.2.1, DO-160B
CRASH SAFETY		Paragraph 7.3.1, DO-160B
VIBRATION	8.0	J and Y
EXPLOSION	9.0	EZ
WATERPROOFNESS	10.0	X
FLUIDS SUSCEPTIBILITY	11.0	X
SAND AND DUST	12.0	X
FUNGUS	13.0	X
SALT SPRAY	14.0	X
MAGNETIC EFFECT	15.0	Z
POWER INPUT	16.0	B and Z
VOLTAGE SPIKE CONDUCTED	17.0	A
AUDIO FREQUENCY CONDUCTED SUSCEPTIBILITY	18.0	Z
INDUCED SIGNAL SUSCEPTIBILITY	19.0	A
RADIO FREQUENCY SUSCEPTIBILITY	20.0	A
RADIO FREQUENCY EMISSION	21.0	A

Table 1-5. Environmental Qualification Forms (Cont).

AHC-85D AND ICU-85		
CONDITIONS	DO-160A SECTION AND REV	EQUIPMENT QUALIFICATIONS CATEGORIES OF CONDUCTED TESTS
TEMPERATURE AND ALTITUDE	4.0	A2 and F2
TEMPERATURE (DEGREES C)		
LOW OPERATING TEMPERATURE		-55
HIGH OPERATING TEMPERATURE		+70
HIGH SHORT TIME		+70
LOSS OF COOLING		Not applicable
LOW GROUND SURVIVAL		-55
HIGH GROUND SURVIVAL		+85
ALTITUDE (FEET-THOUSANDS)		55
DECOMPRESSION		Paragraph 4.6.2, DO-160A
OVERPRESSURE		Paragraph 4.6.3, DO-160A
HUMIDITY	6.0	A
SHOCK	7.0	
OPERATIONAL		Paragraph 7.1, DO-160A
CRASH SAFETY		Paragraph 7.2, DO-160A
VIBRATION	8.0	J
EXPLOSION	9.0	E
WATERPROOFNESS	10.0	X
FLUIDS SUSCEPTIBILITY	11.0	X
SAND AND DUST	12.0	X
FUNGUS	13.0	X
SALT SPRAY	14.0	X
MAGNETIC EFFECT	15.0	A
POWER INPUT	16.0	B and Z
VOLTAGE SPIKE CONDUCTED	17.0	A
AUDIO FREQUENCY CONDUCTED SUSCEPTIBILITY	18.0	Z
INDUCED SIGNAL SUSCEPTIBILITY	19.0	AZ
RADIO FREQUENCY SUSCEPTIBILITY	20.0	AZ
RADIO FREQUENCY EMISSION	21.0	AZ

Table 1-5. Environmental Qualification Forms (Cont).

ALI-850A		
CONDITIONS	DO-160B SECTION AND REV	EQUIPMENT QUALIFICATIONS CATEGORIES OF CONDUCTED TESTS
TEMPERATURE AND ALTITUDE	4.0	A2 and D1
TEMPERATURE (DEGREES C)		
LOW OPERATING TEMPERATURE		-20
HIGH OPERATING TEMPERATURE		+70
HIGH SHORT TIME		+70
LOSS OF COOLING		Not applicable
LOW GROUND SURVIVAL		-55
HIGH GROUND SURVIVAL		+85
ALTITUDE (FEET-THOUSANDS)		50
DECOMPRESSION		Paragraph 4.6.2, DO-160B
OVERPRESSURE		Paragraph 4.6.3, DO-160B
TEMPERATURE VARIATION	5.0	B, -20 to +70 degrees C
HUMIDITY	6.0	B, Level 1
SHOCK	7.0	
OPERATIONAL		Paragraph 7.2.1, DO-160B
CRASH SAFETY		Paragraph 7.3.1, DO-160B
VIBRATION	8.0	P, K, and S
EXPLOSION	9.0	E1
WATERPROOFNESS	10.0	X
FLUIDS SUSCEPTIBILITY	11.0	X
SAND AND DUST	12.0	X
FUNGUS	13.0	X
SALT SPRAY	14.0	X
MAGNETIC EFFECT	15.0	A
POWER INPUT	16.0	B and Z
VOLTAGE SPIKE CONDUCTED	17.0	A
AUDIO FREQUENCY CONDUCTED SUSCEPTIBILITY	18.0	Z
INDUCED SIGNAL SUSCEPTIBILITY	19.0	A
RADIO FREQUENCY SUSCEPTIBILITY	20.0	Z
RADIO FREQUENCY EMISSION	21.0	A

Table 1-5. Environmental Qualification Forms (Cont).

ALT-55B		
CONDITIONS	DO-138 SECTION AND REV	EQUIPMENT QUALIFICATIONS CATEGORIES OF CONDUCTED TESTS
TEMPERATURE AND ALTITUDE	4.0	A and G
TEMPERATURE (DEGREES C)		
LOW OPERATING TEMPERATURE		-54
HIGH OPERATING TEMPERATURE		+71
HIGH SHORT TIME		+71
LOSS OF COOLING		Not applicable
LOW GROUND SURVIVAL		Not applicable
HIGH GROUND SURVIVAL		Not applicable
ALTITUDE (FEET-THOUSANDS)		45
DECOMPRESSION		Paragraph 4.3.2, DO-138
OVERPRESSURE		Paragraph 4.3.3, DO-138
HUMIDITY	5.0	A
SHOCK	6.0	
OPERATIONAL		Paragraph 6.1, DO-138
CRASH SAFETY		Paragraph 6.1, DO-138
VIBRATION	7.0	J and N
AUDIO FREQUENCY MAGNETIC SUSCEPTIBILITY	12.0	A
RADIO FREQUENCY SUSCEPTIBILITY	13.0	A
RADIO FREQUENCY EMMISSION		A
EXPLOSION	14.0	E
WATERPROOFNESS	15.0	X
FLUIDS SUSCEPTIBILITY	16.0	X
SAND AND DUST	17.0	X
FUNGUS	18.0	X
SALT SPRAY	19.0	X

Table 1-5. Environmental Qualification Forms (Cont).

ANT-462A AND ANT-462B		
CONDITIONS	DO-160B SECTION AND REV	EQUIPMENT QUALIFICATIONS CATEGORIES OF CONDUCTED TESTS
TEMPERATURE AND ALTITUDE	4.0	A2 and E1
TEMPERATURE (DEGREES C)		
LOW OPERATING TEMPERATURE		-55
HIGH OPERATING TEMPERATURE		+70
HIGH SHORT TIME		+70
LOSS OF COOLING		Not applicable
LOW GROUND SURVIVAL		-55
HIGH GROUND SURVIVAL		+85
ALTITUDE (FEET-THOUSANDS)		70
DECOMPRESSION		Paragraph 4.6.2, DO-160B
OVERPRESSURE		Paragraph 4.6.3, DO-160B
TEMPERATURE VARIATION	5.0	B, -55 to +70 degrees C
HUMIDITY	6.0	B, Level 1
SHOCK	7.0	
OPERATIONAL		Paragraph 7.2.1, DO-160B
CRASH SAFETY		Paragraph 7.3.1, DO-160B
VIBRATION	8.0	J and Y
EXPLOSION	9.0	E2
WATERPROOFNESS	10.0	S
FLUIDS SUSCEPTIBILITY	11.0	X
SAND AND DUST	12.0	X
FUNGUS	13.0	X
SALT SPRAY	14.0	X
MAGNETIC EFFECT	15.0	X
POWER INPUT	16.0	B and Z
VOLTAGE SPIKE CONDUCTED	17.0	A
AUDIO FREQUENCY CONDUCTED SUSCEPTIBILITY	18.0	Z
INDUCED SIGNAL SUSCEPTIBILITY	19.0	A
RADIO FREQUENCY SUSCEPTIBILITY	20.0	X
RADIO FREQUENCY EMISSION	21.0	A

Table 1-5. Environmental Qualification Forms (Cont).

APP-85D		
CONDITIONS	DO-160B SECTION AND REV	EQUIPMENT QUALIFICATIONS CATEGORIES OF CONDUCTED TESTS
TEMPERATURE AND ALTITUDE	4.0	A2 and F1
TEMPERATURE (DEGREES C)		
LOW OPERATING TEMPERATURE		-20
HIGH OPERATING TEMPERATURE		+70
HIGH SHORT TIME		+70
LOSS OF COOLING		Not applicable
LOW GROUND SURVIVAL		-55
HIGH GROUND SURVIVAL		+85
ALTITUDE (FEET-THOUSANDS)		55
DECOMPRESSION		Paragraph 4.6.2, DO-160B
OVERPRESSURE		Paragraph 4.6.3, DO-160B
TEMPERATURE VARIATION	5.0	B, -20 to +70 degrees C
HUMIDITY	6.0	B, Level 1
SHOCK	7.0	
OPERATIONAL		Paragraph 7.2.1, DO-160B
CRASH SAFETY		Paragraph 7.3.1, DO-160B
VIBRATION	8.0	P, K, and S
EXPLOSION	9.0	E1
WATERPROOFNESS	10.0	X
FLUIDS SUSCEPTIBILITY	11.0	X
SAND AND DUST	12.0	X
FUNGUS	13.0	X
SALT SPRAY	14.0	X
MAGNETIC EFFECT	15.0	Z
POWER INPUT	16.0	B and Z
VOLTAGE SPIKE CONDUCTED	17.0	A
AUDIO FREQUENCY CONDUCTED SUSCEPTIBILITY	18.0	Z
INDUCED SIGNAL SUSCEPTIBILITY	19.0	A
RADIO FREQUENCY SUSCEPTIBILITY	20.0	Z
RADIO FREQUENCY EMISSION	21.0	A

Table 1-5. Environmental Qualification Forms (Cont).

ASI-850A		
CONDITIONS	DO-160B SECTION AND REV	EQUIPMENT QUALIFICATIONS CATEGORIES OF CONDUCTED TESTS
TEMPERATURE AND ALTITUDE	4.0	A2 and D1
TEMPERATURE (DEGREES C)		
LOW OPERATING TEMPERATURE		-20
HIGH OPERATING TEMPERATURE		+70
HIGH SHORT TIME		+70
LOSS OF COOLING		Not applicable
LOW GROUND SURVIVAL		-55
HIGH GROUND SURVIVAL		+85
ALTITUDE (FEET-THOUSANDS)		50
DECOMPRESSION		Paragraph 4.6.2, DO-160B
OVERPRESSURE		Paragraph 4.6.3, DO-160B
TEMPERATURE VARIATION	5.0	B, -20 to +70 degrees C
HUMIDITY	6.0	B, Level 1
SHOCK	7.0	
OPERATIONAL		Paragraph 7.2.1, DO-160B
CRASH SAFETY		Paragraph 7.3.1, DO-160B
VIBRATION	8.0	P, K, and S
EXPLOSION	9.0	E1
WATERPROOFNESS	10.0	X
FLUIDS SUSCEPTIBILITY	11.0	X
SAND AND DUST	12.0	X
FUNGUS	13.0	X
SALT SPRAY	14.0	X
MAGNETIC EFFECT	15.0	Z
POWER INPUT	16.0	B and Z
VOLTAGE SPIKE CONDUCTED	17.0	A
AUDIO FREQUENCY CONDUCTED SUSCEPTIBILITY	18.0	Z
INDUCED SIGNAL SUSCEPTIBILITY	19.0	A
RADIO FREQUENCY SUSCEPTIBILITY	20.0	Z
RADIO FREQUENCY EMISSION	21.0	A

Table 1-5. Environmental Qualification Forms (Cont).

ATC-81		
CONDITIONS	DO-160 SECTION AND REV	EQUIPMENT QUALIFICATIONS CATEGORIES OF CONDUCTED TESTS
TEMPERATURE AND ALTITUDE	4.0	D2
TEMPERATURE (DEGREES C)		
LOW OPERATING TEMPERATURE		-55
HIGH OPERATING TEMPERATURE		+70
HIGH SHORT TIME		+70
LOW GROUND SURVIVAL		-55
HIGH GROUND SURVIVAL		+85
ALTITUDE (FEET-THOUSANDS)		50
DECOMPRESSION		Paragraph 4.6.2, DO-160
OVERPRESSURE		Paragraph 4.6.3, DO-160
HUMIDITY	6.0	A
SHOCK	7.0	
OPERATIONAL		Paragraph 7.1, DO-160
CRASH SAFETY		Paragraph 7.2, DO-160
VIBRATION	8.0	Y and J
EXPLOSION	9.0	X
WATERPROOFNESS	10.0	X
HYDRAULIC FLUID	11.0	X
SAND AND DUST	12.0	X
FUNGUS	13.0	X
SALT SPRAY	14.0	X
MAGNETIC EFFECT	15.0	Z
POWER INPUT	16.0	B
VOLTAGE SPIKE CONDUCTED	17.0	A
AUDIO FREQUENCY CONDUCTED SUSCEPTIBILITY	18.0	B
ELECTROMAGNETIC COMPATIBILITY	19.0, 20.0, 21.0	Z

Table 1-5. Environmental Qualification Forms (Cont).

CAD-870		
CONDITIONS	DO-160A SECTION AND REV	EQUIPMENT QUALIFICATIONS CATEGORIES OF CONDUCTED TESTS
TEMPERATURE AND ALTITUDE	4.0	A2 and E1
TEMPERATURE (DEGREES C)		
LOW OPERATING TEMPERATURE		-55
HIGH OPERATING TEMPERATURE		+70
HIGH SHORT TIME		+70
LOSS OF COOLING		Not applicable
LOW GROUND SURVIVAL		-55
HIGH GROUND SURVIVAL		+85
ALTITUDE (FEET-THOUSANDS)		70
DECOMPRESSION		Paragraph 4.6.2, DO-160A
OVERPRESSURE		Paragraph 4.6.3, DO-160A
HUMIDITY	6.0	B, Level 1
SHOCK	7.0	
OPERATIONAL		Paragraph 7.1, DO-160A
CRASH SAFETY		Paragraph 7.2, DO-160A
VIBRATION	8.0	J and Y
EXPLOSION	9.0	E
WATERPROOFNESS	10.0	X
FLUIDS SUSCEPTIBILITY	11.0	X
SAND AND DUST	12.0	X
FUNGUS	13.0	X
SALT SPRAY	14.0	X
MAGNETIC EFFECT	15.0	Z
POWER INPUT	16.0	B and Z
VOLTAGE SPIKE CONDUCTED	17.0	A
AUDIO FREQUENCY CONDUCTED SUSCEPTIBILITY	18.0	Z
INDUCED SIGNAL SUSCEPTIBILITY	19.0	A
RADIO FREQUENCY SUSCEPTIBILITY	20.0	A
RADIO FREQUENCY EMISSION	21.0	A

Table 1-5. Environmental Qualification Forms (Cont).

CDC-850A		
CONDITIONS	DO-160B SECTION AND REV	EQUIPMENT QUALIFICATIONS CATEGORIES OF CONDUCTED TESTS
TEMPERATURE AND ALTITUDE	4.0	A1 and F1
TEMPERATURE (DEGREES C)		
LOW OPERATING TEMPERATURE		-20
HIGH OPERATING TEMPERATURE		+55
HIGH SHORT TIME		+70
LOSS OF COOLING		Not applicable
LOW GROUND SURVIVAL		-55
HIGH GROUND SURVIVAL		+85
ALTITUDE (FEET-THOUSANDS)		55
DECOMPRESSION		Paragraph 4.6.2, DO-160B
OVERPRESSURE		Paragraph 4.6.3, DO-160B
TEMPERATURE VARIATION	5.0	B, -20 to +55 degrees C
HUMIDITY	6.0	B, Level 1
SHOCK	7.0	
OPERATIONAL		Paragraph 7.2.1, DO-160B
CRASH SAFETY		Paragraph 7.3.1, DO-160B
VIBRATION	8.0	J and Y
EXPLOSION	9.0	E1
WATERPROOFNESS	10.0	X
FLUIDS SUSCEPTIBILITY	11.0	X
SAND AND DUST	12.0	X
FUNGUS	13.0	X
SALT SPRAY	14.0	X
MAGNETIC EFFECT	15.0	Z
POWER INPUT	16.0	B and Z
VOLTAGE SPIKE CONDUCTED	17.0	A
AUDIO FREQUENCY CONDUCTED SUSCEPTIBILITY	18.0	Z
INDUCED SIGNAL SUSCEPTIBILITY	19.0	A
RADIO FREQUENCY SUSCEPTIBILITY	20.0	Z
RADIO FREQUENCY EMISSION	21.0	A

Table 1-5. Environmental Qualification Forms (Cont).

CDU-850A		
CONDITIONS	DO-160B SECTION AND REV	EQUIPMENT QUALIFICATIONS CATEGORIES OF CONDUCTED TESTS
TEMPERATURE AND ALTITUDE	4.0	A2 and F1
TEMPERATURE (DEGREES C)		
LOW OPERATING TEMPERATURE		-20
HIGH OPERATING TEMPERATURE		+70
HIGH SHORT TIME		+70
LOSS OF COOLING		Not applicable
LOW GROUND SURVIVAL		-55
HIGH GROUND SURVIVAL		+85
ALTITUDE (FEET-THOUSANDS)		55
DECOMPRESSION		Paragraph 4.6.2, DO-160B
OVERPRESSURE		Paragraph 4.6.3, DO-160B
TEMPERATURE VARIATION	5.0	B, -20 to +70 degrees C
HUMIDITY	6.0	B, Level 1
SHOCK	7.0	
OPERATIONAL		Paragraph 7.2.1, DO-160B
CRASH SAFETY		Paragraph 7.3.1, DO-160B
VIBRATION	8.0	P, K, and S
EXPLOSION	9.0	E1
WATERPROOFNESS	10.0	X
FLUIDS SUSCEPTIBILITY	11.0	X
SAND AND DUST	12.0	X
FUNGUS	13.0	X
SALT SPRAY	14.0	X
MAGNETIC EFFECT	15.0	A
POWER INPUT	16.0	B and Z
VOLTAGE SPIKE CONDUCTED	17.0	A
AUDIO FREQUENCY CONDUCTED SUSCEPTIBILITY	18.0	Z
INDUCED SIGNAL SUSCEPTIBILITY	19.0	A
RADIO FREQUENCY SUSCEPTIBILITY	20.0	Z
RADIO FREQUENCY EMISSION	21.0	A

Table 1-5. Environmental Qualification Forms (Cont).

CHP-850		
CONDITIONS	DO-160B SECTION AND REV	EQUIPMENT QUALIFICATIONS CATEGORIES OF CONDUCTED TESTS
TEMPERATURE AND ALTITUDE	4.0	A2 and F1
TEMPERATURE (DEGREES C)		
LOW OPERATING TEMPERATURE		-20
HIGH OPERATING TEMPERATURE		+70
HIGH SHORT TIME		+70
LOSS OF COOLING		Not applicable
LOW GROUND SURVIVAL		-55
HIGH GROUND SURVIVAL		+85
ALTITUDE (FEET-THOUSANDS)		55
DECOMPRESSION		Paragraph 4.6.2, DO-160B
OVERPRESSURE		Paragraph 4.6.3, DO-160B
TEMPERATURE VARIATION	5.0	B, -20 to +70 degrees C
HUMIDITY	6.0	B, Level 1
SHOCK	7.0	
OPERATIONAL		Paragraph 7.2.1, DO-160B
CRASH SAFETY		Paragraph 7.3.1, DO-160B
VIBRATION	8.0	P, K, and S
EXPLOSION	9.0	E1
WATERPROOFNESS	10.0	X
FLUIDS SUSCEPTIBILITY	11.0	X
SAND AND DUST	12.0	X
FUNGUS	13.0	X
SALT SPRAY	14.0	X
MAGNETIC EFFECT	15.0	A
POWER INPUT	16.0	B and Z
VOLTAGE SPIKE CONDUCTED	17.0	A
AUDIO FREQUENCY CONDUCTED SUSCEPTIBILITY	18.0	Z
INDUCED SIGNAL SUSCEPTIBILITY	19.0	A
RADIO FREQUENCY SUSCEPTIBILITY	20.0	Z
RADIO FREQUENCY EMISSION	21.0	A

Table 1-5. Environmental Qualification Forms (Cont).

DBU-850		
CONDITIONS	DO-160B SECTION AND REV	EQUIPMENT QUALIFICATIONS CATEGORIES OF CONDUCTED TESTS
TEMPERATURE AND ALTITUDE	4.0	A1 and F1
TEMPERATURE (DEGREES C)		
LOW OPERATING TEMPERATURE		-20
HIGH OPERATING TEMPERATURE		+55
HIGH SHORT TIME		+70
LOSS OF COOLING		Not applicable
LOW GROUND SURVIVAL		-55
HIGH GROUND SURVIVAL		+85
ALTITUDE (FEET-THOUSANDS)		55
DECOMPRESSION		Paragraph 4.6.2, DO-160B
OVERPRESSURE		Paragraph 4.6.3, DO-160B
TEMPERATURE VARIATION	5.0	B, -20 to +55 degrees C
HUMIDITY	6.0	A
SHOCK	7.0	
OPERATIONAL		Paragraph 7.2.1, DO-160B
CRASH SAFETY		Paragraph 7.3.1, DO-160B
VIBRATION	8.0	O
EXPLOSION	9.0	E1
WATERPROOFNESS	10.0	X
FLUIDS SUSCEPTIBILITY	11.0	X
SAND AND DUST	12.0	X
FUNGUS	13.0	X
SALT SPRAY	14.0	X
MAGNETIC EFFECT	15.0	Z
POWER INPUT	16.0	B and Z
VOLTAGE SPIKE CONDUCTED	17.0	A
AUDIO FREQUENCY CONDUCTED SUSCEPTIBILITY	18.0	Z
INDUCED SIGNAL SUSCEPTIBILITY	19.0	A
RADIO FREQUENCY SUSCEPTIBILITY	20.0	Z
RADIO FREQUENCY EMISSION	21.0	A

Table 1-5. Environmental Qualification Forms (Cont).

DME-442		
CONDITIONS	DO-160A SECTION AND REV	EQUIPMENT QUALIFICATIONS CATEGORIES OF CONDUCTED TESTS
TEMPERATURE AND ALTITUDE	4.0	A2 and E1
TEMPERATURE (DEGREES C)		
LOW OPERATING TEMPERATURE		-55
HIGH OPERATING TEMPERATURE		+70
HIGH SHORT TIME		+70
LOSS OF COOLING		Not applicable
LOW GROUND SURVIVAL		-55
HIGH GROUND SURVIVAL		+85
ALTITUDE (FEET-THOUSANDS)		70
DECOMPRESSION		Paragraph 4.6.2, DO-160A
OVERPRESSURE		Paragraph 4.6.3, DO-160A
HUMIDITY	6.0	B, Level 1
SHOCK	7.0	
OPERATIONAL		Paragraph 7.1, DO-160A
CRASH SAFETY		Paragraph 7.2, DO-160A
VIBRATION	8.0	J and Y
EXPLOSION	9.0	E
WATERPROOFNESS	10.0	X
FLUIDS SUSCEPTIBILITY	11.0	X
SAND AND DUST	12.0	X
FUNGUS	13.0	X
SALT SPRAY	14.0	X
MAGNETIC EFFECT	15.0	Z
POWER INPUT	16.0	B and Z
VOLTAGE SPIKE CONDUCTED	17.0	A
AUDIO FREQUENCY CONDUCTED SUSCEPTIBILITY	18.0	Z
INDUCED SIGNAL SUSCEPTIBILITY	19.0	Z
RADIO FREQUENCY SUSCEPTIBILITY	20.0	Z
RADIO FREQUENCY EMISSION	21.0	Z

Table 1-5. Environmental Qualification Forms (Cont).

ECD-870, MFD-870, ND-870, AND PFD-870		
CONDITIONS	DO-160B SECTION AND REV	EQUIPMENT QUALIFICATIONS CATEGORIES OF CONDUCTED TESTS
TEMPERATURE AND ALTITUDE	4.0	A1 and F1
TEMPERATURE (DEGREES C)		
LOW OPERATING TEMPERATURE		-20
HIGH OPERATING TEMPERATURE		+55
HIGH SHORT TIME		+70
LOSS OF COOLING		Not applicable
LOW GROUND SURVIVAL		-55
HIGH GROUND SURVIVAL		+85
ALTITUDE (FEET-THOUSANDS)		55
DECOMPRESSION		Paragraph 4.6.2, DO-160B
OVERPRESSURE		Paragraph 4.6.3, DO-160B
TEMPERATURE VARIATION	5.0	C, -20 to +55 degrees C
HUMIDITY	6.0	B, Level 1
SHOCK	7.0	
OPERATIONAL		Paragraph 7.2.1, DO-160B
CRASH SAFETY		Paragraph 7.3.1, DO-160B
VIBRATION	8.0	P, K, and S
EXPLOSION	9.0	E1
WATERPROOFNESS	10.0	X
FLUIDS SUSCEPTIBILITY	11.0	X
SAND AND DUST	12.0	X
FUNGUS	13.0	X
SALT SPRAY	14.0	X
MAGNETIC EFFECT	15.0	Z
POWER INPUT	16.0	B and Z
VOLTAGE SPIKE CONDUCTED	17.0	A
AUDIO FREQUENCY CONDUCTED SUSCEPTIBILITY	18.0	Z
INDUCED SIGNAL SUSCEPTIBILITY	19.0	A
RADIO FREQUENCY SUSCEPTIBILITY	20.0	Z
RADIO FREQUENCY EMISSION	21.0	A

Table 1-5. Environmental Qualification Forms (Cont).

FCC-850		
CONDITIONS	DO-160B SECTION AND REV	EQUIPMENT QUALIFICATIONS CATEGORIES OF CONDUCTED TESTS
TEMPERATURE AND ALTITUDE	4.0	A2 and F1
TEMPERATURE (DEGREES C)		
LOW OPERATING TEMPERATURE		-20
HIGH OPERATING TEMPERATURE		+70
HIGH SHORT TIME		+70
LOSS OF COOLING		Not applicable
LOW GROUND SURVIVAL		-55
HIGH GROUND SURVIVAL		+85
ALTITUDE (FEET-THOUSANDS)		55
DECOMPRESSION		Paragraph 4.6.2, DO-160B
OVERPRESSURE		Paragraph 4.6.3, DO-160B
TEMPERATURE VARIATION	5.0	C, -20 to +55 degrees C
HUMIDITY	6.0	B, Level 1
SHOCK	7.0	
OPERATIONAL		Paragraph 7.2.1, DO-160B
CRASH SAFETY		Paragraph 7.3.1, DO-160B
VIBRATION	8.0	J and Y
EXPLOSION	9.0	E1
WATERPROOFNESS	10.0	X
FLUIDS SUSCEPTIBILITY	11.0	X
SAND AND DUST	12.0	X
FUNGUS	13.0	X
SALT SPRAY	14.0	X
MAGNETIC EFFECT	15.0	Z
POWER INPUT	16.0	B and Z
VOLTAGE SPIKE CONDUCTED	17.0	A
AUDIO FREQUENCY CONDUCTED SUSCEPTIBILITY	18.0	Z
INDUCED SIGNAL SUSCEPTIBILITY	19.0	A
RADIO FREQUENCY SUSCEPTIBILITY	20.0	Z
RADIO FREQUENCY EMISSION	21.0	A

Table 1-5. Environmental Qualification Forms (Cont).

FDU-70		
CONDITIONS	DO-160A SECTION AND REV	EQUIPMENT QUALIFICATIONS CATEGORIES OF CONDUCTED TESTS
TEMPERATURE AND ALTITUDE	4.0	A2 and F2
TEMPERATURE (DEGREES C)		
LOW OPERATING TEMPERATURE		-55
HIGH OPERATING TEMPERATURE		+70
HIGH SHORT TIME		+70
LOSS OF COOLING		Not applicable
LOW GROUND SURVIVAL		-55
HIGH GROUND SURVIVAL		+85
ALTITUDE (FEET-THOUSANDS)		55
DECOMPRESSION		Paragraph 4.6.2, DO-160A
OVERPRESSURE		Paragraph 4.6.3, DO-160A
HUMIDITY	6.0	B, Level 1
SHOCK	7.0	
OPERATIONAL		Paragraph 7.1, DO-160A
CRASH SAFETY		Paragraph 7.2, DO-160A
VIBRATION	8.0	V AND R
EXPLOSION	9.0	E
WATERPROOFNESS	10.0	X
FLUIDS SUSCEPTIBILITY	11.0	X
SAND AND DUST	12.0	X
FUNGUS	13.0	X
SALT SPRAY	14.0	X
MAGNETIC EFFECT	15.0	Z
POWER INPUT	16.0	B and Z
VOLTAGE SPIKE CONDUCTED	17.0	A
AUDIO FREQUENCY CONDUCTED SUSCEPTIBILITY	18.0	Z
INDUCED SIGNAL SUSCEPTIBILITY	19.0	A
RADIO FREQUENCY SUSCEPTIBILITY	20.0	A
RADIO FREQUENCY EMISSION	21.0	A

Table 1-5. Environmental Qualification Forms (Cont).

FMC-851A AND FMC-852A		
CONDITIONS	DO-160B SECTION AND REV	EQUIPMENT QUALIFICATIONS CATEGORIES OF CONDUCTED TESTS
TEMPERATURE AND ALTITUDE	4.0	A1 and F1
TEMPERATURE (DEGREES C)		
LOW OPERATING TEMPERATURE		-20
HIGH OPERATING TEMPERATURE		+55
HIGH SHORT TIME		+70
LOSS OF COOLING		Not applicable
LOW GROUND SURVIVAL		-55
HIGH GROUND SURVIVAL		+85
ALTITUDE (FEET-THOUSANDS)		55
DECOMPRESSION		Paragraph 4.6.2, DO-160B
OVERPRESSURE		Paragraph 4.6.3, DO-160B
TEMPERATURE VARIATION	5.0	B, -20 to +55 degrees C
HUMIDITY	6.0	B, Level 1
SHOCK	7.0	
OPERATIONAL		Paragraph 7.2.1, DO-160B
CRASH SAFETY		Paragraph 7.3.1, DO-160B
VIBRATION	8.0	J and Y
EXPLOSION	9.0	E1
WATERPROOFNESS	10.0	X
FLUIDS SUSCEPTIBILITY	11.0	X
SAND AND DUST	12.0	X
FUNGUS	13.0	X
SALT SPRAY	14.0	X
MAGNETIC EFFECT	15.0	Z
POWER INPUT	16.0	B and Z
VOLTAGE SPIKE CONDUCTED	17.0	A
AUDIO FREQUENCY CONDUCTED SUSCEPTIBILITY	18.0	Z
INDUCED SIGNAL SUSCEPTIBILITY	19.0	A
RADIO FREQUENCY SUSCEPTIBILITY	20.0	Z
RADIO FREQUENCY EMISSION	21.0	A

Table 1-5. Environmental Qualification Forms (Cont).

ICC-850A		
CONDITIONS	DO-160B SECTION AND REV	EQUIPMENT QUALIFICATIONS CATEGORIES OF CONDUCTED TESTS
TEMPERATURE AND ALTITUDE	4.0	A2 and F1
TEMPERATURE (DEGREES C)		
LOW OPERATING TEMPERATURE		-20
HIGH OPERATING TEMPERATURE		+70
HIGH SHORT TIME		+70
LOSS OF COOLING		Not applicable
LOW GROUND SURVIVAL		-55
HIGH GROUND SURVIVAL		+85
ALTITUDE (FEET-THOUSANDS)		55
DECOMPRESSION		Paragraph 4.6.2, DO-160B
OVERPRESSURE		Paragraph 4.6.3, DO-160B
TEMPERATURE VARIATION	5.0	B, -20 to +55 degrees C
HUMIDITY	6.0	B, Level 1
SHOCK	7.0	
OPERATIONAL		Paragraph 7.2.1, DO-160B
CRASH SAFETY		Paragraph 7.3.1, DO-160B
VIBRATION	8.0	J and Y
EXPLOSION	9.0	E1
WATERPROOFNESS	10.0	X
FLUIDS SUSCEPTIBILITY	11.0	X
SAND AND DUST	12.0	X
FUNGUS	13.0	X
SALT SPRAY	14.0	X
MAGNETIC EFFECT	15.0	Z
POWER INPUT	16.0	B and Z
VOLTAGE SPIKE CONDUCTED	17.0	A
AUDIO FREQUENCY CONDUCTED SUSCEPTIBILITY	18.0	Z
INDUCED SIGNAL SUSCEPTIBILITY	19.0	A
RADIO FREQUENCY SUSCEPTIBILITY	20.0	Z
RADIO FREQUENCY EMISSION	21.0	A

Table 1-5. Environmental Qualification Forms (Cont).

IOC-851		
CONDITIONS	DO-160B SECTION AND REV	EQUIPMENT QUALIFICATIONS CATEGORIES OF CONDUCTED TESTS
TEMPERATURE AND ALTITUDE	4.0	A2 and F1
TEMPERATURE (DEGREES C)		
LOW OPERATING TEMPERATURE		-20
HIGH OPERATING TEMPERATURE		+70
HIGH SHORT TIME		+70
LOSS OF COOLING		Not applicable
LOW GROUND SURVIVAL		-55
HIGH GROUND SURVIVAL		+85
ALTITUDE (FEET-THOUSANDS)		55
DECOMPRESSION		Paragraph 4.6.2, DO-160B
OVERPRESSURE		Paragraph 4.6.3, DO-160B
TEMPERATURE VARIATION	5.0	B, -20 to +55 degrees C
HUMIDITY	6.0	B, Level 1
SHOCK	7.0	
OPERATIONAL		Paragraph 7.2.1, DO-160B
CRASH SAFETY		Paragraph 7.3.1, DO-160B
VIBRATION	8.0	J and Y
EXPLOSION	9.0	E1
WATERPROOFNESS	10.0	X
FLUIDS SUSCEPTIBILITY	11.0	X
SAND AND DUST	12.0	X
FUNGUS	13.0	X
SALT SPRAY	14.0	X
MAGNETIC EFFECT	15.0	Z
POWER INPUT	16.0	B and Z
VOLTAGE SPIKE CONDUCTED	17.0	A
AUDIO FREQUENCY CONDUCTED SUSCEPTIBILITY	18.0	Z
INDUCED SIGNAL SUSCEPTIBILITY	19.0	A
RADIO FREQUENCY SUSCEPTIBILITY	20.0	Z
RADIO FREQUENCY EMISSION	21.0	A

Table 1-5. Environmental Qualification Forms (Cont).

MSP-850A		
CONDITIONS	DO-160B SECTION AND REV	EQUIPMENT QUALIFICATIONS CATEGORIES OF CONDUCTED TESTS
TEMPERATURE AND ALTITUDE	4.0	A2 and F1
TEMPERATURE (DEGREES C)		
LOW OPERATING TEMPERATURE		-20
HIGH OPERATING TEMPERATURE		+70
HIGH SHORT TIME		+70
LOSS OF COOLING		Not applicable
LOW GROUND SURVIVAL		-55
HIGH GROUND SURVIVAL		+85
ALTITUDE (FEET-THOUSANDS)		55
DECOMPRESSION		Paragraph 4.6.2, DO-160B
OVERPRESSURE		Paragraph 4.6.3, DO-160B
TEMPERATURE VARIATION	5.0	B, -20 to +70 degrees C
HUMIDITY	6.0	B, Level 1
SHOCK	7.0	
OPERATIONAL		Paragraph 7.2.1, DO-160B
CRASH SAFETY		Paragraph 7.3.1, DO-160B
VIBRATION	8.0	P, K, and S
EXPLOSION	9.0	E1
WATERPROOFNESS	10.0	X
FLUIDS SUSCEPTIBILITY	11.0	X
SAND AND DUST	12.0	X
FUNGUS	13.0	X
SALT SPRAY	14.0	X
MAGNETIC EFFECT	15.0	Z
POWER INPUT	16.0	B and Z
VOLTAGE SPIKE CONDUCTED	17.0	A
AUDIO FREQUENCY CONDUCTED SUSCEPTIBILITY	18.0	Z
INDUCED SIGNAL SUSCEPTIBILITY	19.0	A
RADIO FREQUENCY SUSCEPTIBILITY	20.0	Z
RADIO FREQUENCY EMISSION	21.0	A

Table 1-5. Environmental Qualification Forms (Cont).

PWR-851A		
CONDITIONS	DO-160B SECTION AND REV	EQUIPMENT QUALIFICATIONS CATEGORIES OF CONDUCTED TESTS
TEMPERATURE AND ALTITUDE	4.0	A2 and F1
TEMPERATURE (DEGREES C)		
LOW OPERATING TEMPERATURE		-20
HIGH OPERATING TEMPERATURE		+70
HIGH SHORT TIME		+70
LOSS OF COOLING		Not applicable
LOW GROUND SURVIVAL		-55
HIGH GROUND SURVIVAL		+85
ALTITUDE (FEET-THOUSANDS)		55
DECOMPRESSION		Paragraph 4.6.2, DO-160B
OVERPRESSURE		Paragraph 4.6.3, DO-160B
TEMPERATURE VARIATION	5.0	B, -20 to +55 degrees C
HUMIDITY	6.0	B, Level 1
SHOCK	7.0	
OPERATIONAL		Paragraph 7.2.1, DO-160B
CRASH SAFETY		Paragraph 7.3.1, DO-160B
VIBRATION	8.0	J and Y
EXPLOSION	9.0	E1
WATERPROOFNESS	10.0	X
FLUIDS SUSCEPTIBILITY	11.0	X
SAND AND DUST	12.0	X
FUNGUS	13.0	X
SALT SPRAY	14.0	X
MAGNETIC EFFECT	15.0	Z
POWER INPUT	16.0	B and Z
VOLTAGE SPIKE CONDUCTED	17.0	A
AUDIO FREQUENCY CONDUCTED SUSCEPTIBILITY	18.0	Z
INDUCED SIGNAL SUSCEPTIBILITY	19.0	A
RADIO FREQUENCY SUSCEPTIBILITY	20.0	Z
RADIO FREQUENCY EMISSION	21.0	A

Table 1-5. Environmental Qualification Forms (Cont).

RAC-870		
CONDITIONS	DO-160A SECTION AND REV	EQUIPMENT QUALIFICATIONS CATEGORIES OF CONDUCTED TESTS
TEMPERATURE AND ALTITUDE	4.0	A2 and E1
TEMPERATURE (DEGREES C)		
LOW OPERATING TEMPERATURE		-55
HIGH OPERATING TEMPERATURE		+70
HIGH SHORT TIME		+70
LOSS OF COOLING		Not applicable
LOW GROUND SURVIVAL		-55
HIGH GROUND SURVIVAL		+85
ALTITUDE (FEET-THOUSANDS)		70
DECOMPRESSION		Paragraph 4.6.2, DO-160A
OVERPRESSURE		Paragraph 4.6.3, DO-160A
HUMIDITY	6.0	B, Level 1
SHOCK	7.0	
OPERATIONAL		Paragraph 7.1, DO-160A
CRASH SAFETY		Paragraph 7.2, DO-160A
VIBRATION	8.0	J and Y
EXPLOSION	9.0	E
WATERPROOFNESS	10.0	X
FLUIDS SUSCEPTIBILITY	11.0	X
SAND AND DUST	12.0	X
FUNGUS	13.0	X
SALT SPRAY	14.0	X
MAGNETIC EFFECT	15.0	Z
POWER INPUT	16.0	B and Z
VOLTAGE SPIKE CONDUCTED	17.0	A
AUDIO FREQUENCY CONDUCTED SUSCEPTIBILITY	18.0	Z
INDUCED SIGNAL SUSCEPTIBILITY	19.0	A
RADIO FREQUENCY SUSCEPTIBILITY	20.0	A
RADIO FREQUENCY EMISSION	21.0	A

Table 1-5. Environmental Qualification Forms (Cont).

RTA-854		
CONDITIONS	DO-160B SECTION AND REV	EQUIPMENT QUALIFICATIONS CATEGORIES OF CONDUCTED TESTS
TEMPERATURE AND ALTITUDE	4.0	F2
TEMPERATURE (DEGREES C)		
LOW OPERATING TEMPERATURE		-55
HIGH OPERATING TEMPERATURE		+70
HIGH SHORT TIME		+70
LOSS OF COOLING		Not applicable
LOW GROUND SURVIVAL		-55
HIGH GROUND SURVIVAL		+85
ALTITUDE (FEET-THOUSANDS)		70
DECOMPRESSION		Paragraph 4.6.2, DO-160B
OVERPRESSURE		Paragraph 4.6.3, DO-160B
TEMPERATURE VARIATION	5.0	B, -55 to +70 degrees C
HUMIDITY	6.0	B, Level 1
SHOCK	7.0	
OPERATIONAL		Paragraph 7.2.1, DO-160B
CRASH SAFETY		Paragraph 7.3.1, DO-160B
VIBRATION	8.0	J
EXPLOSION	9.0	E1
WATERPROOFNESS	10.0	X
FLUIDS SUSCEPTIBILITY	11.0	X
SAND AND DUST	12.0	X
FUNGUS	13.0	X
SALT SPRAY	14.0	X
MAGNETIC EFFECT	15.0	Z
POWER INPUT	16.0	B and Z
VOLTAGE SPIKE CONDUCTED	17.0	A
AUDIO FREQUENCY CONDUCTED SUSCEPTIBILITY	18.0	Z
INDUCED SIGNAL SUSCEPTIBILITY	19.0	A
RADIO FREQUENCY SUSCEPTIBILITY	20.0	Z
RADIO FREQUENCY EMISSION	21.0	A

Table 1-5. Environmental Qualification Forms (Cont).

RTU-870A		
CONDITIONS	DO-160A SECTION AND REV	EQUIPMENT QUALIFICATIONS CATEGORIES OF CONDUCTED TESTS
TEMPERATURE AND ALTITUDE	4.0	A2 and F1
TEMPERATURE (DEGREES C)		
LOW OPERATING TEMPERATURE		-20
HIGH OPERATING TEMPERATURE		+70
HIGH SHORT TIME		+70
LOSS OF COOLING		Not applicable
LOW GROUND SURVIVAL		-55
HIGH GROUND SURVIVAL		+85
ALTITUDE (FEET-THOUSANDS)		55
DECOMPRESSION		Paragraph 4.6.2, DO-160A
OVERPRESSURE		Paragraph 4.6.3, DO-160A
HUMIDITY	6.0	B, Level 1
SHOCK	7.0	
OPERATIONAL		Paragraph 7.1, DO-160A
CRASH SAFETY		Paragraph 7.2, DO-160A
VIBRATION	8.0	P, K, and S
EXPLOSION	9.0	E
WATERPROOFNESS	10.0	X
FLUIDS SUSCEPTIBILITY	11.0	X
SAND AND DUST	12.0	X
FUNGUS	13.0	X
SALT SPRAY	14.0	X
MAGNETIC EFFECT	15.0	Z
POWER INPUT	16.0	B and Z
VOLTAGE SPIKE CONDUCTED	17.0	A
AUDIO FREQUENCY CONDUCTED SUSCEPTIBILITY	18.0	Z
INDUCED SIGNAL SUSCEPTIBILITY	19.0	Z
RADIO FREQUENCY SUSCEPTIBILITY	20.0	Z
RADIO FREQUENCY EMISSION	21.0	Z

Table 1-5. Environmental Qualification Forms (Cont).

SDD-640		
CONDITIONS	DO-160B SECTION AND REV	EQUIPMENT QUALIFICATIONS CATEGORIES OF CONDUCTED TESTS
TEMPERATURE AND ALTITUDE	4.0	F2
TEMPERATURE (DEGREES C)		
LOW OPERATING TEMPERATURE		-55
HIGH OPERATING TEMPERATURE		+70
HIGH SHORT TIME		+70
LOSS OF COOLING		Not applicable
LOW GROUND SURVIVAL		-55
HIGH GROUND SURVIVAL		+85
ALTITUDE (FEET-THOUSANDS)		55
DECOMPRESSION		Paragraph 4.6.2, DO-160B
OVERPRESSURE		Paragraph 4.6.3, DO-160B
TEMPERATURE VARIATION	5.0	B, -55 to +70 degrees C
HUMIDITY	6.0	B, Level 1
SHOCK	7.0	
OPERATIONAL		Paragraph 7.2.1, DO-160B
CRASH SAFETY		Paragraph 7.3.1, DO-160B
VIBRATION	8.0	J and Y
EXPLOSION	9.0	E1
WATERPROOFNESS	10.0	X
FLUIDS SUSCEPTIBILITY	11.0	X
SAND AND DUST	12.0	X
FUNGUS	13.0	X
SALT SPRAY	14.0	X
MAGNETIC EFFECT	15.0	Z
POWER INPUT	16.0	B and Z
VOLTAGE SPIKE CONDUCTED	17.0	A
AUDIO FREQUENCY CONDUCTED SUSCEPTIBILITY	18.0	Z
INDUCED SIGNAL SUSCEPTIBILITY	19.0	A
RADIO FREQUENCY SUSCEPTIBILITY	20.0	Z
RADIO FREQUENCY EMISSION	21.0	A

Table 1-5. Environmental Qualification Forms (Cont).

SDU-640A		
CONDITIONS	DO-160B SECTION AND REV	EQUIPMENT QUALIFICATIONS CATEGORIES OF CONDUCTED TESTS
TEMPERATURE AND ALTITUDE	4.0	A2 and D1
TEMPERATURE (DEGREES C)		
LOW OPERATING TEMPERATURE		-20
HIGH OPERATING TEMPERATURE		+70
HIGH SHORT TIME		+70
LOSS OF COOLING		Not applicable
LOW GROUND SURVIVAL		-55
HIGH GROUND SURVIVAL		+85
ALTITUDE (FEET-THOUSANDS)		50
DECOMPRESSION		Paragraph 4.6.2, DO-160B
OVERPRESSURE		Paragraph 4.6.3, DO-160B
TEMPERATURE VARIATION	5.0	B, -20 to +70 degrees C
HUMIDITY	6.0	B, Level 1
SHOCK	7.0	
OPERATIONAL		Paragraph 7.2.1, DO-160B
CRASH SAFETY		Paragraph 7.3.1, DO-160B
VIBRATION	8.0	P, K, and S
EXPLOSION	9.0	E1
WATERPROOFNESS	10.0	X
FLUIDS SUSCEPTIBILITY	11.0	X
SAND AND DUST	12.0	X
FUNGUS	13.0	X
SALT SPRAY	14.0	X
MAGNETIC EFFECT	15.0	A
POWER INPUT	16.0	B and Z
VOLTAGE SPIKE CONDUCTED	17.0	A
AUDIO FREQUENCY CONDUCTED SUSCEPTIBILITY	18.0	Z
INDUCED SIGNAL SUSCEPTIBILITY	19.0	A
RADIO FREQUENCY SUSCEPTIBILITY	20.0	Z
RADIO FREQUENCY EMISSION	21.0	A

Table 1-5. Environmental Qualification Forms (Cont).

SMT-85A, SMT-85B, AND SMT-85C		
CONDITIONS	DO-160A SECTION AND REV	EQUIPMENT QUALIFICATIONS CATEGORIES OF CONDUCTED TESTS
TEMPERATURE AND ALTITUDE	4.0	A2 and F2
TEMPERATURE (DEGREES C)		
LOW OPERATING TEMPERATURE		-55
HIGH OPERATING TEMPERATURE		+70
HIGH SHORT TIME		+70
LOSS OF COOLING		Not applicable
LOW GROUND SURVIVAL		-55
HIGH GROUND SURVIVAL		+85
ALTITUDE (FEET-THOUSANDS)		55
DECOMPRESSION		Paragraph 4.6.2, DO-160A
OVERPRESSURE		Paragraph 4.6.3, DO-160A
HUMIDITY	6.0	B, Level 1
SHOCK	7.0	
OPERATIONAL		Paragraph 7.1, DO-160A
CRASH SAFETY		Paragraph 7.2, DO-160A
VIBRATION	8.0	R AND Y
EXPLOSION	9.0	X
WATERPROOFNESS	10.0	X
FLUIDS SUSCEPTIBILITY	11.0	X
SAND AND DUST	12.0	X
FUNGUS	13.0	X
SALT SPRAY	14.0	X
MAGNETIC EFFECT	15.0	X
POWER INPUT	16.0	X
VOLTAGE SPIKE CONDUCTED	17.0	X
AUDIO FREQUENCY CONDUCTED SUSCEPTIBILITY	18.0	X
INDUCED SIGNAL SUSCEPTIBILITY	19.0	X
RADIO FREQUENCY SUSCEPTIBILITY	20.0	X
RADIO FREQUENCY EMISSION	21.0	X

Table 1-5. Environmental Qualification Forms (Cont).

SVO-85A, SVO-85B, AND SVO-85C		
CONDITIONS	DO-160A SECTION AND REV	EQUIPMENT QUALIFICATIONS CATEGORIES OF CONDUCTED TESTS
TEMPERATURE AND ALTITUDE	4.0	A2 and F2
TEMPERATURE (DEGREES C)		
LOW OPERATING TEMPERATURE		-55
HIGH OPERATING TEMPERATURE		+70
HIGH SHORT TIME		+70
LOSS OF COOLING		Not applicable
LOW GROUND SURVIVAL		-55
HIGH GROUND SURVIVAL		+85
ALTITUDE (FEET-THOUSANDS)		55
DECOMPRESSION		Paragraph 4.6.2, DO-160A
OVERPRESSURE		Paragraph 4.6.3, DO-160A
HUMIDITY	6.0	B, Level 1
SHOCK	7.0	
OPERATIONAL		Paragraph 7.1, DO-160A
CRASH SAFETY		Paragraph 7.2, DO-160A
VIBRATION	8.0	R AND Y
EXPLOSION	9.0	E
WATERPROOFNESS	10.0	X
FLUIDS SUSCEPTIBILITY	11.0	X
SAND AND DUST	12.0	X
FUNGUS	13.0	X
SALT SPRAY	14.0	X
MAGNETIC EFFECT	15.0	A
POWER INPUT	16.0	B and Z
VOLTAGE SPIKE CONDUCTED	17.0	A
AUDIO FREQUENCY CONDUCTED SUSCEPTIBILITY	18.0	Z
INDUCED SIGNAL SUSCEPTIBILITY	19.0	Z
RADIO FREQUENCY SUSCEPTIBILITY	20.0	Z
RADIO FREQUENCY EMISSION	21.0	Z

Table 1-5. Environmental Qualification Forms (Cont).

TDR-90		
CONDITIONS	DO-138 SECTION AND REV	EQUIPMENT QUALIFICATIONS CATEGORIES OF CONDUCTED TESTS
TEMPERATURE AND ALTITUDE	4.0	A and D
TEMPERATURE (DEGREES C)		
LOW OPERATING TEMPERATURE		-54
HIGH OPERATING TEMPERATURE		+55
HIGH SHORT TIME		+71
LOSS OF COOLING		Not applicable
LOW GROUND SURVIVAL		Not applicable
HIGH GROUND SURVIVAL		Not applicable
ALTITUDE (FEET-THOUSANDS)		45
DECOMPRESSION		Paragraph 4.3.2, DO-138
OVERPRESSURE		Paragraph 4.3.3, DO-138
HUMIDITY	5.0	A
SHOCK	6.0	
OPERATIONAL		Paragraph 6.1, DO-138
CRASH SAFETY		Paragraph 6.1, DO-138
VIBRATION	7.0	J and N (G)
AUDIO FREQUENCY MAGNETIC SUSCEPTIBILITY	12.0	A
RADIO FREQUENCY SUSCEPTIBILITY	13.0	A
RADIO FREQUENCY EMISSION		A
EXPLOSION	14.0	E
WATERPROOFNESS	15.0	X
FLUIDS SUSCEPTIBILITY	16.0	X
SAND AND DUST	17.0	X
FUNGUS	18.0	X
SALT SPRAY	19.0	X

Table 1-5. Environmental Qualification Forms (Cont).

VHF-422A		
CONDITIONS	DO-160A SECTION AND REV	EQUIPMENT QUALIFICATIONS CATEGORIES OF CONDUCTED TESTS
TEMPERATURE AND ALTITUDE	4.0	A2 and E1
TEMPERATURE (DEGREES C)		
LOW OPERATING TEMPERATURE		-55
HIGH OPERATING TEMPERATURE		+70
HIGH SHORT TIME		+70
LOSS OF COOLING		Not applicable
LOW GROUND SURVIVAL		-55
HIGH GROUND SURVIVAL		+85
ALTITUDE (FEET-THOUSANDS)		70
DECOMPRESSION		Paragraph 4.6.2, DO-160A
OVERPRESSURE		Paragraph 4.6.3, DO-160A
HUMIDITY	6.0	B, Level 1
SHOCK	7.0	
OPERATIONAL		Paragraph 7.1, DO-160A
CRASH SAFETY		Paragraph 7.2, DO-160A
VIBRATION	8.0	J and Y
EXPLOSION	9.0	E
WATERPROOFNESS	10.0	X
FLUIDS SUSCEPTIBILITY	11.0	X
SAND AND DUST	12.0	X
FUNGUS	13.0	X
SALT SPRAY	14.0	X
MAGNETIC EFFECT	15.0	Z
POWER INPUT	16.0	B and Z
VOLTAGE SPIKE CONDUCTED	17.0	A
AUDIO FREQUENCY CONDUCTED SUSCEPTIBILITY	18.0	Z
INDUCED SIGNAL SUSCEPTIBILITY	19.0	A
RADIO FREQUENCY SUSCEPTIBILITY	20.0	A
RADIO FREQUENCY EMISSION	21.0	A

Table 1-5. Environmental Qualification Forms (Cont).

VIR-432		
CONDITIONS	DO-160A SECTION AND REV	EQUIPMENT QUALIFICATIONS CATEGORIES OF CONDUCTED TESTS
TEMPERATURE AND ALTITUDE	4.0	A2 and E1
TEMPERATURE (DEGREES C)		
LOW OPERATING TEMPERATURE		-55
HIGH OPERATING TEMPERATURE		+70
HIGH SHORT TIME		+70
LOSS OF COOLING		Not applicable
LOW GROUND SURVIVAL		-55
HIGH GROUND SURVIVAL		+85
ALTITUDE (FEET-THOUSANDS)		70
DECOMPRESSION		Paragraph 4.6.2, DO-160A
OVERPRESSURE		Paragraph 4.6.3, DO-160A
HUMIDITY	6.0	B, Level 1
SHOCK	7.0	
OPERATIONAL		Paragraph 7.1, DO-160A
CRASH SAFETY		Paragraph 7.1, DO-160A
VIBRATION	8.0	J and Y
EXPLOSION	9.0	E
WATERPROOFNESS	10.0	X
FLUIDS SUSCEPTIBILITY	11.0	X
SAND AND DUST	12.0	X
FUNGUS	13.0	X
SALT SPRAY	14.0	X
MAGNETIC EFFECT	15.0	Z
POWER INPUT	16.0	B and Z
VOLTAGE SPIKE CONDUCTED	17.0	A
AUDIO FREQUENCY CONDUCTED SUSCEPTIBILITY	18.0	Z
INDUCED SIGNAL SUSCEPTIBILITY	19.0	A
RADIO FREQUENCY SUSCEPTIBILITY	20.0	A
RADIO FREQUENCY EMISSION	21.0	A

Table 1-6. Associated Equipment.

EQUIPMENT	COLLINS PART NUMBER	DESCRIPTION
IMT-870	622-7396-002	Dual mounting tray for the PFD-870, ND-870, ECD-870, and MFD-870
UMT-11	622-5211-003	¼ ATR mount for the SDD-640 and TDR-90
UMT-12	622-5212-003	⅜ ATR mount for the VHF-422A, VIR-432, ADF-462, and ALT-55B
UMT-13	622-5213-003	½ ATR mount for the ADC-850 and DME-442
UMT-16A	622-8304-001	½ ATR AHC mount for the AHC-85D
NA	653-9015-001	Mounting tray for the RAC-870
NA	653-9015-002	Mounting tray for the CAD-870
NA	270-1306-030	Mounting tray for the CMA-764
SMT-85A	622-5028-101/201	2-inch capstan mount for the SVO-85A aileron servo
SMT-85B	622-5029-101/201	2-inch capstan mount for the SVO-85B rudder servo
SMT-85C	622-6718-101/201	2-inch capstan mount for the SVO-85C elevator servo

Table 1-7. Abbreviations, Acronyms, and Mnemonics.

TERM	MEANING
AAP	Altitude awareness panel
ADAS	Aircraft data acquisition system
ADC	Air data computer
ADF	Automatic direction finder or ADF receiver
ADM	Air data module
ADV	Advance
AFX	Autofeather
AHC	Attitude heading computer
AHRS	Attitude heading reference system
AIL	Aileron
ALI	Altitude indicator
ALT	Altitude or radio altimeter
ALTS	Altitude select

Table 1-7. Abbreviations, Acronyms, and Mnemonics (Cont).

TERM	MEANING
ALT SEL	Altitude, preselect
ANG	Angular
ANT	Antenna
AP	Autopilot
APP	Autopilot panel
APPR	Approach
ARP	Airport reference point
ARPT	Airport
ASI	Airspeed indicator
ATC	Air traffic control, transponder, or automatic trim coupler
ATT	Attitude
AUT	Automatic or autotune
B/C	Back course (localizer)
BAL	Balance (raster intensity control)
BARO	Barometric pressure
BFO	Beat frequency oscillator
BNK	Bank
BRG	Bearing
BRT	Brightness (stroke intensity control)
BZL	Bezel
CAD	Transponder adapter
CAL	Calibrate
CAS	Caution advisory system
CDC	Control display coupler
CDU	Control display unit
CH	Channel
CHP	Course/heading panel
CLB	Climb
CLR	Clear
CMA	VLF/omega receiver
CMPST	Composite
COM	Communication
COMM	Communication
CRS	Course
CRT	Cathode ray tube

Table 1-7. Abbreviations, Acronyms, and Mnemonics (Cont).

TERM	MEANING
CTL	Control
DA	Drift angle
DAU	Data acquisition unit
DBU	Data base unit
DEG	Degree
DESC	Descend
DEST	Destination
DEV	Deviation
DH	Decision height
DIR	Direct
DIS	Distance
DISC	Disconnect
DIST	Distance
DME	Distance measuring equipment or DME transceiver
DME HLD	DME hold
DN	Down
DR	Dead reckoning
DSPL	Display
DTA	Data
DTK	Desired track
ECD	Engine/caution display
EDC	Engine data concentrator
EFD	Electronic flight display
EICAS	Engine instrument/caution advisory system
ELEV	Elevator
EMG	Emergency
EMI	Electromagnetic interference
ENG	Engine or engage
ENT	Enter
ETA	Estimated time of arrival
ETE	Estimated time enroute
FAR	Federal air regulation
FCC	Flight control computer
FCS	Flight control system
FD	Flight director

Table 1-7. Abbreviations, Acronyms, and Mnemonics (Cont).

TERM	MEANING
FDU	Flux detector unit
FL	Flight level
FLT PLAN	Flight plan
FMC	Flight management computer
FMS	Flight management system
FPL	Flight plan
FPM	Feet per minute
FR	From
FT	Feet
GA	Go-around
GCS	Ground clutter suppression
GMT	Greenwich mean time
GND	Ground
GND CLTR SPRS	Ground clutter suppression
GS	Glideslope or ground speed
H	Hold
HDG	Heading
HF	High frequency
HLD	Hold
HSI	Horizontal situation indicator
IAPS	Integrated Avionics Processor System
IAS	Indicated airspeed
ICC	IAPS card cage
ICU	Internal compensation unit
ID	Ident
IDX	Index
ILS	Instrument landing system
IM	Inner marker
IMT	Instrument mounting tray
IOAT	Indicated outside air temperature
IOC	Input/output concentrator
IRS	Inertial reference system
ISA	International standard atmosphere temperature
ITT	Innerstage turbine temperature
IVS	Initial vertical speed

Table 1-7. Abbreviations, Acronyms, and Mnemonics (Cont).

TERM	MEANING
JS	Joystick
KT	Knots
LAT	Latitude
LG	Leg
LIN	Linear course deviation
LOC	Localizer
LON	Longitude
LRN	Long-range navigation
LRU	Line replaceable unit
LTR	Letter
MAN	Manual
MAG	Magnetic
MB	Marker beacon or millibars
MDA	Minimum decision altitude
MEM	Memory module
MFD	Multifunction display
MIC	Microphone
MKR BCN	Marker beacon
MLS	Microwave landing system
MM	Middle marker
MNU	Menu
MSG	Message
MSP	Mode select panel
N1	Engine gas compressor speed (engine pressure)
NAV	Navigation
NCD	No computed data
ND	Navigation display
NDB	Nondirectional beacon
NM	Nautical miles
OAT	Corrected outside air temperature
OM	Outer marker
PFD	Primary flight display
PR	Propeller speed
PRE	Preset or preselect
PRES	Pressure or present

Table 1-7. Abbreviations, Acronyms, and Mnemonics (Cont).

TERM	MEANING
PRESS	Pressure
PROF	Profile
PROP	Propeller speed
PSI	Pounds per square inch
PTCH	Pitch
PWR	IAPS power supply
RA	Radio altitude
RAC	Radio altitude converter
RAD	Radial
RAD RMT	Radio remote
RCL	Recall
RDR	Radar
REINIT	Reinitialize
REV	Reversion
RMI	Radio magnetic indicator
RNG	Range
RPM	Revolution per minute
RPT	Reporting altitude
RPT ALT	Reporting altitude
RTA	Weather radar receiver/transmitter/antenna
RTN	Return
RTU	Radio tuning unit
RUD	Rudder
SAT	Static air temperature
SDD	Sensor display driver
SDU	Sensor display unit
SEL	Select
SKP	Skip
SLW	Slew
SMT	Servo mounting tray
SQ	Squelch
STAB	Stabilization
STBY	Standby
STD	Standard
SVO	Servo

Table 1-7. Abbreviations, Acronyms, and Mnemonics (Cont).

TERM	MEANING
SXTK	Parallel offset track
SYNC	Synchronize
SYS CTRL	System control
TAS	True airspeed
TAT	Total air temperature
TDR	Transponder
TEMP	Temperature
TGT	Target
TGT ALT	Target altitude
TK	Track
TKE	Track angle error
TOD	Top of descent
TORQ	Torque
TQ	Engine torque
TRB	Turbulence
TRK	Track
TRU	True
TUN DSBL	Tune disable
TURB	Turbulence
TSO	Technical standard order
TST	Test
TT	Interturbine temperature
TTG	Time to go
UHF	Ultrahigh frequency
UMT	Universal mounting tray
USTAB	Unstabilized
VAR	Variation
VERT	Vertical
VFE	Airspeed, max flap extension
VHF	Very high frequency or VHF communications transceiver
VIR	VHF navigation receiver
VLF	Very low frequency or VLF navigation receiver
VLO	Airspeed, max gear extended
VMC	Airspeed, minimum control
VMO	Airspeed, max operating

Table 1-7. Abbreviations, Acronyms, and Mnemonics (Cont).

TERM	MEANING
VSO	Airspeed, stall/gear/flaps extended
VNAV	Vertical navigation
VOR	VHF omnirange
VS	Vertical speed
VSR	Vertical speed required
VTK	Vertical track
VYSE	Airspeed, best rate of climb
WPT	Waypoint
WX	Weather radar
WXR	Weather radar
X	Cross-side
XFER	Transfer
XFR	Transfer
XTK	Crosstrack
YD	Yaw damper

Federal Communications Commission
Gettysburg, PA 17326

INSTRUCTIONS
APPLICATION FOR AIRCRAFT RADIO STATION LICENSE

Approved by OMB
3060-0040
Expires 3/31/89

General Information

A. **CORRECT FORM**
Use FCC Form 404 to apply for

- A new station license when the station aboard an aircraft is first licensed or the ownership of the aircraft is changed and the previous owner is not to continue as the licensee of the station
- A modified station license when the licensee remains the same, but the operation is to be different from that provided in the license. If the licensee's name or address changes, notify the Commission by letter (see Part 87 of the Commission's Rules).

To renew your station license, use FCC Form 405-B, which is normally sent to you before the license expires, or use FCC Form 404.

Do not use FCC Form 404 when applying for transmitters or radio frequencies in radio service other than aviation services (e.g., Amateur, Industrial) even though these facilities may be placed aboard the aircraft.

B. **NUMBER OF APPLICATIONS**
Submit a separate form for each aircraft unless the application is for a fleet license. See Part 87 of the Commission's Rules for those eligible for fleet license.

C. **COMMISSION RULES AND REGULATIONS**
Before preparing this application, applicant should refer to Part 87, "Aviation Services". Since prices are subject to change without notice, it is suggested that you contact the United States Government Printing Office, Washington, DC 20402, or telephone 202-783-3238 for the correct price.

D. **FEES**
No application fee required at this time.

E. **MAILING APPLICATION**
Place First Class Postage (necessary due to the size) on the reverse side of the application and mail.

Filling Out the Application Form

ITEM 1. The FAA registration number must be entered on applications submitted for a new station license except those for which FAA registration is not required or those submitted for a fleet or portable license. If exempt from FAA registration, provide an explanation in ITEM 8. When a fleet or portable license is involved, a control number will be assigned by the Commission. When applying for a modification or renewal of an existing aircraft radio station license, the FAA registration number or the control number appearing on the license must be entered.

ITEM 2. Check "No" if you are applying for a license for only one aircraft. Check "Yes" if you are applying for a fleet license and give the number of aircraft in the fleet including any planned expansion during the five year license term. Refer to Part 87 of the Commission's Rules for those eligible for fleet license.

ITEM 3. Check the type of applicant you are.

ITEM 4. Enter the legal name of the person or entity applying for the license. If you are an individual doing business in your name, enter your full individual name. Enter last name first, then first name, and middle name last.

Example: Smith, John Albert

If you are an individual doing business under a firm or trade name (sole proprietorship), enter both your name and the firm or trade name.

Example: Doe, John Henry, DBA
Circle Construction Company

Do not apply in the name of more than one individual, except on behalf of a legally recognized partnership. If the applicant is a partnership, list the name of the partner whose address appears in ITEM 5. List the other partners in ITEM 8. If you are a member of a partnership doing business under a firm or company name, insert the full name of each partner having an interest in the business, and the firm or company trade name.

Example: Doe, John Henry & Doe, Richard Robert
DBA Circle Construction Company

If you are filing as a corporation, insert the exact name of the corporation as it appears in the Articles of Incorporation. If you are an unincorporated association, insert the name of the association as it appears in the Articles of Association or By-laws. If you are a Governmental entity, insert the name of the Governmental entity having jurisdiction of the station.

Example: City of Baltimore, MD — State of California
County of Fairfax, VA — Commonwealth of Pennsylvania

ITEM 5. Enter a permanent mailing address in the United States to which the radio station authorization and any future correspondence related to your station is to be mailed.

ITEM 6A-6B. Check the desired frequencies based on the following information.

Private Aircraft: These frequencies include those normally available for air traffic control, aeronautical advisory, aeronautical multicom, ground traffic control, and navigation. Refer to Part 87 of the Commission's Rules for the specific frequencies available. Private aircraft frequencies are available to any aircraft except those weighing more than 12,500 pounds which are used in carrying passengers or cargo for hire. Do not apply for private aircraft frequencies if the aircraft falls within the latter category.

Air Carrier: Refer to Part 87 of the Commission's Rules for the specific frequencies available.

DO NOT CHECK BOTH PRIVATE AND AIR CARRIER FREQUENCIES.

Flight Test HF or VHF or both: Submit a statement showing that the applicant is a manufacturer of aircraft or major aircraft components. Any request for VHF flight test frequencies must be accompanied by AFTRCC coordination.

Portable: Submit a statement that it is necessary for the applicant to move the transmitting equipment aboard various U.S. registered aircraft.

Other: Specify under "Other" any frequencies you required and which are not regularly available for use in accordance with the provisions of Part 87 of the Commission's Rules. Each request for "Other" frequencies must be accompanied by a statement showing the need for assignment, including reference to any governmental contracts which may be involved and a description of the proposed use. The emission, power, points of communication and area of proposed operation should be included in the statement. In certain cases, AFTRCC coordination is required.

ITEM 7. Check the type of application this is.

ITEM 8. Use this space for any additional data required.

ITEM 10. APPLICATION MUST BE SIGNED AND DATED.

DETACH HERE—DO NOT MAIL THIS PART

Federal Communications Commission
Gettysburg, PA 17326

APPLICATION FOR AIRCRAFT RADIO STATION LICENSE

Approved by OMB
3060-0040
Expires 3/31/89

- Read instructions above before completing application.
- Use typewriter or print clearly in ink.
- Sign and date application.
- Place First Class Postage on the reverse side of the card and mail.

1. FAA Registration or FCC Control Number. (If FAA Registration is not required for your aircraft, explain in item 8.) N

2. Is application for a fleet license? ☐ No ☐ Yes
If yes, give the number of aircraft in fleet, including planned expansion . . . . . .

3. Type of applicant (check one)
☐ I—Individual ☐ C—Corporation
☐ P—Partnership ☐ D—Individual with Business Name
☐ A—Association ☐ G—Governmental entity

4. Applicant/Licensee Name (See Instructions)

5. Mailing Address (Number and Street, P.O. Box or Route No., City, State, ZIP Code)

6. Frequencies Requested (check appropriate box(es) in 6A and/or 6B.)

6A. DO NOT CHECK BOTH BOXES
☐ A—Private Aircraft ☐ C—Air Carrier

6B. ADDITIONAL INFORMATION IS REQUIRED IF YOU CHECK HERE (See Instructions)
☐ T—Flight Test HF ☐ V—Flight Test VHF ☐ P—Portable ☐ O—Other (Specify)

7. Application is for:
☐ New Station ☐ Renewal
☐ Modification

8. Answer space for any required statements

9. READ CAREFULLY BEFORE SIGNING: 1. Applicant waives any claim to the use of any particular frequency regardless of prior use by license or otherwise. 2. Applicant will have unlimited access to the radio equipment and will control access to exclude unauthorized persons. 3. Neither applicant nor any member thereof is a foreign government or representative thereof. 4. Applicant certifies that all statements made in this application and attachments are true, complete, correct and made in good faith. 5. Applicant certifies that the signature is that of the individual, or partner, or officer or duly authorized employee of a corporation, or officer who is a member of an unincorporated association, or appropriate elected or appointed official on behalf of a governmental entity.

WILLFUL FALSE STATEMENTS MADE ON THIS FORM ARE PUNISHABLE BY FINE AND/OR IMPRISONMENT U.S. CODE TITLE 18, SECTION 1001	10. Signature	Date

FCC 404
March 1987

Application for Aircraft Radio Station License (FCC 404)
Figure 1-3 (Sheet 1 of 2)

Federal Communications Commission
Gettysburg, PA 17326

TEMPORARY AIRCRAFT RADIO STATION OPERATING AUTHORITY

Approved by OMB
3060-0040
Expires 3/31/89

Use this form if you want a temporary operating authority while your regular application, FCC Form 404, is being processed by the FCC. This authority authorizes the use of transmitters operating on the appropriate frequencies listed in Part 87 of the Commission's Rules.

- DO NOT use this form if you already have a valid aircraft station license.
- DO NOT use this form when renewing your aircraft license.
- DO NOT use this form if you are applying for a fleet license.
- DO NOT use this form if you do not have an FAA Registration Number.

ALL APPLICANTS MUST CERTIFY:

1. I am not a representative of a foreign government.
2. I have applied for an Aircraft Radio Station License by mailing a completed FCC Form 404 to the Federal Communications Commission, P.O. Box 1030, Gettysburg, PA 17326.
3. I have not been denied a license or had my license revoked by the FCC.
4. I am not the subject of any adverse legal action concerning the operation of a radio station.
5. I will ensure that the Aircraft Radio Station will be operated by an individual holding the proper class of license or permit required by the Commission's Rules.

WILLFUL FALSE STATEMENTS VOID THIS PERMIT AND ARE PUNISHABLE BY FINE AND/OR IMPRISONMENT.	
Name of Applicant (Print or Type)	Signature of Applicant
FAA Registration Number (Use as Temporary Call Sign)	Date FCC Form 404 Mailed

Your authority to operate your Aircraft Radio Station is subject to all applicable laws, treaties and regulations and is subject to the right of control of the Government of the United States. This authority is valid for 90 days from the date the FCC Form 404 is mailed.

YOU MUST POST THIS TEMPORARY OPERATING AUTHORITY ON BOARD YOUR AIRCRAFT

NOTICE TO INDIVIDUALS REQUIRED BY PRIVACY ACT OF 1974 AND THE PAPERWORK REDUCTION ACT OF 1980

Sections 301, 303 and 308 of the Communications Act of 1934, as amended, (licensing powers) authorize the FCC to request the information on this application. The purpose of the information is to determine your eligibility for a license. The information will be used by FCC staff to evaluate the application, to determine station location, to provide information for enforcement and rulemaking proceedings and to maintain a current inventory of licensees. No license can be granted unless all information requested is provided. Your response is required to obtain this authorization.

FCC 404-A
March 1987

DETACH HERE—DO NOT MAIL THIS PART

FROM:

PLACE STAMP HERE
The Post Office will not deliver mail without postage

First Class Mail

Federal Communications Commission

P.O. Box 1030

Gettysburg, PA 17326

Application for Aircraft Radio Station License (FCC 404-A)
Figure 1-8 (Sheet 2 of 2)

FEDERAL COMMUNICATIONS COMMISSION
Restricted Radiotelephone Operator Permit Application

FCC 753

Approved by OMB
3060-0049
Expires 5/31/88

- Complete Parts 1 and 2—Print or Type
- Mail Parts 1 and 2 in an envelope to FCC, P.O. Box 1050, Gettysburg, PA 17326.
- If you need a temporary Permit, complete Part 3.
- No examination is required.
- Before completing this form, see other side.

① Name–Last First M.I.

② Address Number & Street

City State ZIP Code

③ Date of Birth Use numerals— MONTH DAY YEAR

I Certify that:

- I can keep at least a rough written log.
- I am familiar with the provisions of applicable treaties, laws, and rules and regulations governing the radio station which I will operate.
- I can speak and hear.
- I am legally eligible for employment in the United States.
- I need this permit because I intend to engage in international flights or voyages (Aviation and Marine Services only).
- The statements made on this application and any attachments are true to the best of my knowledge.

A WILLFUL FALSE STATEMENT IS A CRIMINAL OFFENSE
U.S. Code, Title 18, Section 1001.

④ Signature Date

FCC Form 753-Part 1
June 1985

DO NOT DETACH

Federal Communications Commission
P.O. Box 1050, Gettysburg, PA 17326

Official Business
Penalty for Private Use–$300

UNITED STATES OF AMERICA
Federal Communications Commission
Restricted Radiotelephone Operator Permit

⑤ Print or Type Your Full Name

is authorized to operate any radio station which may be operated by a person holding this class of license. This permit is issued in conformity with Paragraphs 3454 and 3945 of the Radio Regulations, Geneva 1979, and is valid for the lifetime of the holder unless suspended by the FCC

Not valid without FCC Seal

⑥ Signature (Keep your signature within the box)

FCC Form 753-Part 2

U.S. MAIL

POSTAGE AND FEES PAID
FEDERAL COMMUNICATIONS COMMISSION
FCC 615

⑦ Print *Your* Name and Address Above
DO NOT ADDRESS TO THE F.C.C.

FCC Form 753-Part 2
June 1985

FEDERAL COMMUNICATIONS COMMISSION
Temporary Restricted Radiotelephone Operator Permit

Approved by OMB
3060-0049
Expires 5/31/88

If you need a temporary Restricted Radiotelephone Operator Permit while your application is being processed, do the following:

- Complete Parts 1 & 2 of this form and mail to the FCC.
- Complete this part of the form → and keep it

If you have done the above, you now hold a temporary Restricted Radiotelephone Operator Permit. This is your temporary permit DO NOT MAIL IT TO THE FCC

This permit is valid for 60 days from the date Parts 1 and 2 of this form were mailed to the FCC

You must obey all applicable laws, treaties, and regulations

Read, Fill in the Blanks, and Sign:

Name

Date FCC Form 753, Parts 1 & 2 mailed to FCC

I Certify that:

- The above information is true.
- I have completed and signed FCC Form 753, Parts 1 & 2, and mailed it to the FCC.
- I have never had a license suspended or revoked by the FCC.

Signature Date

If you cannot certify to all of the above, you are not eligible for a temporary permit

DO NOT MAIL THIS PART 3 OF THE FORM
IT IS YOUR TEMPORARY PERMIT

FCC Form 753-Part 3
June 1985

Restricted Radiotelephone Operator Permit Application (FCC 753)
Figure 1-4 (Sheet 1 of 2)

Note: All U.S.citizens are considered, for the purposes of this application, to be legally eligible for employment in the United States.

If you are not a U.S. citizen, ***and*** you are not eligible for employment in the United States, but you need an operator permit because—

1. You hold an FAA pilot certificate and need to operate aircraft radio stations—

OR

2. You hold an FCC radio station license issued in your name, and will use the permit for operation of that particular station—

THEN use FCC Form 755 to apply for the permit, instead of this form.

Notice to Individuals Required by the Privacy Act and the Paperwork Reduction Act

The Communications Act of 1934 authorizes solicitation of personal information requested in this application. The information is to be used principally to determine if the benefits requested are consistent with the public interest, convenience and necessity.

Commission staff will routinely use the information to evaluate and render a judgement as to whether to grant or deny this application.

If all of the requested information is not provided, the application may be returned without action or processing may be delayed while a request is made to provide the missing information. Therefore, extreme care should be exercised in making certain that all the information requested is provided.

Limited file material may be included in the Commission Computer Facility. Where a possible violation of law is indicated, the records may, as a matter of routine use, be referred to the Commission's General Counsel and forwarded to other appropriate agencies charged with responsibilities of investigating or prosecuting such violations.

The Foregoing Notice is Required by the Privacy Act of 1974, p.l. 93-579, December 31, 1974, 5 U.S.C. 552a (e) (3), and the Paperwork Reduction Act of 1980, P.L. 96-511, December 11, 1980, 44 U.S.C. 3504 (C) (3) (C).

(cut on this line)

Terms and Conditions

It is your responsibility to know the laws, treaties, rules, and regulations which currently govern any station you operate. Do not operate any radio transmitter unless such operation is authorized by a valid radio station license. Operation of an unlicensed radio transmitter is a violation of Section 301 of the Communications Act of 1934, as amended, and is punishable by fine and/or imprisonment.

As a licensed radio operator, it is illegal for you to:

- willfully interfere with any radio communication or signal
- transmit false or deceptive signals or communications by radio.
- falsely identify a radio station by transmitting a call sign which has not been assigned by proper authority to that station.
- transmit unidentified radio communications or signals.
- without authorization, divulge, publish, or use for your benefit or the benefit of another not entitled thereto, the existence, contents, substance, purport, effect, or meaning of any interstate or foreign communications by radio, other than transmissions intended for the use of the general public, transmissions relating to ships, aircraft, vehicles, or persons in distress, or transmissions by an amateur or citizens band radio operator.

Terms and Conditions

It is your responsibility to know the laws, treaties, rules, and regulations which currently govern any station you operate. Do not operate any radio transmitter unless such operation is authorized by a valid radio station license. Operation of an unlicensed radio transmitter is a violation of Section 301 of the Communications Act of 1934, as amended, and is punishable by fine and/or imprisonment.

As a licensed radio operator, it is illegal for you to:

- willfully interfere with any radio communication or signal.
- transmit false or deceptive signals or communications by radio.
- falsely identify a radio station by transmitting a call sign which has not been assigned by proper authority to that station.
- transmit unidentified radio communications or signals.
- without authorization, divulge, publish, or use for your benefit or the benefit of another not entitled thereto, the existence, contents, substance, purport, effect, or meaning of any interstate or foreign communications by radio, other than transmissions intended for the use of the general public, transmissions relating to ships, aircraft, vehicles, or persons in distress, or transmissions by an amateur or citizens band radio operator.

FCC Form 753
June 1985

Restricted Radiotelephone Operator Permit Application (FCC 753)
Figure 1-4 (Sheet 2 of 2)

AC 20-68B

DATE 8/8/80

ADVISORY CIRCULAR

DEPARTMENT OF TRANSPORTATION
Federal Aviation Administration
Washington, D.C.

Subject: RECOMMENDED RADIATION SAFETY PRECAUTIONS FOR GROUND OPERATION OF AIRBORNE WEATHER RADAR

1. PURPOSE. This circular sets forth recommended radiation safety precautions to be taken by personnel when operating airborne weather radar on the ground.

2. CANCELLATION. AC 20-68A, dated April 11, 1975, is canceled.

3. RELATED READING MATERIAL.

a. Barnes and Taylor, Radiation Hazards and Protection (London: George Newnes Limited, 1963), p. 211.

b. U.S. Department of Health, Education and Welfare, Public Health Service, Consumer Protection and Environmental Health Service, "Environmental health microwaves, ultraviolet radiation and radiation from lasers and television receivers - An Annotated Bibliography," FS 2.300: RH-35, Washington, U.S. Government Printing Office, pp. 56-57.

c. Mumford, W. W., "Some technical aspects of microwave radiation hazards," Proceedings of the IRE, Washington, U.S. Government Printing Office, February 1961, pp. 427-447.

4. BACKGROUND. Dangers from ground operation of airborne weather radar include the possibility of human body damage and ignition of combustible materials by radiated energy. Low tolerance parts of the body include the eyes and testes.

5. PRECAUTIONS. Management and supervisory personnel should establish procedures for advising personnel of dangers from operating airborne weather radars on the ground. Precautionary signs should be displayed in affected areas to alert personnel of ground testing.

a. General.

(1) Airborne weather radar should be operated on the ground only by qualified personnel.

Initiated by: AFO-512

FAA Advisory Circular 20-68B
Figure 1-5 (Sheet 1 of 6)

(2) Installed airborne radar should not be operated while the aircraft is in a hangar or other enclosure unless the radar transmitter is not operating, or the energy is directed toward an absorption shield which dissipates the radio frequency energy. Otherwise, radiation within the enclosure can be reflected throughout the area.

b. Body Damage. To prevent possible human body damage, the following precautions should be taken:

(1) Personnel should never stand nearby and in front of a radar antenna which is transmitting. When the antenna is not scanning, the danger increases.

(2) A recommended safe distance from operating airborne weather radars should be established. A safe distance can be determined by using the equations in Appendix 1 or the graphs of figures 1 and 2. This criterion is now accepted by many industrial organizations and is based on limiting exposure of humans to an average power density not greater than 10 milliwatts per square centimeter.

(3) Personnel should be advised to avoid the end of an open waveguide unless the radar is turned off.

(4) Personnel should be advised to avoid looking into a waveguide, or into the open end of a coaxial connector or line connector to a radar transmitter output, as severe eye damage may result.

(5) Personnel should be advised that when high power radar transmitters are operated out of their protective cases, X-rays may be emitted. Stray X-rays may emanate from the glass envelope type pulser, oscillator, clipper, or rectifier tubes, as well as magnetrons.

c. Combustible Materials. To prevent possible fuel ignition, an installed airborne weather radar should not be operated while an aircraft is being refueled or defueled.

M. C. BEARD
Director of Airworthiness

FAA Advisory Circular 20-68B
Figure 1-5 (Sheet 2 of 6)

APPENDIX 1. SAFE DISTANCE DETERMINATION

The following information can be used in establishing a minimum safe distance from the antenna for personnel near an operating airborne weather radar. An applicable graph is shown in figure 1.

1. NEAR FIELD/FAR FIELD INTERSECTION. The distance to the near field/far field intersection can be computed by:

$$R_i = \frac{G\lambda}{8\pi} \qquad (1)$$

where R_i = Intersection distance from the antenna (in meters)
λ = Wave length (in meters)
G = Antenna gain

2. DISTANCE TO 10 mw/cm^2 SAFE LIMIT. For a far field power density of 10 mw/cm^2, the distance (in meters) from the antenna may be calculated by:

$$R_s = \sqrt{GP/400\pi} \qquad (2)$$

where R_s = The minimum safe distance in meters.
P = Transmitted average power in watts.
G = Antenna gain

An applicable graph is shown in figure 2.

3. PROCEDURES. The above formulas or the graphs of figures 1 and 2 may be used to determine the minimum safe distance. In either case the following procedures apply:

a. Determine the distance (R_i) to the near field/far field intersection (paragraph 1).

b. Determine the distance (R_s) to 10 mw/cm^2 power density (paragraph 2).

c. If the distance (R_s) determined in 3b above is less than (R_i) found in 3 a above, use distance (R_i) as the minimum safe distance.

d. If the distance (R_s) determined in 3b above is greater than (R_i) found in 3a above, use distance (R_s) as the minimum safe distance.

1

FAA Advisory Circular 20-68B
Figure 1-5 (Sheet 3 of 6)

4. EXAMPLE

a. Data. The following is typical data for an airborne weather radar.

Antenna Diameter	:	22 inches = 56 cm
Transmitter Frequency	:	9375 $\pm$ 30 MHz
Wave Length	:	3.2 cm
Pulse Length	:	1.5 microseconds (search)
Pulse Repetition	:	400 Hz
Peak Power	:	40 kilowatts
Average Power	:	24 watts (search)
Antenna Gain	:	1000 (30db)

b. Calculations.

(1) Distance (R_i) to the near field/far field intersection.

$$R_i = \frac{G\lambda}{8\pi}$$
$$= 1000 \times \frac{0.032}{8\pi}$$
$$= 1.27 \text{ meters} = 4.2 \text{ feet}$$

(2) Distance (R_s) to 10 mw/cm^2 safe limit.

$$R_s = \sqrt{GP/400\pi}$$
$$= \sqrt{1000 \times 24/400\pi}$$
$$= 4.37 \text{ meters} = 14.3 \text{ feet}$$

The distance (R_s) is greater than (R_i), therefore, the minimum safe distance is 14.3 feet.

2

FAA Advisory Circular 20-68B
Figure 1-5 (Sheet 4 of 6)

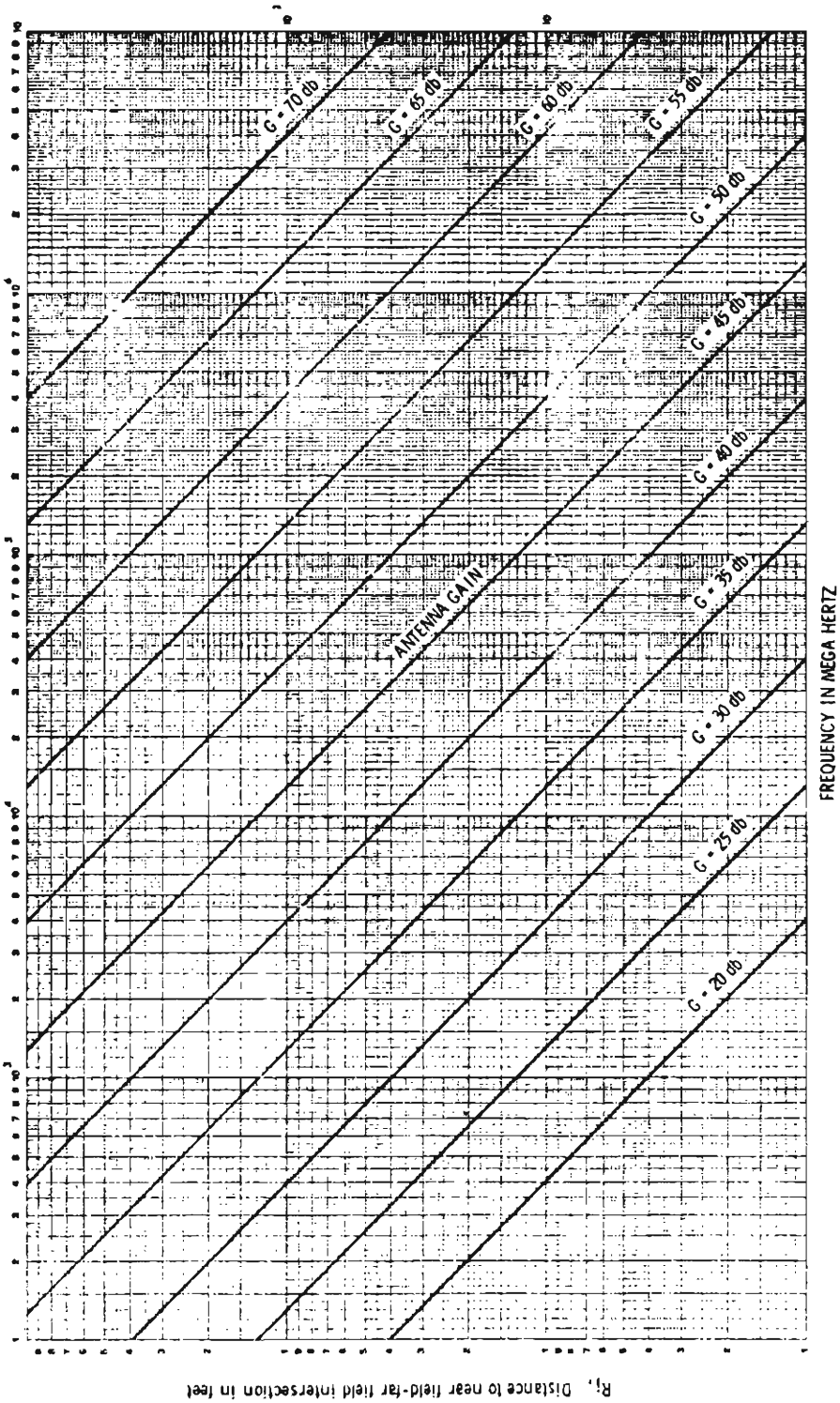

Distance to Intersection of Near and Far Fields

FIGURE 1

FAA Advisory Circular 20-68B
Figure 1-5 (Sheet 5 of 6)

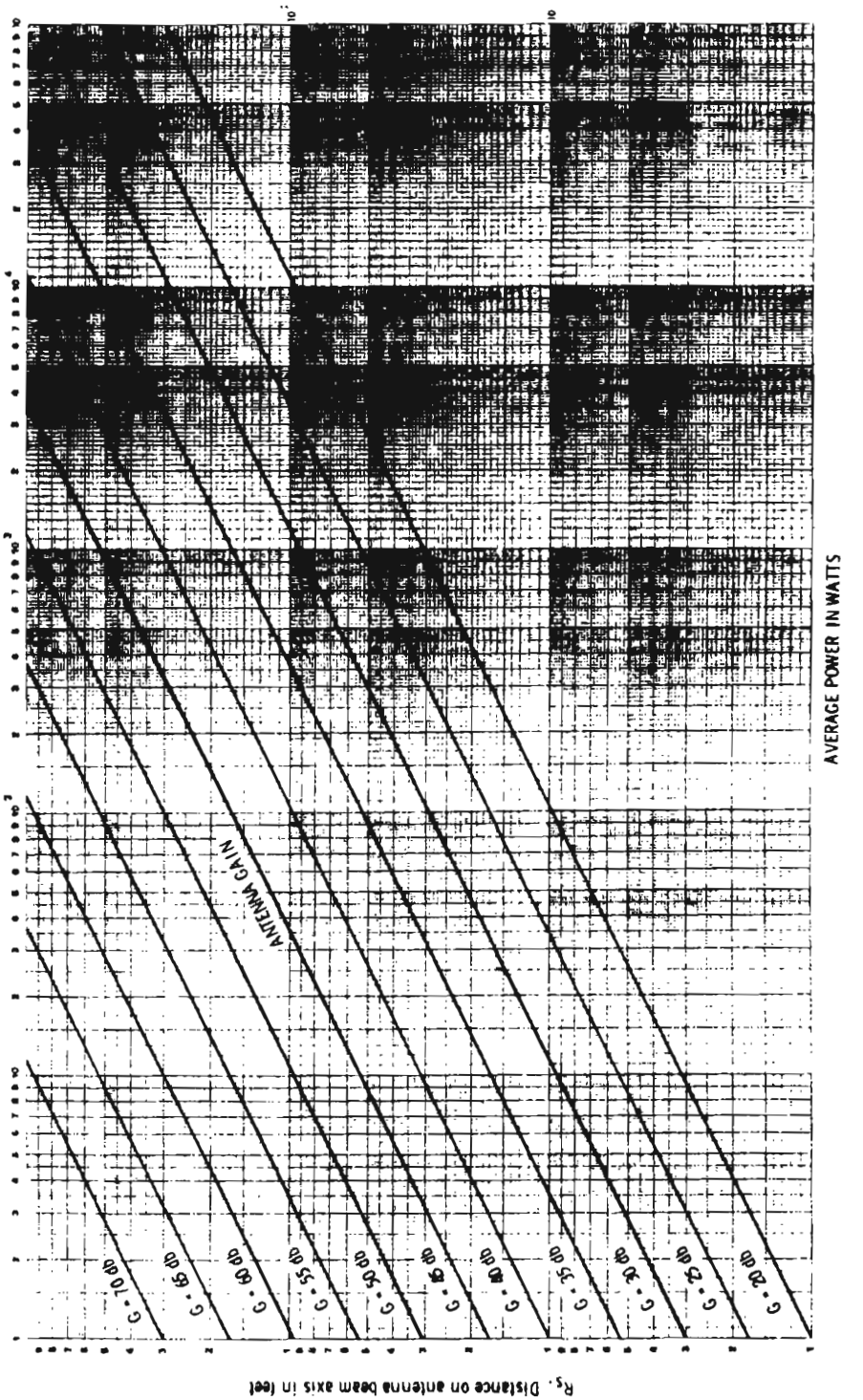

Distance on Antenna Beam Axis for Power Density = 10mw/cm²

FIGURE 2

☆U.S. GOVERNMENT PRINTING OFFICE: 1980-311-586/278

FAA Advisory Circular 20-68B
Figure 1-5 (Sheet 6 of 6)

AC NO: 43-14
DATE: 2/24/77

ADVISORY CIRCULAR

DEPARTMENT OF TRANSPORTATION
FEDERAL AVIATION ADMINISTRATION

SUBJECT: MAINTENANCE OF WEATHER RADAR RADOMES

1. PURPOSE. This advisory circular provides guidance material useful to repair facilities in the maintenance of weather radar radomes.

2. CANCELLATION. AC 43-202, dated 6/11/65, and AC 90-20, dated 11/12/64, are cancelled.

3. GENERAL. A radome is a covering whose primary purpose is to protect a radar antenna from the elements. It is a part of the airframe and, therefore, should have certain physical as well as electrical properties. Physically, a radome should be strong enough to withstand the airloads that it will encounter and it should be contoured to minimize drag. These properties vary with the shape, design speed, and size of the airplane on which it is to be installed. Electrically, a radome should permit the passage of the radar's transmitted signals and return echoes with minimum distortion and absorption. In order to do this, it should have a certain electrical thickness. The electrical thickness of a radome is related to the physical thickness, operating frequency, and the types of material and construction used. This relationship is defined by a number of complex mathematical equations which are of interest only to radome design engineers. These equations show that, for given physical properties, a radome should have a certain electrical thickness for a certain narrow range of operating frequencies. (This is the reason why C-band radomes will not give optimum performance with X-band radars and vice versa.) Also, a very small variation in physical thickness may cause a sizable variation in electrical thickness. Radar efficiency, definition, and accuracy of display depend upon a clear, nondistorted, reflection-free antenna view through the radome. Consequently, a radome should be precisely built for optimum performance.

4. RADOME CHARACTERISTICS. There are two general types of radomes, the "thin wall" and "sandwich" types. Thin wall radomes are considered to be thin relative to the wavelength of the radar. They are generally useful when the radar frequency is low enough to permit a skin thickness which will satisfy the structural requirements. Sandwich radomes consist of two

Initiated by: AFS-804

FAA Advisory Circular 43-14
Figure 1-6 (Sheet 1 of 3)

or more plastic skins separated by a dielectric core. The core may consist of honeycomb plastic sections, hollow flutes, or foam plastic. The dielectric and separation of the skins will depend upon the wavelength of the radar frequency or frequencies.

5. RADOME DAMAGE. Probably the most frequent damage to radomes is holes in the structure caused by static discharges. These can be large holes that are readily apparent, or small pin holes that are almost imperceptible. Any hole, regardless of size, can cause major damage to a radome since moisture can enter the radome wall and cause internal delamination. If the moisture freezes, more serious damage may occur. If enough moisture collects, the radiation pattern will be distorted and the transmitted signals and return echoes seriously attenuated. Ram air through a hole can delaminate and break the inner surface of the radome and result in separation of the skins or faces of the material from the core, weakening the radome structure. Other types of damage are characterized as dents and scratches caused by impact with stones and birds and improper handling of the radome when it is removed for maintenance of the radar antenna. This type of damage is easily found by inspection.

6. MAINTENANCE.

a. High performance radar radomes are very precisely constructed and sometimes the slightest change in their physical characteristics, such as excessive layers of paint, can adversely affect radar system performance. All repairs to radomes, no matter how minor, should return the radome to its original or properly altered condition, both electrically and structurally. The performance of proper maintenance to precision radomes requires special knowledge and techniques and the use of proper tools and materials. An improper minor repair can eventually lead to an expensive major repair. A radome having undergone major repairs should be tested to ascertain that its electrical properties have not been impaired. The testing of radomes requires test equipment that usually is found only in repair facilities specializing in radome maintenance. Even minor repairs may affect one or all of the following:

(1) Transmissivity. Which is the ability of a radome to pass radar energy through it.

(2) Reflection. Which is the return or reflection of the outgoing radar energy from the radome back into the antenna and waveguide system.

(3) Diffraction. Which is the bending of the radar energy as it passes through the radome.

b. These electrical properties, when altered by improper repair, may cause loss of signal, distortion and displacement of targets, and can clutter the display to obscure the target. Poor radome

FAA Advisory Circular 43-14
Figure 1-6 (Sheet 2 of 3)

electrical performance can produce numerous problems which may appear to be symptoms of deficiencies in other units of the radar system. The following are examples of improper repair:

(1) Use of wrong materials - not compatible with original radome materials.

(2) Patches of different thickness.

(3) Poor fabrication techniques.

(4) Nonvoid-free patches.

(5) Repairs overlapping.

(6) Holes plugged with resin, screws, metal, wood, and plastic plugs.

(7) Cuts or cracks simply coated with resin.

(8) Tape (including electrical tape) over hole or crack and covered with resin.

(9) Oversize patches.

(10) Too much or too little resin.

(11) Exterior coatings - too many coats, too thick, uneven thickness - metallic base paints.

(12) Filled honeycomb cells.

(13) Repairs made without removing moisture or moisture contamination from inside of radome wall.

(14) Abrupt changes in cross-sectional areas.

(15) Patches projecting above outside contour lines.

(16) Improper cure.

(17) Wrong size cells or density of honeycomb.

(18) Excessive overlap in honeycomb joints.

(19) Poor bonding of skin to core.

(20) Gaps in honeycomb core.

FAA Advisory Circular 43-14
Figure 1-6 (Sheet 3 of 3)

Starship 1
Avionics System

Rockwell International

operation

Collins General Aviation Division

Printed in USA

•523-0774078-001118
1st Edition, 14 January 1989

list of illustrations

Figure		Page
3-1	AAP-850 Altitude Awareness Panel	3-2
3-2	ALI-850A Altitude Indicator	3-4
3-3	APP-85D Autopilot Panel	3-6
3-4	ASI-850A Airspeed Indicator	3-8
3-5	CDU-850A Control Display Unit	3-10
3-6	CHP-850 Course/Heading Panel	3-38
3-7	ECD-870 Engine/Caution Display	3-40
3-8	MFD-870 Multifunction Display	3-52
3-9	MSP-850A Mode Select Panel	3-62
3-10	ND-870 Navigation Display	3-66
3-11	PFD-870 Primary Flight Display	3-84
3-12	RTU-870A Radio Tuning Unit	3-88
3-13	SDU-640A Sensor Display Unit	3-102
3-14	Reversionary Switching Panels	3-112
3-15	Cockpit Switches	3-114

List of Effective Pages

*The asterisk indicates pages changed, added, or deleted by the current change.

Page No	Issue
Title	14 Jan 89
List of Effective Pages	14 Jan 89
3-1 thru 3-115	14 Jan 89
3-116 Blank	14 Jan 89

Record of Revisions

RETAIN THIS RECORD IN THE FRONT OF MANUAL.
ON RECEIPT OF REVISIONS, INSERT REVISED PAGES IN THE MANUAL, AND ENTER DATE INSERTED AND INITIALS.

REV NO	REVISION DATE	INSERTION DATE/BY	SB NUMBER INCLUDED	REV NO	REVISION DATE	INSERTION DATE/BY	SB NUMBER INCLUDED
1st Ed	14 Jan 89		None				

section III
operation

3.1 INTRODUCTION

This section shows the operating controls and displays available in the Starship 1 Avionics System. The function of each control or display is described in sufficient detail to enable a flight-line technician to operate the equipment and troubleshoot the complete system. Note that this section is not intended to be a pilot's guide, but is written to provide a basic knowledge and understanding of operating procedures for this aircraft.

3.2 OPERATING CONTROLS AND DISPLAYS

Figures 3-1 through 3-13 show the operating controls and displays of each avionics LRU located in the cockpit. Figure 3-14 shows the aircraft reversionary switching panels. Figure 3-15 shows the cockpit switches directly related to the operation of the avionics system. Associated tables describe each control or display.

FIGURE	UNIT
3-1	AAP-850 Altitude Awareness Panel
3-2	ALI-850A Altitude Indicator
3-3	APP-85D Autopilot Panel
3-4	ASI-850A Airspeed Indicator
3-5	CDU-850A Control Display Unit
3-6	CHP-850 Course/Heading Panel
3-7	ECD-870 Engine/Caution Display
3-8	MFD-870 Multifunction Display
3-9	MSP-850A Mode Select Panel
3-10	ND-870 Navigation Display
3-11	PFD-870 Primary Flight Display
3-12	RTU-870A Radio Tuning Unit
3-13	SDU-640A Sensor Display Unit
3-14	Reversionary Switching Panels
3-15	Cockpit Switches

Caution

The Starship 1 Avionics System exhibits a high degree of functional integrity. Nevertheless, users must recognize that it is not practical to provide monitoring for all conceivable system failures and, however unlikely, it is possible that erroneous operation could occur without a fault indication. The operator has the responsibility to detect such an occurence by means of cross-checks with redundant or correlated information available in the cockpit.

Warning

Electronic control systems, such as autopilots, engine controls, fuel controls, temperature sensors, etc, used for aircraft control can be susceptible to transmissions from communications transceivers, DME's, transponders, etc, that can interfere with aircraft operations. If such a situation occurs, discontinue transmission or select a different frequency. If necessary, turn off the radio.

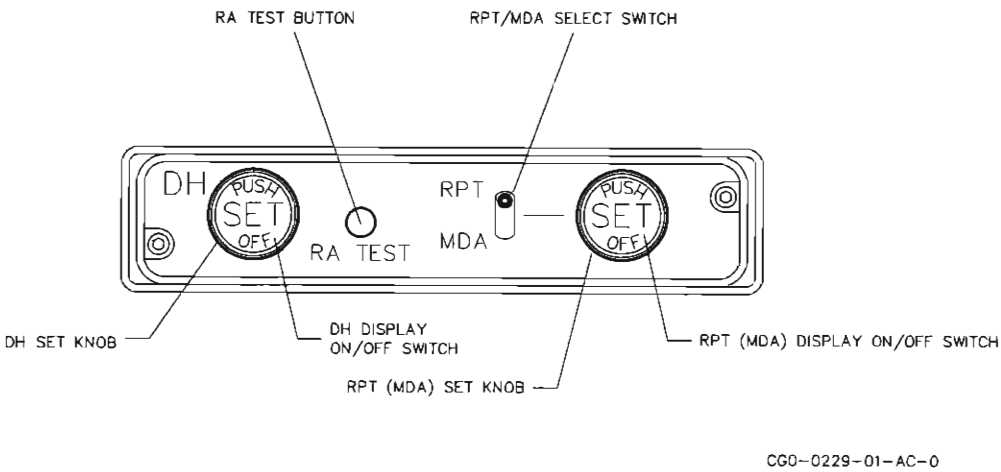

AAP-850 Altitude Awareness Panel, Controls
Figure 3-1

Table 3-1. AAP-850 Altitude Awareness Panel, Controls.

CONTROL	FUNCTION/DESCRIPTION
DH display on/off switch	Press this center switch to alternately select and deselect the decision height display on the PFD.
DH SET knob	Rotate the DH SET knob to select the decision height display on the PFD, and change the numeric decision height value. Clockwise rotation increases the decision height.
RA TEST button	Press and hold the RA TEST button to initiate the radio altimeter self-test function. The PFD should then indicate an altitude of 50 feet.
RPT/MDA select switch	The RPT/MDA toggle switch selects the function of the right SET switch and knob. Raise the RPT/MDA switch to select the reporting altitude (RPT) function. Lower the RPT/MDA switch to select the minimum decision altitude (MDA) function.
RPT (MDA) display on/off switch	Press this center switch to alternately select and deselect the reporting altitude (or minimum decision altitude) display on the PFD.
RPT (MDA) SET knob	Rotate the SET knob to select the RPT (or MDA) display on the PFD, and change the numeric altitude value (displayed in feet). Clockwise rotation increases the RPT (or MDA) altitude.

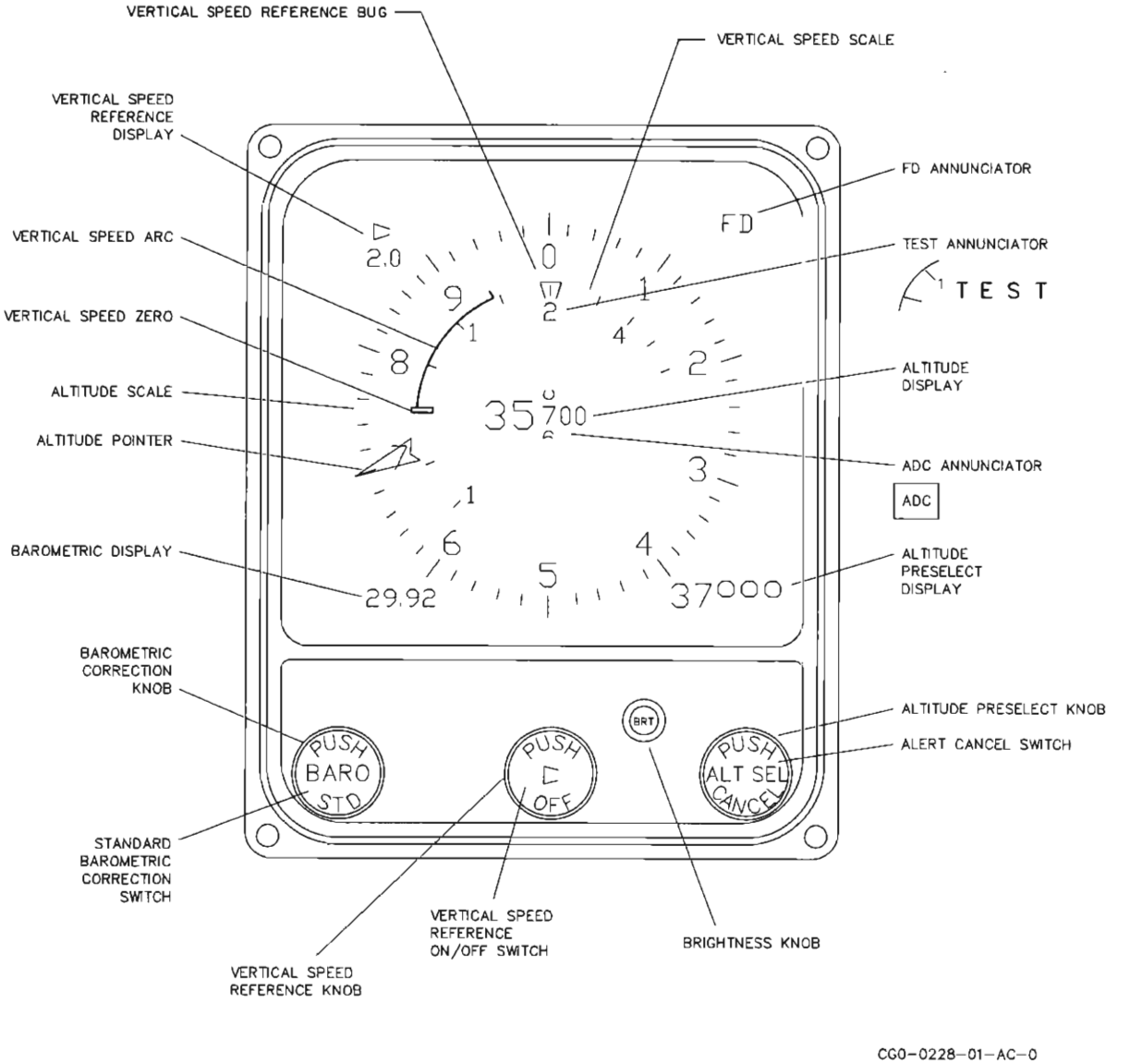

ALI-850A Altitude Indicator, Controls and Displays
Figure 3-2

Table 3-2. ALI-850A Altitude Indicator, Controls and Displays.

CONTROL OR DISPLAY	FUNCTION/DESCRIPTION
Altitude display	This green numeric display indicates baro corrected altitude. This display simulates a conventional mechanical altimeter. The units and tens digits are always displayed as zero; the pointer may be used to determine these values.
Altitude scale	This white outer scale functions with the altitude pointer to indicate baro corrected altitude. Scale markings are at 20-foot increments.
Altitude pointer	This green pointer rotates around the altitude scale to indicate a portion of the baro corrected altitude. Each revolution of the pointer equals 1000-feet of altitude.

Table 3-2. ALI-850A Altitude Indicator, Controls and Displays (Cont).

CONTROL OR DISPLAY	FUNCTION/DESCRIPTION
Barometric display	This cyan numeric display indicates the barometric pressure correction in either inches of mercury or in millibars (selected by an external switch). This display flashes during an FL180 alert (18 000 feet).
Barometric correction knob	Rotate the BARO knob to adjust the amount of barometric pressure correction. Clockwise rotation increases the baro pressure setting.
Standard barometric correction switch	Press the center PUSH STD switch to select standard barometric pressure correction (29.92 inches of mercury or 1013 millibars).
Altitude preselect display	This cyan numeric display indicates the preselected altitude. This display flashes when approaching the preselect altitude (±1000 feet), and then becomes steady again at capture (±200 feet). This display becomes yellow and flashes if the aircraft deviates ±200 feet (and again at ±1000 feet) from the captured altitude. This display momentarily becomes magenta if the left and right side preselect values do not agree, and a preselect altitude is changed.
Altitude preselect knob	Rotate the ALT SEL knob to change the preselected altitude. Range is from 0 to 55 000 feet. Clockwise rotation increases the preselect altitude.
Alert cancel switch	Press the center PUSH CANCEL switch to cancel altitude alerts (flashing displays). If no alerts exist, this switch momentarily tests the preselect aural warning system.
Vertical speed scale	This white inner scale functions with the VS arc to indicate vertical speed. Scale markings are nonlinear to improve readability at lower speeds. An extended scale is displayed when either VS or the VS bug position exceeds 600 fpm, and is removed when VS and VS bug position are both less than 300 fpm. Extended full scale range is 6000 feet per minute.
Vertical speed zero	This white line indicates the zero vertical speed mark. Vertical speed indications originate from this line.
Vertical speed arc	This green arc travels along the VS scale to indicate aircraft vertical speed. The arc moves clockwise from the VS zero line into the upper portion of the scale for climbs. The arc moves counterclockwise from the VS zero line into the lower portion of the scale for descents.
Vertical speed reference bug	This cyan bug may be selected for display as a VS reference marker.
Vertical speed reference display	This cyan numeric display indicates the position of the VS bug. This display shows the numeric equivalent of the VS reference marker setting.
Vertical speed reference knob	Rotate this knob to bring the VS bug and reference display into view, and change the reference.
Vertical speed reference on/ off switch	Press the center PUSH OFF switch to alternately select and deselect the VS bug and VS reference displays. These displays are not removable when the reference is controlled by the FCS system.
TEST annunciator	The yellow TEST annunciation is displayed while the ADC computer is in test mode.
FD annunciator	The cyan FD annunciation is displayed when the VS reference is controlled by the FCS system. This annunciation flashes initially and then becomes steady.
ADC annunciator	The red ADC annunciation is displayed if the ADC computer fails. This annunciation flashes for 10 seconds, and then becomes steady.
Brightness knob	Rotate the BRT knob to trim the brightness of the display. Clockwise rotation increases brightness.

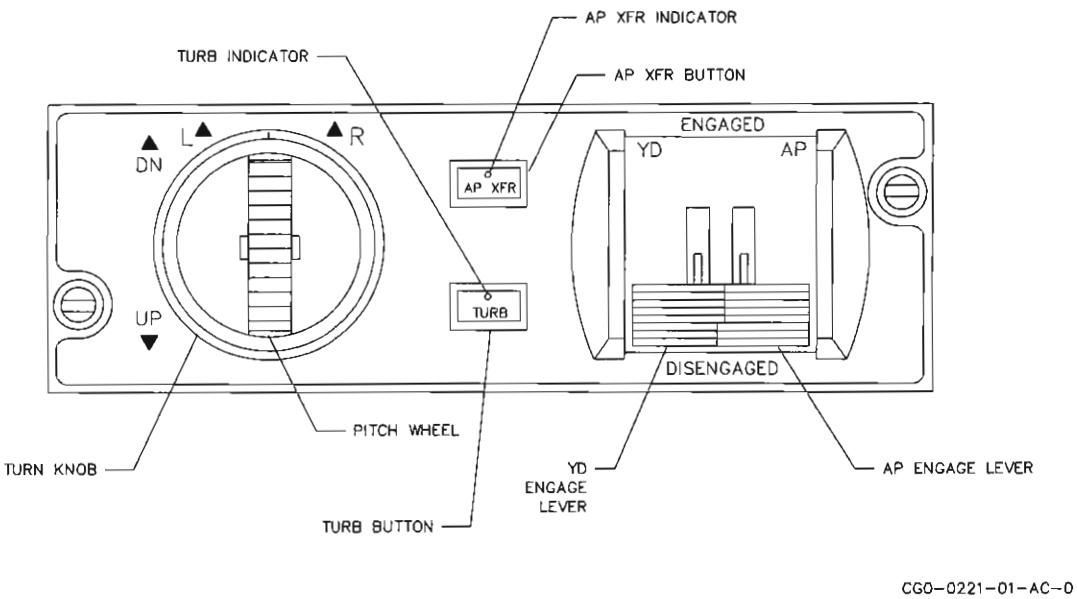

APP-85D Autopilot Panel, Controls and Displays
Figure 3-3

Table 3-3. APP-85D Autopilot Panel, Controls and Displays.

CONTROL OR DISPLAY	FUNCTION/DESCRIPTION
YD engage lever	Raise the YD lever to engage the yaw damper. The lever will remain engaged if no faults are detected. When engaged, the FCC computers provide yaw damping and turn coordination. The PFD does not display any YD engage message. Press the autopilot disconnect button or manually lower the YD lever to disengage the yaw damper. The yaw damper automatically disengages if the FCC yaw damper monitors detect a failure condition. The PFD displays a flashing yellow YD annunciation after a yaw damper disengage; the annunciation becomes steady after 10 seconds. Press the autopilot disengage button to cancel the YD disengage annunciation.
AP engage lever	Raise the AP engage lever to engage the autopilot; a mechanical interlock also engages the yaw damper. The levers will remain raised if no faults are detected. When engaged, the autopilot flies flight director commands from the coupled side. The PFD displays a green AP ← (coupled to left side) or AP → (coupled to right side) annunciation when engaged. Press the autopilot disconnect button, the go-around button, the trim switch, or manually lower the AP lever to disengage the autopilot. The autopilot automatically disengages if the FCC autopilot monitors detect a failure condition. The PFD displays a flashing yellow AP ← (coupled to left side) or AP → (coupled to right side) annunciation after an autopilot disengage. Press the autopilot disengage button to cancel flashing and aural disengage warnings.
Pitch wheel	Rotate the pitch wheel to apply a pitch take-command to the autopilot. Push the wheel forward to command pitch down, or backward to command pitch up. The amount of command is proportional to the amount of pitch wheel displacement from the center detent position. The wheel is spring loaded to return to center detent. The pitch wheel is functional only when the autopilot is engaged. When the pitch wheel is rotated, any active vertical autopilot mode clears (except GS capture) and pitch hold results. In pitch hold mode, the PFD displays a green PTCH annunciation.
Turn knob	Rotate the turn knob to apply a roll take-command to the autopilot. Rotate the knob clockwise to command roll right, or counterclockwise to command roll left. The amount of command is proportional to the amount of turn knob displacement from the center detent position. The knob is not spring loaded, and retains its position when released. The turn knob is functional only when the autopilot is engaged. When the turn knob is rotated, any active lateral autopilot mode clears (except approach or LOC capture) and roll hold mode results. (Heading hold mode results if the existing bank angle is less than 5 degrees.) The PFD displays a green ROLL annunciation.
AP XFR button	Push the AP XFR button to alternately select and deselect autopilot transfer mode. Normally the autopilot flies flight guidance commands from the left side FCC. When AP XFR mode is selected, the autopilot flies flight guidance commands from the right side FCC. If transfer mode is selected prior to engagement, AP → annunciates in white on the PFD.
AP XFR indicator	This indicator is located in the AP XFR button, and lights when autopilot transfer is selected (right side control).
TURB button	Push the TURB button to alternately select and deselect turbulence mode. When TURB mode is selected, autopilot gains are reduced to provide a smoother flight in turbulent conditions.
TURB indicator	This indicator is located in the TURB button, and lights when TURB mode is selected.

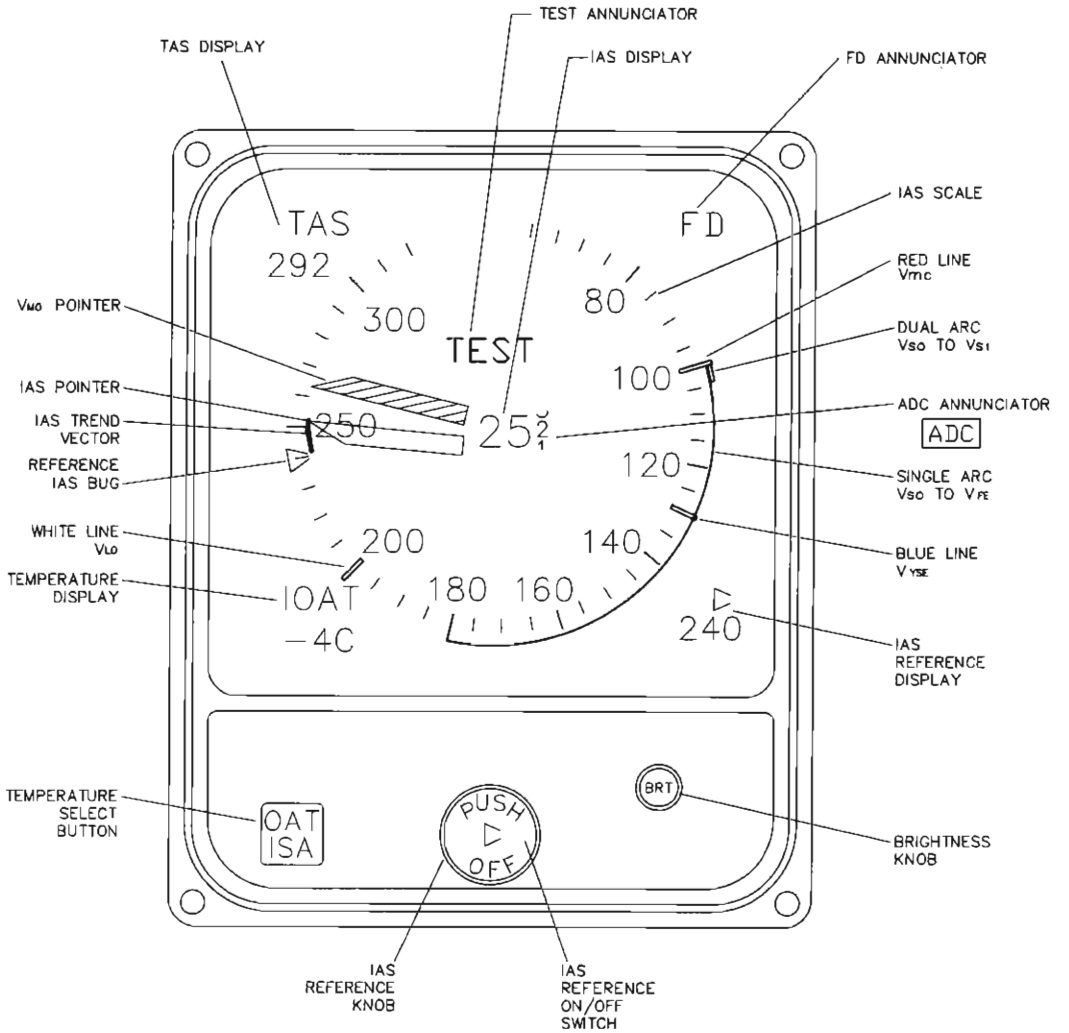

CGO-0233-01-AC-0

ASI-850A Airspeed Indicator, Controls and Displays
Figure 3-4

Table 3-4. ASI-850A Airspeed Indicator, Controls and Displays.

CONTROL OR DISPLAY	FUNCTION/DESCRIPTION
IAS display	This green numeric display shows current IAS (indicated air speed). The unit digit of this display simulates a rotating mechanical wheel. If the aircraft airspeed exceeds the V_{MO}, the IAS display becomes red and flashes as long as the overspeed condition exists.
IAS scale	This white scale functions with the IAS pointer to indicate current IAS. The scale markings are expanded above 200 knots for improved readability.
IAS pointer	This green pointer rotates around the IAS scale to indicate current IAS. Range is from 30 to 320 knots. This indication is numerically repeated in the IAS display.

Table 3-4. ASI-850A Airspeed Indicator, Controls and Displays (Cont).

CONTROL OR DISPLAY	FUNCTION/DESCRIPTION
IAS trend vector	This magenta arc travels along the IAS scale to indicate the IAS trend. When airspeed is changing, the arc originates from the end of the IAS pointer, and extends to predict future IAS. The tip of the arc indicates what airspeed will be in 10 seconds, if present acceleration or deceleration is maintained. The trend vector is not displayed when the aircraft is on the ground.
V_{MO} pointer	This red striped pointer rotates around the IAS scale to display the maximum operating airspeed for existing flight conditions.
V_{LO} white line	This stationary white line indicates the maximum landing gear extension speed (200 knots).
V_{YSE} cyan line	This cyan line indicates the optimum single engine rate-of-climb speed at the current flight altitude.
V_{MC} red line	This stationary red line indicates the air minimum control speed of 101 knots.
Single arc	This stationary single white arc indicates the full-flap operating range of 101 to 180 knots. The lower limit (V_{SO}) is the aircraft stalling speed at maximum weight with flaps extended and idle power. The upper limit (V_{FE}) is the maximum speed permissible with flaps extended.
Dual arc	This stationary dual white arc indicates the stall speed range of 101 to 103 knots. The lower limit (V_{SO}) is the aircraft stalling speed at maximum weight with flaps extended and idle power. The upper limit (V_{Si}) is the stalling speed at maximum weight with flaps retracted and idle power.
TAS display	This green numeric display indicates current TAS (true air speed).
Temperature display	This green temperature display indicates IOAT (indicated outside air temperature), OAT (corrected outside air temperature), or ISA (international standard atmosphere temperature). Normally IOAT is displayed.
Temperature select button	Press this OAT ISA button once to select OAT temperature display. Press this button a second time to select ISA temperature display. The temperature display will show the OAT or ISA temperature for 5 seconds, then revert back to the IOAT display.
IAS reference bug	This cyan bug may be selected for display as an IAS reference marker.
IAS reference display	This cyan numeric display indicates the position of the IAS bug. This display shows the numeric equivalent of the IAS reference marker setting.
IAS reference knob	Rotate this knob to bring the IAS bug and reference display into view, and change the reference. Clockwise rotation increases the IAS reference.
IAS reference on/off switch	Press the center PUSH OFF switch to alternately select and deselect the IAS bug and IAS reference displays. These displays are not removable when the reference is controlled by the FCS system.
TEST annunciator	The yellow TEST annunciation is displayed while the ADC computer is in test mode.
FD annunciator	The cyan FD annunciation is displayed when the IAS reference is controlled by the FCS system. This annunciation flashes initially and then becomes steady.
ADC annunciator	The red ADC annunciation is displayed if the ADC computer fails. This annunciation flashes for 10 seconds, and then becomes steady.
Brightness knob	Rotate the BRT knob to trim the brightness of the display. Clockwise rotation increases brightness.

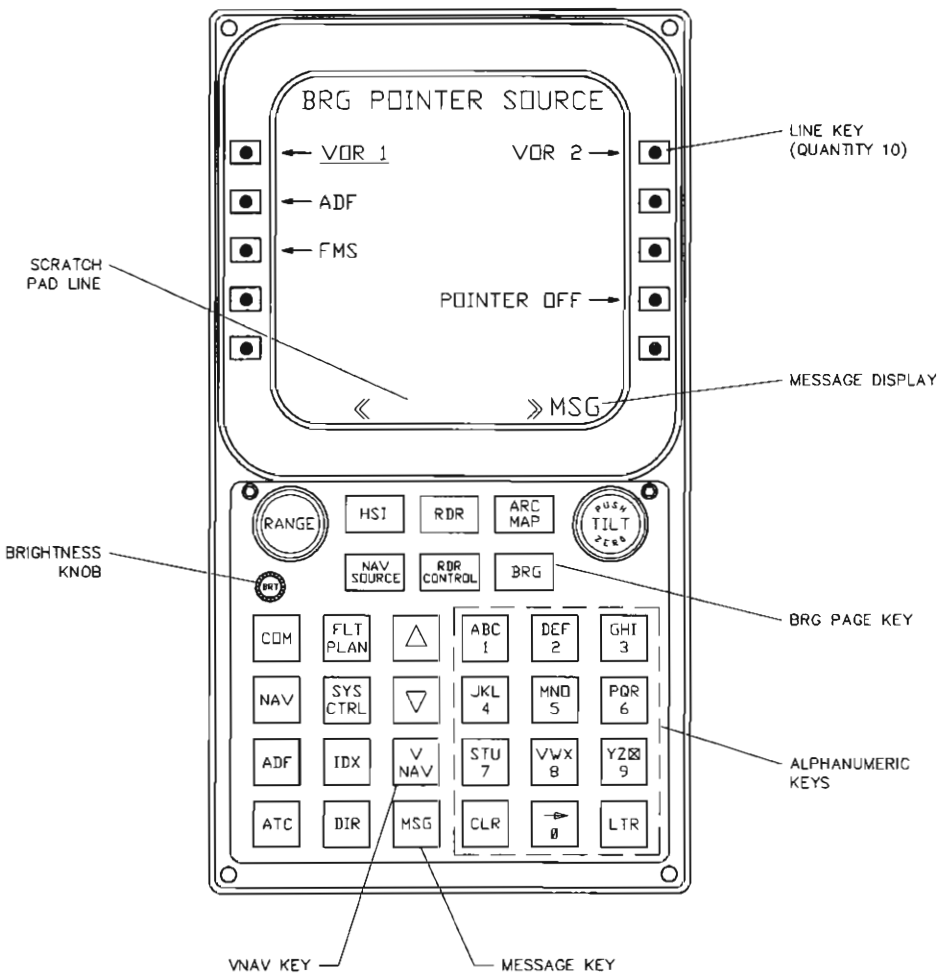

NOTE: THIS PAGE IS DISPLAYED WHEN A SINGLE ADF RECEIVER IS INSTALLED. WHEN 2 ADF RECEIVERS ARE INSTALLED, "ADF 1" AND "ADF 2" LINE KEY LABELS ARE DISPLAYED.

CGO-0234-11-AC-0

CDU-850A Control Display Unit, Controls and Displays
Figure 3-5 (Sheet 1 of 11)

Table 3-5. CDU-850A Control Display Unit, Controls and Displays.

CONTROL OR DISPLAY	FUNCTION/DESCRIPTION
Line keys	Press 1 of the 10 line keys to select the function displayed on that line. The line functions (and use of the line keys) depend on which page is selected for display.
Scratch pad line	This line displays data entered by the alphanumeric keys. Outward pointing chevrons identify this line. Scratch pad data is normally entered by the operator and then transferred to a selected data field.
Alphanumeric keys	Press these keys to enter data on the scratch pad line of the display. To enter a number, press the alphanumeric key. To enter a letter, press the alphanumeric key; then press the LTR key 1, 2, or 3 times. (To enter K, press 4-LTR-LTR.) The CLR key functions like a destructive backspace.
Message display	The MSG display annunciates the presence of a system message. The MSG annunciation flashes yellow when a new message is received, and becomes steady white when the message key is pressed and all messages have been reviewed.
Message key	Press the MSG key once to display the message page. Press the MSG key again to return to the previous display page; the MSG annunciation stops flashing until a new message is received.
VNAV key	The VNAV key is not operational at this time, but is reserved for future use.
Brightness knob	Rotate the BRT knob to change the brightness of the display. Clockwise rotation increases brightness.
BRG page key	Press this key to select the BRG POINTER SOURCE display page. This display shows the bearing pointer sources which may be selected for display on the ND. The active pointer source is displayed in green and underlined, other sources are white. Press the adjacent line key to select a pointer source. When a single ADF receiver is installed, possible sources are VOR 1, VOR 2, ADF, or FMS. When dual ADF receivers are installed, possible sources are VOR 1, VOR 2, ADF 1, ADF 2, or FMS. The POINTER OFF selection removes the bearing pointer display from the ND (lower-left of crt).

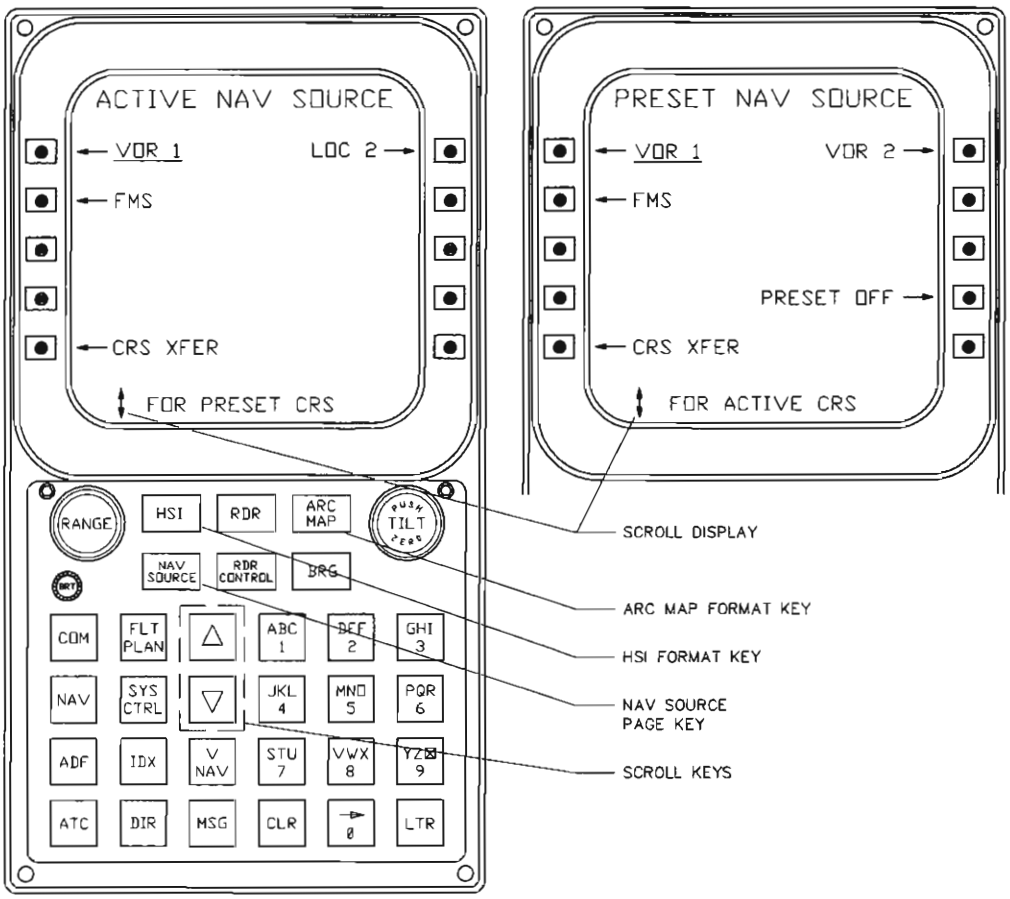

CDU-850A Control Display Unit, Controls and Displays
Figure 3-5 (Sheet 2 of 11)

Table 3-5. CDU-850A Control Display Unit, Controls and Displays (Cont).

CONTROL OR DISPLAY	FUNCTION/DESCRIPTION
HSI format key	Press this key to select the full-compass rose HSI display on the ND. The HSI format simulates a conventional horizontal situation indicator. Weather radar is not displayed in this format.
ARC MAP format key	Press this key to alternately select the ARC and MAP displays on the ND. The ARC format is an expanded 70-degree compass segment display. The MAP format superimposes a navigation map onto the ARC display; distance (10-300 NM) is selected by the RANGE knob.
Scroll display	This arrow display indicates that additional parameters, values, or pages are available for display and may be accessed using the scroll keys. The arrow may point up, down, or up-and-down.
Scroll keys	Press the up or down key to scroll the display up/down one line, change a value, or select a related display. These keys are functional only when the scroll arrows are displayed. Refer to the next paragraph for scroll key functions pertaining to the NAV SOURCE pages.
NAV SOURCE page key	Press this key to alternately select the ACTIVE NAV SOURCE and the PRESET NAV SOURCE display pages. Either scroll key may also be used to alternate between pages.
ACTIVE NAV SOURCE display	This display shows the NAV sources which may be selected to supply the active course information. The selected active NAV source is displayed in green and underlined, other sources are white. Press the adjacent line key to select a NAV source. Possible sources are VOR 1 (LOC 1 if ILS tuned), VOR 2 (or LOC 2), FMS, or the preset NAV source. The active NAV source is displayed on the upper-left of the ND. The CRS XFER (course transfer) line key activates the preset NAV source which has been selected (green and underlined) on the PRESET NAV SOURCE page. This source now supplies the active course information. PRESET OFF is then automatically selected on the PRESET NAV SOURCE page.
PRESET NAV SOURCE display	This display shows the NAV sources which may be selected as the preset NAV source. This source becomes the active NAV source when the CRS XFER line key is pressed. The selected preset NAV source is displayed in green and underlined, other sources are white. Press the adjacent line key to select the NAV source. Possible sources are VOR 1 (LOC 1 if ILS tuned), VOR 2 (or LOC 2), or FMS. The preset NAV source is displayed on the upper-right of the ND. The PRESET OFF selection deselects all preset NAV sources (all become white). The preset course display is removed from the ND. The CRS XFER (course transfer) line key activates the selected preset NAV source (displayed in green and underlined). This source now supplies the active course information. PRESET OFF then automatically selects, and the CRS XFER line key label changes to RECALL CRS. Select RECALL CRS to recall the previously active NAV source as the new preset NAV source.

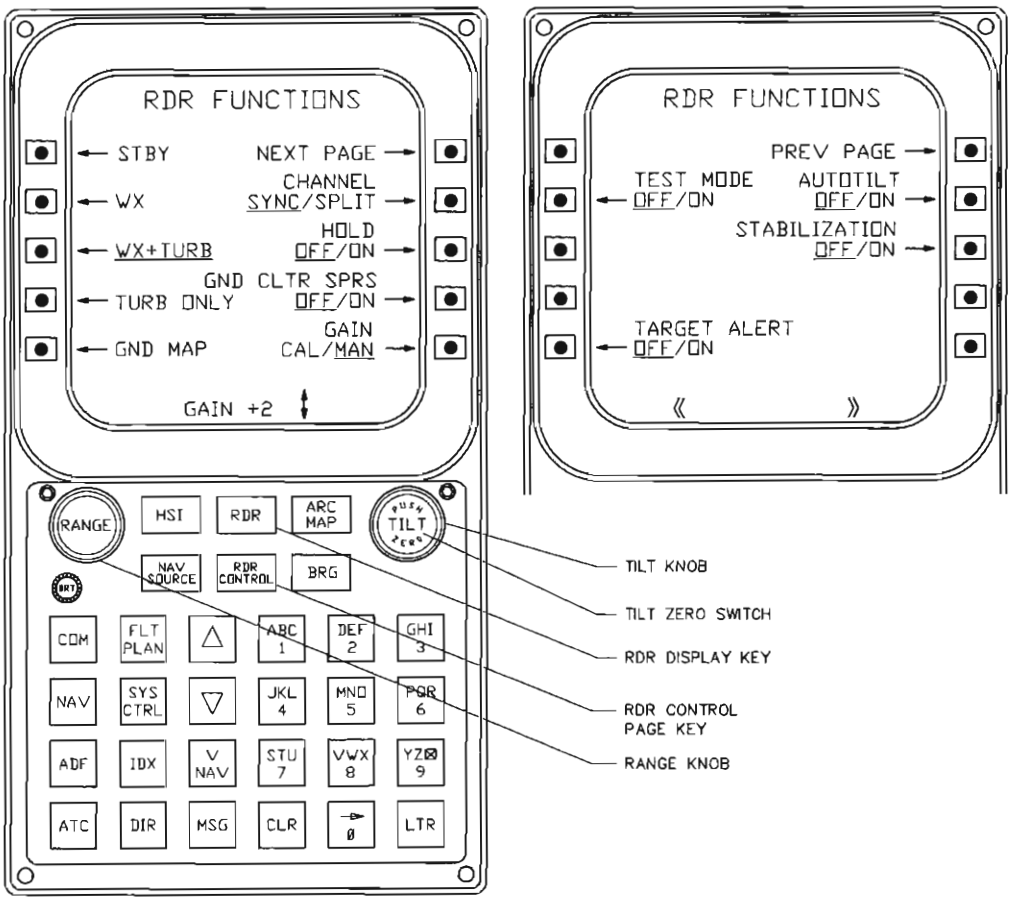

CGO-0234-11-AC-0

CDU-850A Control Display Unit, Controls and Displays
Figure 3-5 (Sheet 3 of 11)

Table 3-5. CDU-850A Control Display Unit, Controls and Displays (Cont).

CONTROL OR DISPLAY	FUNCTION/DESCRIPTION
RDR display key	Press this key to alternately select or deselect the display of weather radar on the ND. If the ND is in HSI format, ARC format automatically selects.
TILT knob	Rotate the TILT knob to select the RTA (antenna) vertical tilt angle (-14 to +14 degrees). The selected angle is annunciated with the letter T on the lower-left of the ND (upper-right of MFD). The TILT knob is not operational in STBY mode.
TILT zero switch	Press the center PUSH ZERO switch to set the RTA tilt angle to 0 degrees.
RANGE knob	Rotate the RANGE knob to select the radar display range (10 to 300 NM). The appropriate range annunciations are displayed on the ND and on the MFD.
RDR CONTROL page key	Press this key to display 1 of the 2 RDR FUNCTIONS pages. These pages contain all of the turbulence weather radar control functions. Press this key again to display the other RDR FUNCTIONS page.
RDR FUNCTIONS display (page 1)	This display page shows the selectable RTA modes and some of the available radar control functions. Mode selections are displayed on the left side of the page. The active mode is displayed in green (or yellow) and underlined, other modes are white. Press the adjacent line key to select the active mode. The selected mode is also annunciated on the lower-left of the ND (upper-left of MFD).
STBY	Standby mode inhibits the RTA transmitter and parks the antenna at the boresight (0°) position.
WX	Weather mode enables the RTA to detect weather targets.
WX + TURB	Weather + turbulence mode enables the RTA to detect both weather and turbulence (within the 50 NM range) targets.
TURB ONLY	Turbulence mode enables the RTA to detect turbulence targets within the 50 NM range. This mode reverts to WX + TURB after 30 seconds.
GND MAP	Ground map mode tilts the RTA (antenna) downward to detect prominent terrain features. Active radar control functions are displayed in green (or yellow) and underlined, other functions are white. Press the adjacent line key to select the active function. The selected function is also annunciated on the lower-left of the ND (upper-left of MFD).
CHANNEL	CHANNEL SYNC causes the on-side CDU and ND (also the MFD) radar display functions to sync to the off-side CDU. A change on either CDU then changes both of the radar pages, both ND displays, and the MFD radar display. CHANNEL SPLIT causes left and right CDU radar control functions to operate independently. The MFD radar display can be switched to either channel (RDR 1/2 display on lower-left of MFD).
HOLD	HOLD ON freezes the radar image on the display. The held radar display is not updated. HOLD is annunciated on the lower-left of the ND (upper-left of MFD).
GND CLTR SPRS	GND CLTR SPRS ON reduces the intensity of ground returns (clutter) in WX and WX + TURB modes to help identify precipitation targets. GCS is annunciated in the lower-left of the ND (upper-left of MFD).

Table 3-5. CDU-850A Control Display Unit, Controls and Displays (Cont).

CONTROL OR DISPLAY	FUNCTION/DESCRIPTION
GAIN	GAIN CAL causes the RTA receiver gain to automatically calibrate to a preset value. The scratch pad line is blank. GAIN MAN allows the operator to manually select the amount of receiver gain. The gain value is displayed on the scratch pad line, and changed (-3 to +3) using the scroll keys. The gain value is also annunciated with the letter G on the lower-left of the ND (upper-left of MFD).
NEXT PAGE	Press this line key to select page 2 of the RDR FUNCTIONS display.
RDR FUNCTIONS display (page 2)	This display page shows the rest of the available radar control functions.
TEST MODE	TEST ON initiates the RTA functional self-test. TEST is annunciated on the lower-left of the ND (upper-left of MFD). During test, 7 colored arcs are displayed across the full sector of the crt.
TARGET ALERT	TARGET ALERT ON enables an annunciator which alerts the operator if the aircraft is approaching a weather or turbulence target. This function is active only when on-side weather is not selected for display on the ND/MFD. TGT is displayed in yellow on the upper-center of the ND/MFD when a target alert is detected; this annunciation flashes for 10 seconds and then becomes steady.
AUTOTILT	AUTOTILT ON enables the RTA to automatically adjust the antenna tilt angle to maintain display continuity when the aircraft changes altitude or when mode/range is changed. Note that the TILT knob is active if AUTOTILT is ON or OFF.
STABILIZATION	STABILIZATION ON automatically stabilizes the radar display with attitude data from the AHS system. If an AHRS failure occurs, select STABILIZATION OFF; USTB is annunciated on the lower-left of the ND (upper-right of MFD).
PREV PAGE	Press this line key to return to page 1 of the RDR FUNCTIONS display.

This page intentionally left blank.

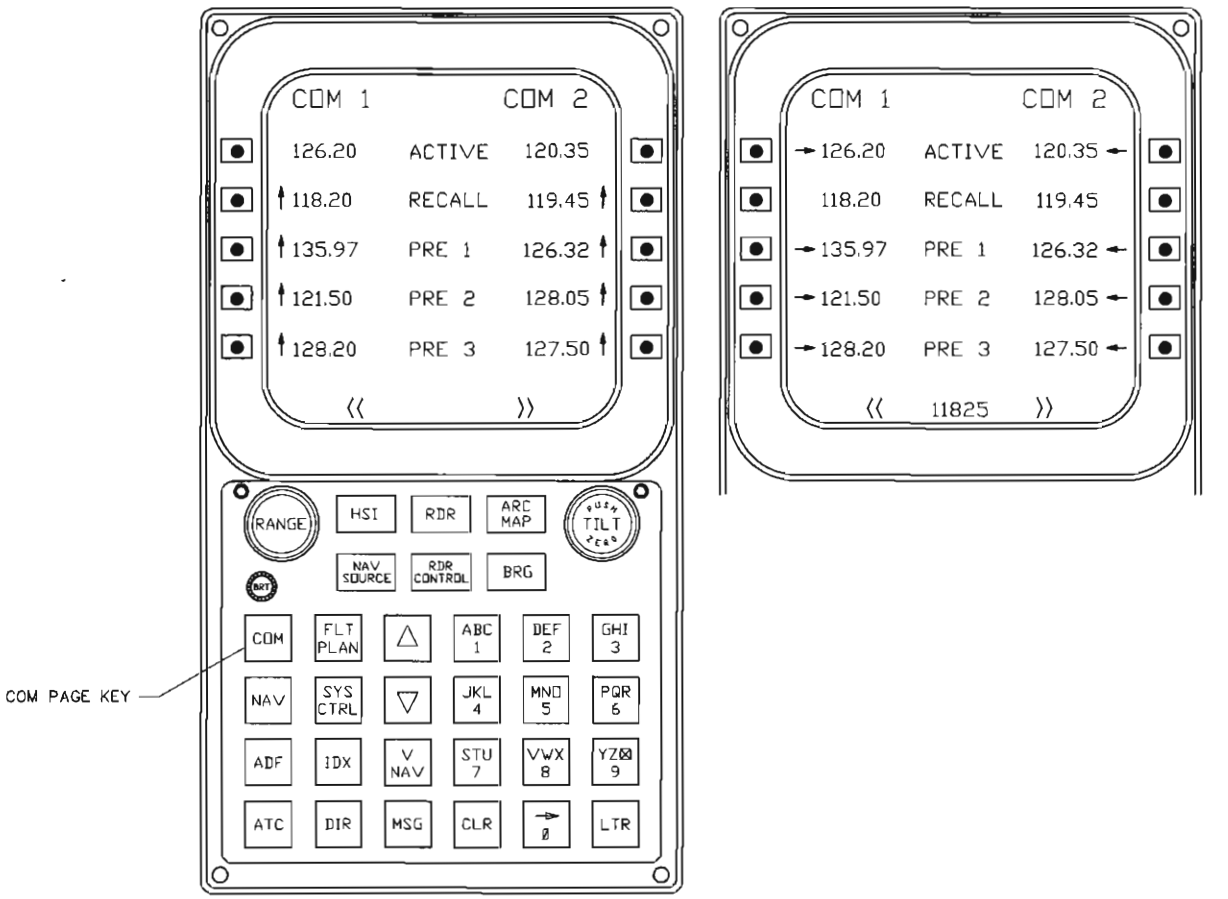

CGO-0234-11-AC-0

CDU-850A Control Display Unit, Controls and Displays
Figure 3-5 (Sheet 4 of 11)

Table 3-5. CDU-850A Control Display Unit, Controls and Displays (Cont).

CONTROL OR DISPLAY	FUNCTION/DESCRIPTION
COM page key	Press this key to display the (VHF) COM tuning page.
COM tuning page	This display shows the left and right side VHF-422A active frequencies, as well as available recall and preset frequencies. This page provides two secondary methods of tuning the COM radios. The RTU is the primary radio controller.
Method 1	The active frequency load method is available when the scratch pad line is blank. In this mode, eight white upward pointing arrows are displayed beside the recall and preset line keys. Press the line key next to the displayed RECALL, PRE 1, PRE 2, or PRE 3 frequency to tune the COM 1 or COM 2 radio to that frequency. The frequency on the selected line is copied to the ACTIVE line, the old active frequency is transferred to the RECALL line, and the old recall frequency is discarded. Note that the ACTIVE frequency display line updates automatically if a radio is retuned by the RTU; the old ACTIVE frequency transfers to the RECALL line if it had been active for at least 5 seconds. Frequencies on the ACTIVE line are normally displayed in green. The active frequency is replaced by red dashes if that radio is inoperative. TEST is displayed in green (instead of the active frequency) if a radio is performing self-test.
Method 2	The enter data/transfer method is selected when an alphanumeric key is pressed (data is entered onto the scratch pad line). In this mode, eight yellow inward pointing arrows are displayed beside the active and preset line keys. Enter a new COM frequency on the scratch pad line using the alphanumeric keys, and then press a left or right ACTIVE, PRE 1, PRE 2, or PRE 3 line key. The new frequency (if valid) is transferred to the selected line on both CDU's. If transfer is to the ACTIVE line, the radio retunes, the old active frequency is transferred to the RECALL line, and the old recall frequency is discarded. Note that decimal points are not entered. For example, enter 11825 to select 118.25 MHz. Enter 1267 to select 126.70 MHz.

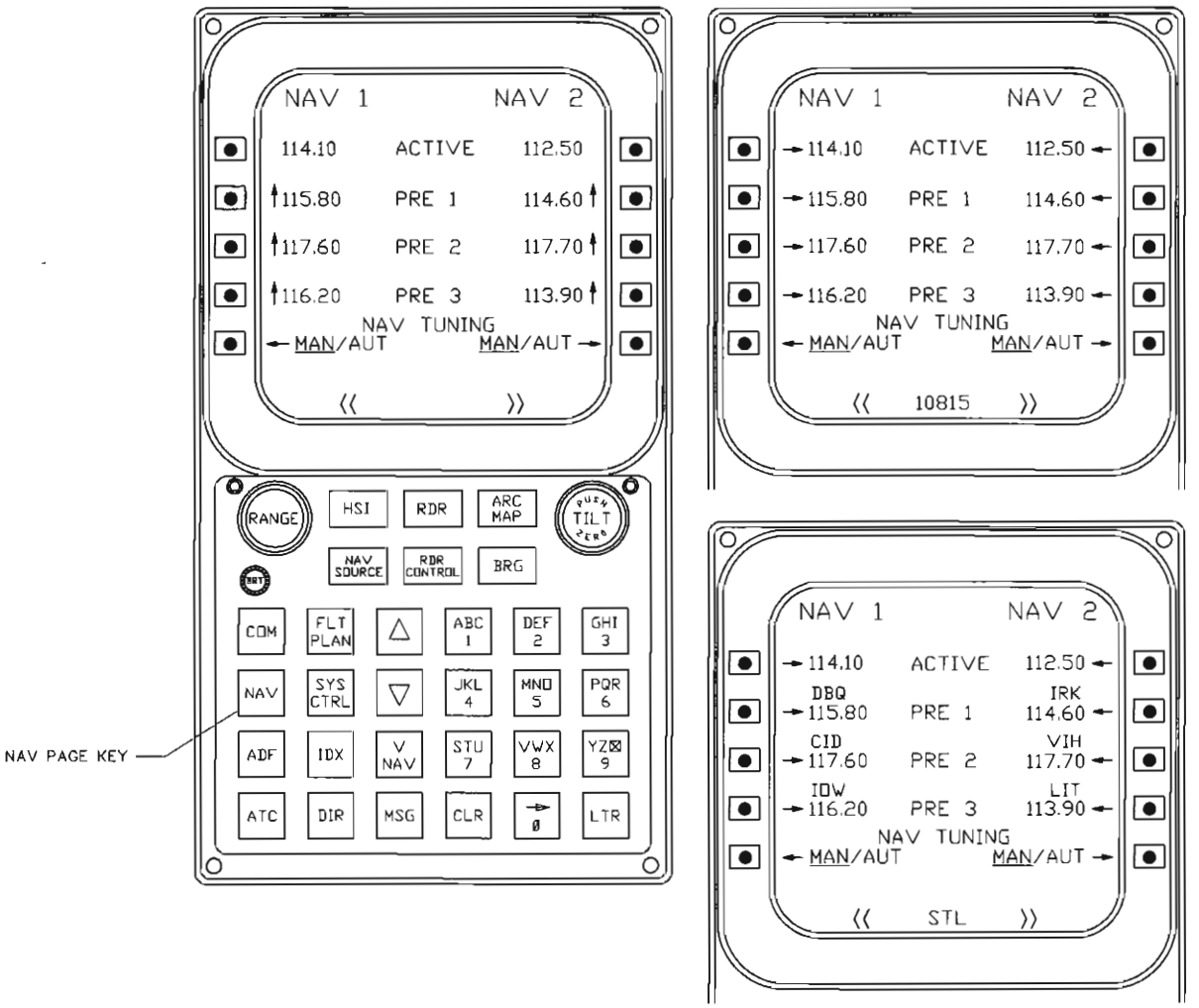

CGO-0234-11-AC-0

CDU-850A Control Display Unit, Controls and Displays
Figure 3-5 (Sheet 5 of 11)

Table 3-5. CDU-850A Control Display Unit, Controls and Displays (Cont).

CONTROL OR DISPLAY	FUNCTION/DESCRIPTION
NAV page key	Press this key to display the (VHF) NAV tuning page.
NAV tuning page	This display shows the left and right side VIR-432 active frequencies, as well as available preset frequencies and FMS autotune selection. This page provides three secondary methods of manually tuning the NAV radios. The RTU is the primary radio controller.
Method 1	The active frequency load method is available when the scratch pad line is blank. In this mode, six white upward pointing arrows are displayed beside the preset line keys.
	Press the line key next to the displayed PRE 1, PRE 2, or PRE 3 frequency to tune the NAV 1 or NAV 2 radio to that frequency. The frequency on the selected line is copied to the ACTIVE line; the old active frequency is discarded.
	Note that the ACTIVE frequency display line updates automatically if either radio is retuned by an RTU.
	Frequencies on the ACTIVE line are normally displayed in green. The active frequency is replaced by red dashes if that radio is inoperative. TEST is displayed in green (instead of the active frequency) if a radio is performing self-test.
Method 2	The enter data/transfer method is available when an alphanumeric key is pressed (data is entered onto the scratch pad line). In this mode, eight yellow inward pointing arrows are displayed beside the active line keys.
	Enter a new NAV frequency on the scratch pad line using the alphanumeric keys, and then press a left or right ACTIVE, PRE 1, PRE 2, or PRE 3 line key. The new frequency (if valid) is transferred to the selected line on both CDU's. If transfer is to the ACTIVE line, the radio retunes and the old active frequency is discarded.
	Note that decimal points are not entered. For example, enter 10815 to select 108.15 MHz. Enter 1174 to select 117.40 MHz.
Method 3	The station ident search method is available when an alphanumeric key is pressed (data is entered onto the scratch pad line). In this mode, eight yellow inward pointing arrows are displayed beside the active line keys.
	Enter the 3-letter navaid station ident code on the scratch pad line using the alphanumeric keys. Press a left or right ACTIVE, PRE 1, PRE 2, or PRE 3 line key. The CDU then searches the FMS data base for all stations with the entered ident.
	After a successful search is completed, the navaid station frequency is displayed on the selected destination line of both CDU's. If the selected line is the ACTIVE line, the radio retunes and the old active frequency is discarded. If the selected line is a preset, the station ident is displayed above the station frequency.
	If a station with the entered ident is not found in the data base, an error message is displayed and the operation is aborted. If more than one station is found, prompts are displayed to alert the operator; the operator then selects a station from the list of duplicates using the scroll keys.
FMS autotune	The NAV radios may be independently tuned, either manually by the CDU/RTU's or automatically by the FMS computer. Line keys select MAN or AUT tuning. The selected tuning method is displayed in green and underlined.
	NAV TUNING MAN selects manual tuning. The VIR-432 retunes only in response to operator action on the CDU or RTU.
	NAV TUNING AUT selects automatic tuning. The VIR-432 automatically retunes in response to FMC-851A computer commands. This allows the FMS to select en route stations, and maintain valid position information throughout the flight. AUT cancels if the operator manually retunes the radio using the CDU or RTU.
	Note that while the radio is being tuned by the FMS, AUT replaces the VOR or ILS line display on the RTU.

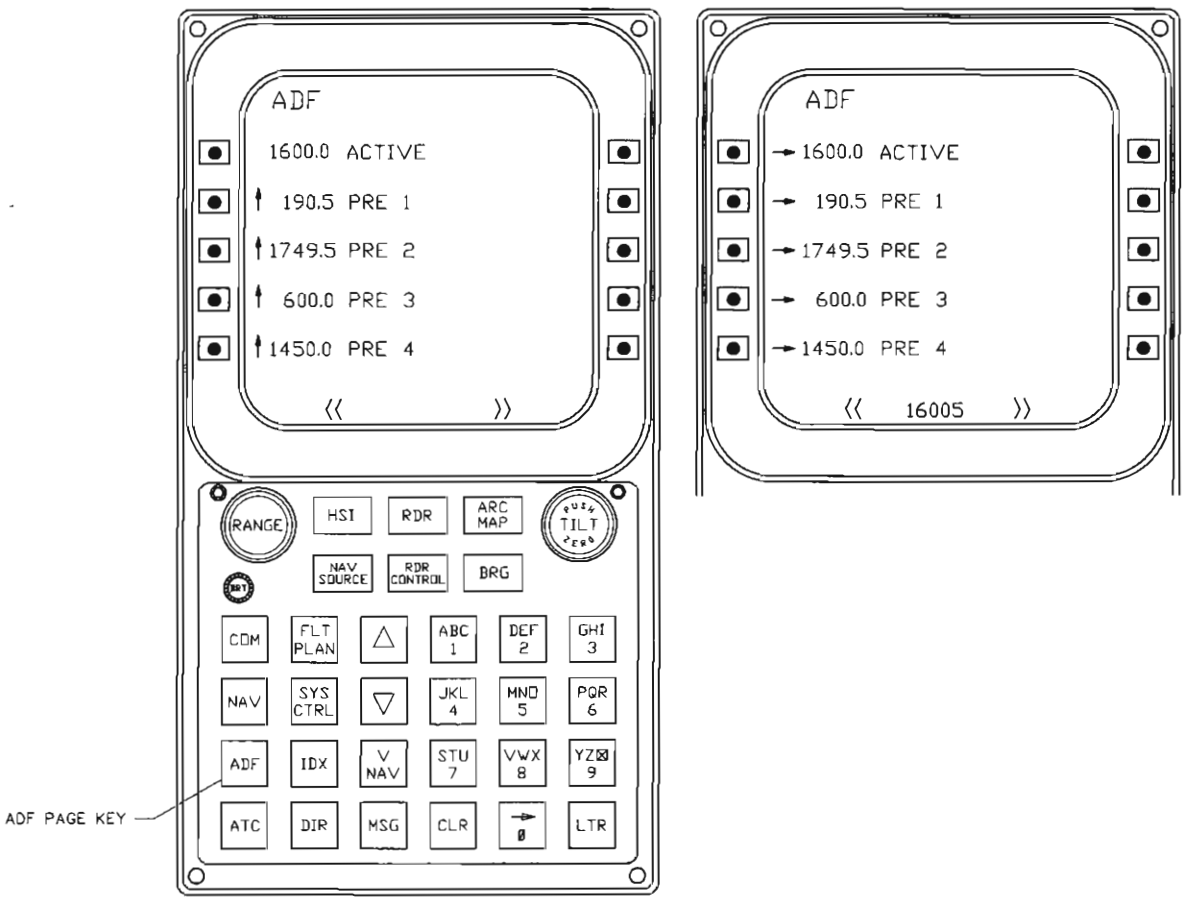

NOTE: THESE PAGES ARE DISPLAYED WHEN A SINGLE ADF RECEIVER IS INSTALLED. WHEN 2 ADF RECEIVERS ARE INSTALLED, "ADF 1" AND "ADF 2" FREQUENCY COLUMNS ARE DISPLAYED.

CGO-0234-11-AC-0

CDU-850A Control Display Unit, Controls and Displays
Figure 3-5 (Sheet 6 of 11)

Table 3-5. CDU-850A Control Display Unit, Controls and Displays (Cont).

CONTROL OR DISPLAY	FUNCTION/DESCRIPTION
ADF page key	Press this key to display the ADF tuning page.
ADF tuning page	This display shows the ADF-462 active frequency, as well as the available preset frequencies. This page provides two secondary methods of tuning the ADF radio. The RTU is the primary radio controller.
Method 1	The active frequency load method is available when the scratch pad line is blank. In this mode, four white upward pointing arrows are displayed beside the preset line keys. Press the line key next to the displayed PRE 1, PRE 2, PRE 3, or PRE 4 frequency to tune the ADF radio to that frequency. The frequency on the selected line is copied to the ACTIVE line; the old active frequency is discarded. Note that the ACTIVE frequency display line updates automatically if the radio is retuned by an RTU. The active frequency is normally displayed in green, but is replaced by red dashes if the radio is inoperative. TEST is displayed in green (instead of the active frequency) if the radio is performing self-test.
Method 2	The enter data/transfer method is selected when an alphanumeric key is pressed (data is entered onto the scratch pad line). In this mode, five yellow inward pointing arrows are displayed beside the active line keys. Enter a new ADF frequency on the scratch pad line using the alphanumeric keys, and then press the ACTIVE, PRE 1, PRE 2, PRE 3, or PRE 4 line key. The new frequency (if valid) is transferred to the selected line on both CDU's. If transfer is to the ACTIVE line, the radio retunes and the old active frequency is discarded. Note that decimal points are not entered. For example, enter 16005 to select 1600.5 kHz. Enter 72 to select 720.0 kHz.

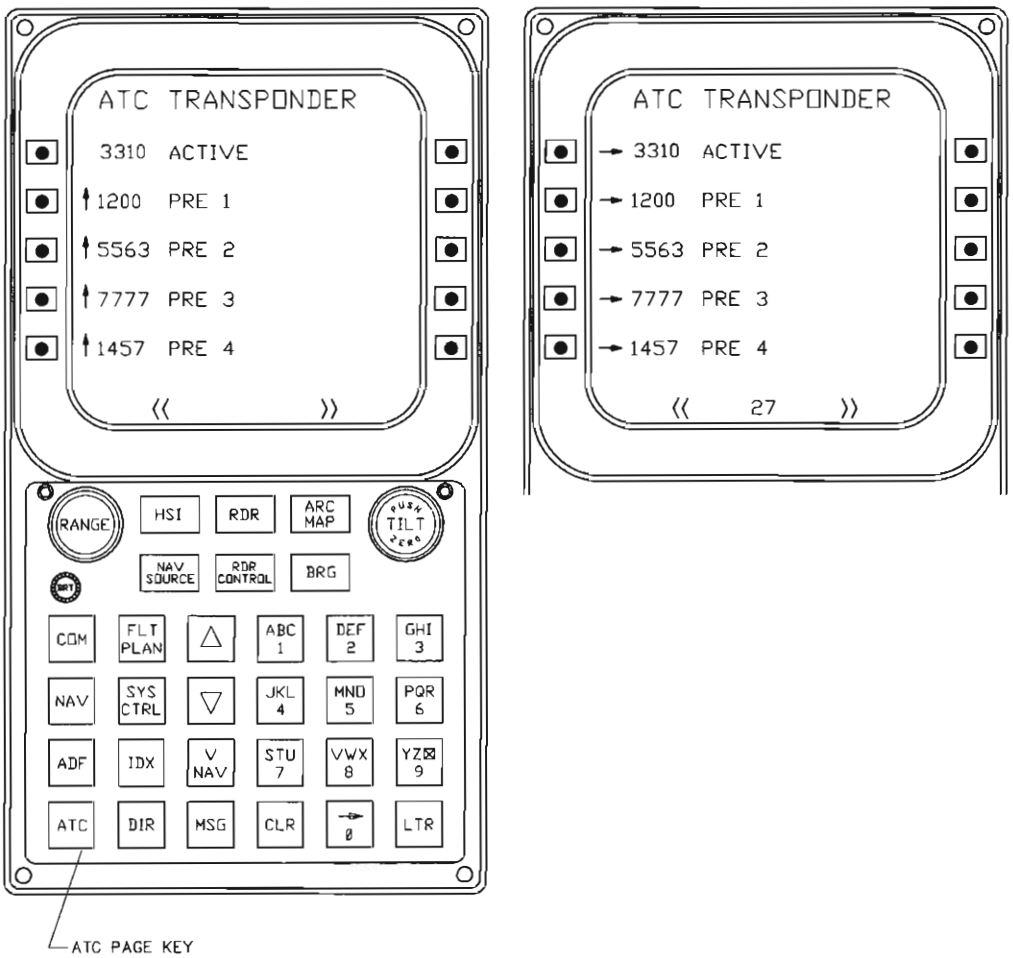

CDU-850A Control Display Unit, Controls and Displays
Figure 3-5 (Sheet 7 of 11)

Table 3-5. CDU-850A Control Display Unit, Controls and Displays (Cont).

CONTROL OR DISPLAY	FUNCTION/DESCRIPTION
ATC page key	Press this key to display the ATC tuning page.
ATC tuning page	This display shows the transponder active reply code, as well as the available preset codes. This page provides two secondary methods of selecting the ATC transponder reply code. The RTU is the primary ATC code selector. Only one TDR-90 is active at any specific time. The left or right TDR is selected on the center reversion panel.
Method 1	The active code load method is available when the scratch pad line is blank. In this mode, four white upward pointing arrows are displayed beside the preset line keys. Press the line key next to the displayed PRE 1, PRE 2, PRE 3, or PRE 4 code to channel the transponder to that code. The code on the selected line is copied to the ACTIVE line; the old active code is discarded. Note that the ACTIVE code display line updates automatically if the transponder is rechanneled by an RTU. The active code is normally displayed in green, but is replaced by red dashes if the transponder is inoperative. STANDBY is displayed in white (instead of ACTIVE) if standby mode is selected on the RTU ATC page.
Method 2	The enter data/transfer method is selected when an alphanumeric key is pressed (data is entered onto the scratch pad line). In this mode, five yellow inward pointing arrows are displayed beside the active line keys. Enter a new ATC reply code on the scratch pad line using the alphanumeric keys, and then press the ACTIVE, PRE 1, PRE 2, PRE 3, or PRE 4 line key. The new code (if valid) is transferred to the selected line on both CDU's. If transfer is to the ACTIVE line, the transponder rechannels and the old active code is discarded. Note that trailing zeros are assumed. For example, enter 27 to select 2700. Enter 001 to select 0010.

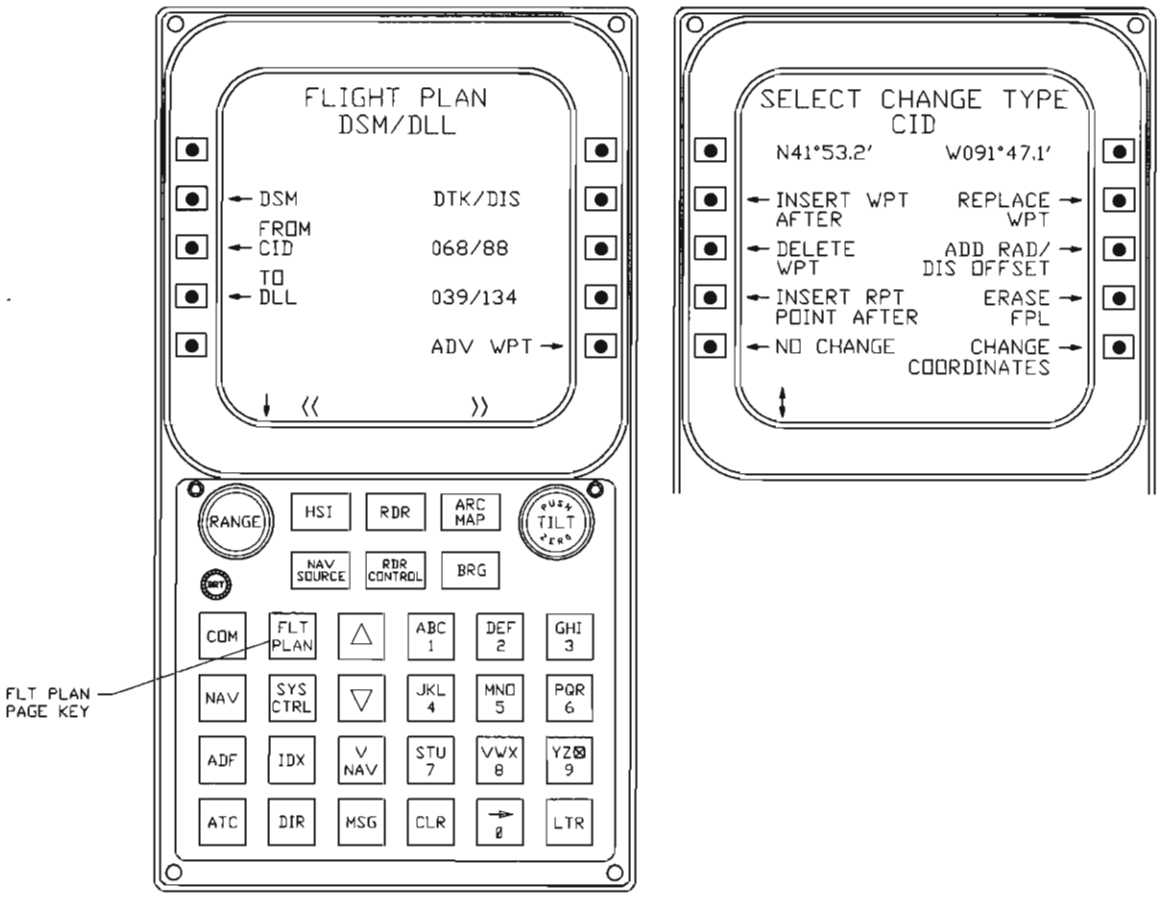

CGO-0234-11-AC-0

CDU-850A Control Display Unit, Controls and Displays
Figure 3-5 (Sheet 8 of 11)

Table 3-5. CDU-850A Control Display Unit, Controls and Displays (Cont).

CONTROL OR DISPLAY	FUNCTION/DESCRIPTION
FLT PLAN page key	Press this key to display the FLIGHT PLAN page.
FLIGHT PLAN page	This display lists the waypoints in the current FMS flight plan. Each waypoint ident is displayed with desired track and distance between waypoints. The second line of the display shows the first/last waypoints in the flight plan. The remainder of this page shows three waypoints from the flight plan. When the flight plan contains more than three waypoints, the scroll arrow appears on the lower-left of the display. Press the scroll keys to slew the list up/down one waypoint-per-push. TO and FROM labels are displayed above the waypoints which define the selected leg of the flight plan. The TO waypoint is displayed in magenta, others are displayed in white. These labels scroll with the associated waypoints as the list is slewed. Push the FLT PLAN page key twice to scroll the TO waypoint directly to the middle of the page. The right portion of this page displays computed DTK/DIS parameters by each waypoint identifier. The desired track angle (DTK) between consecutive waypoints is displayed in degrees. The distance (DIS) between consecutive waypoints is displayed in nautical miles. The total distance between the waypoints along the flight plan is displayed after the last waypoint. The last display screen shows the total distance between the waypoints along the flight plan, and provides an ADD WPTS option. Press this line key to add waypoints to the end of the flight plan. The procedure is as described below for INSERT WPT AFTER. Press the ADV WPT line key to advance to the next leg of the flight plan. To change the flight plan, scroll through the list and display the waypoint where the change is to be made. Then press the line key adjacent to that waypoint to display the SELECT CHANGE TYPE page. This page can be selected by only one CDU at a time.
SELECT CHANGE TYPE page	This display shows options which are available to change the flight plan at the selected waypoint. Press the adjacent line key to select an option. Pages are then displayed to effect the change. Note that DTK/DIS parameters automatically update when a change is made. The second line of the display shows the waypoint where the flight plan will be altered. The next line displays the waypoint latitude and longitude. The scroll arrow is displayed on the lower-left of this page. Press the scroll keys to slew through the waypoint list, and thereby move the point of flight plan modification.
INSERT WPT AFTER	Press this line key to add a new waypoint just after the selected waypoint. Then, enter a route number or an ident for the new waypoint. If the ident is user defined (not found in the data base), a boxed-x is displayed with the new ident. Prompts are displayed to define the waypoint location or to add an offset from the station (if desired). The CHP joystick and the MFD map display may also be used to add a waypoint. Position the joystick symbol on the desired waypoint location; then press the ENT line key on the MFD. The waypoint ident (if a navaid) or ⊕JOY then appears on the CDU; press the ENTER and OK line keys to complete the operation.
DELETE WPT	Press this line key to remove the selected waypoint from the flight plan.

Table 3-5. CDU-850A Control Display Unit, Controls and Displays (Cont).

CONTROL OR DISPLAY	FUNCTION/DESCRIPTION
INSERT RPT POINT AFTER	Press this line key to add a reporting point to the flight plan. The procedure is similar to that for inserting a waypoint.
NO CHANGE	Press this line key to return to the FLIGHT PLAN page without making a change.
REPLACE WPT	Press this line key to remove the selected waypoint, and add a new waypoint in its place. The procedure is similar to that for inserting a waypoint.
ADD RAD/DIS OFFSET	Press this line key to add a radial/distance offset to the selected (already existing) waypoint, or to change the offset already assigned to the selected waypoint. Enter the offset values, press the OFFSET COMPLETE line key, verify the waypoint coordinates, and press the OK line key. The waypoint (with offset) is then inserted into the flight plan. The waypoint ident is now displayed with an asterisk followed by the offset values.
ERASE FPL	Press this line key to erase the entire flight plan. A verification page is then displayed. Press the YES, ERASE ALL WPTS line key to delete every waypoint in the flight plan.
CHANGE COORDINATES	This option is available only if the waypoint selected for change is a user-defined waypoint, no offset is defined, and the waypoint is not used elsewhere in the flight plan or in any route. If all these conditions are met, a page is displayed to change the coordinates of this waypoint.

This page intentionally left blank.

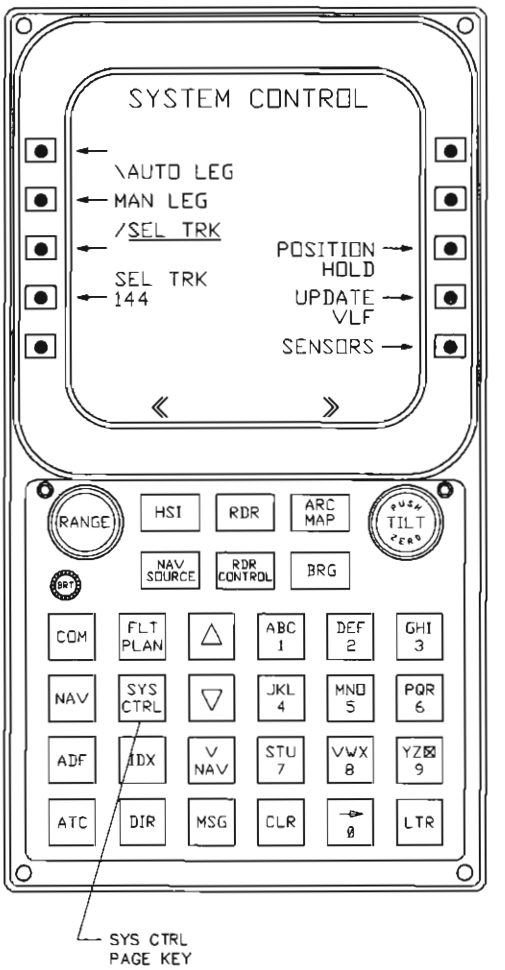

CGO–0234–11–AC–0

CDU-850A Control Display Unit, Controls and Displays
Figure 3-5 (Sheet 9 of 11)

Table 3-5. CDU-850A Control Display Unit, Controls and Displays (Cont).

CONTROL OR DISPLAY	FUNCTION/DESCRIPTION
SYS CTRL page key	Press this key to display the SYSTEM CONTROL page.
SYSTEM CONTROL page	This display provides primary control selections for the FMS system. These control functions are the selected navigator mode, selected track angle, position fixing, VLF position update, and NAV sensor selections. Available navigator modes are AUTO LEG, MAN LEG, and SEL TRK. The selected mode is underlined and displayed in green, other modes are white. This mode is also annunciated on the upper-left of the ND if FMS is selected as the active NAV source.
AUTO LEG mode	Press this line key to select AUTO LEG mode. This is the normal navigator mode. In this mode, the list of waypoints in the flight plan is flown sequentially; the FMS automatically advances waypoints throughout the flight.
MAN LEG mode	Press this line key to select MAN LEG mode. In this mode, the list of waypoints in the flight plan is flown sequentially (as in AUTO LEG mode), but the FMS does not automatically advance waypoints. When the FMS determines that a leg of the flight plan has been completed, the ND/MFD station and distance displays flash. The operator then changes legs by pressing the ADV WPT line key on the FLIGHT PLAN page. Note that the aircraft will continue through the waypoint and leave the flight plan if the waypoint is not advanced.
SEL TRK mode	Press this line key to select SEL TRK mode. In this mode, the flight plan consists of a selected track through the TO waypoint and beyond. There is no return to the rest of the flight plan (other waypoints) in this mode. When SEL TRK mode is selected, a line of dashes is displayed after the current TO waypoint on the FLIGHT PLAN page to indicate a break in the flight plan.
SEL TRK	This display appears only when SEL TRK mode is selected. A selected track angle is displayed which is the recommended track angle to the current TO waypoint. Press the line key by this display to enter a different track angle. The CHP CRS knob and PUSH DIRECT switch also change the track angle.
POSITION HOLD	Press this line key to check or update aircraft present position. Press this key when exactly over a position fix. A page is displayed which shows the aircraft position at the time the line key was pressed. The operator then enters the ident of the fix, or latitude/longitude coordinates to update the FMS position value. A CANCEL UPDATE line key aborts any change and returns display to the SYSTEM CONTROL page.
UPDATE VLF	Press this line key to check or update the VLF NAV position value and system time. A page is displayed which shows the difference from the FMS position to the VLF position in nautical miles and degrees. Press an UPDATE VLF FROM FMS line key to cause the FMS to send a position and time update to the CMA-764; press the CANCEL UPDATE line key to abort any change and return display to the SYSTEM CONTROL page.
SENSORS	Press this line key to check or change the VOR/DME and VLF/OMEGA navigation sensors available for use by the FMS. The VOR/DME sensors and the VLF/OMEGA sensors may be selected or deselected as functional groups. VLF/OMEGA stations may also be selected or deselected individually. VLF/OMEGA received signal strength may also be displayed.

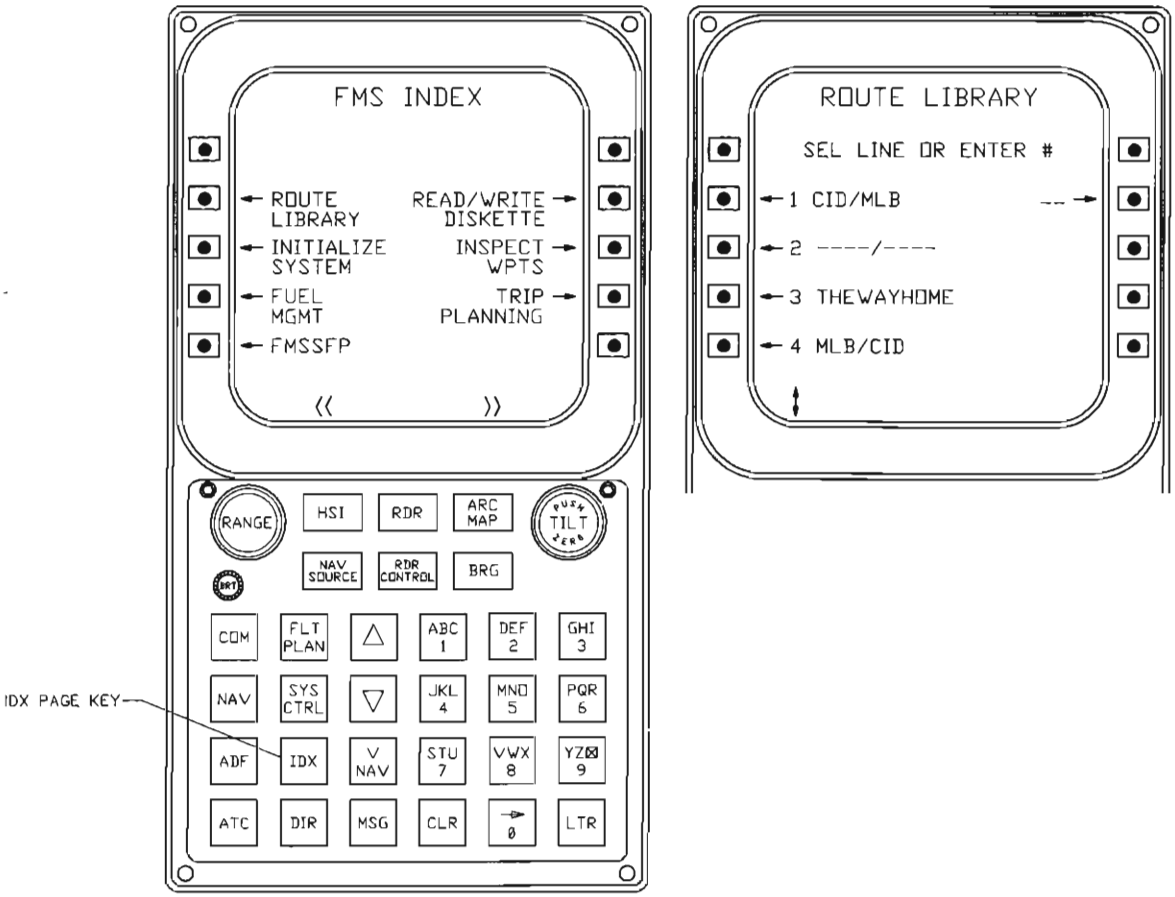

CDU-850A Control Display Unit, Controls and Displays
Figure 3-5 (Sheet 10 of 11)

Table 3-5. CDU-850A Control Display Unit, Controls and Displays (Cont).

CONTROL OR DISPLAY	FUNCTION/DESCRIPTION
IDX page key	Press this key to display the FMS INDEX page.
FMS INDEX page	This display accesses the index functions of the FMS system. These include the route library, system initialization, fuel management, disk drive control, waypoint inspection, and trip planning functions.
ROUTE LIBRARY	Press this line key to display the ROUTE LIBRARY page. This page shows routes which have been defined and stored in the FMS memory. Any route may be selected for display or modification. The ROUTE LIBRARY page displays four routes per screen. Each route display line consists of the route number (left of the screen) followed by the route name. Press the scroll keys to view four subsequent routes. Routes are also scrolled by entering the 2-digit desired route number, and then pressing the active right line key. Route names are normally defined as the first/last waypoint in the route. Empty routes are displayed as ----/----. Routes may be named by alphanumerics (10 characters max, character 1 must not be a number). To display or modify a route, scroll through the list until the route is displayed. Then press the left line key adjacent to the route. A route page is displayed which shows the first three waypoints in the selected route. The route can then be displayed, created, or modified by procedures similar to those used on the FLIGHT PLAN pages. To load the active flight plan into any route, enter 00 as the waypoint or route number.
INITIALIZE SYSTEM	Press this line key to display the initialization page. This page shows the current time/date, data base expiration date, present position estimate, and the ident of the nearest navaid station. Press the ALL DATA OK line key if this page is correct. If the time/date line is incorrect, update the on-side ARINC 429 clock unit. If this clock has failed, a reversionary page is displayed and the operator must manually enter a time and date on the CDU. If the data base has expired, a warning message is displayed to alert the operator. Press a line select key either to use the expired data base or to update the data base at this time (using DBU). If the present position estimate is incorrect, press the UPDATE POSITION line key on the lower-left of the page. A page is displayed to update the current aircraft position by entering a latitude/longitude, a waypoint ident, a VOR/DME fix, or to accept the current system position. The ident of the nearest navaid station is displayed for pilot verification of position. This ident is followed by the computed radial and distance from the station.
FUEL MANAGEMENT	Press this line key to monitor continuously updating fuel used, fuel remaining, and endurance parameters. Enter the fuel remaining weight (in pounds) to initiate this function.
FMSSFP	This line key selects a system troubleshooting tool. Further description is not provided at this time.

Table 3-5. CDU-850A Control Display Unit, Controls and Displays (Cont).

CONTROL OR DISPLAY	FUNCTION/DESCRIPTION
READ/WRITE DISKETTE	Press this line key to read or write data files using the DBU. This unit may be used to upload route, checklist, crew notes, and data base files to the FMS. The DBU can also be used to download route, engine data, and maintenance data files onto a diskette. When READ FILE FROM DISKETTE is selected, a directory of the disk is then displayed. Press the adjacent line key to read a selected file from the disk. When WRITE FILE TO DISKETTE is selected, a list of files which may be stored is displayed. Press the adjacent line key to write a selected file onto disk.
INSPECT WPTS	Press this line key to display the INSPECT WPTS page. This page is used to display the parameters defining each stored waypoint, or to display (delete) operator defined waypoints which are no longer used in any route or flight plan. To inspect the stored parameters for a specific waypoint, enter the ident of the waypoint and then press the ENTER line key. The following parameters for that waypoint are then recalled from memory and displayed: WPT, TYPE, CLASS, ICAO, LOCATION, FREQ, ELEV, and VAR. Two line keys are active on this page. Press the USE NAVAID line key to enable (or disable) use of the waypoint as a source of navigation data. Press the DIFF WPT line key to return to the previous page, so a different waypoint can be inspected. To display (delete) operator defined waypoints not presently used in any route or flight plan, press the lower-left line key. These waypoints are alphabetically displayed; the total number of unused waypoints is displayed on the last line. Press the scroll keys to slew through the list; press left/right line key to display the waypoint description/delete the waypoint from memory.
TRIP PLANNING	Press the TRIP PLANNING line key to calculate direct bearing, distance, estimated-time-en route between waypoints or along routes, and the estimated amount of fuel required for the trip. Press left line keys to enter a FROM waypoint, a TO waypoint, an estimated ground speed (EST GS), and an estimated fuel flow rate (EST LBS/HR). BRG/DIS, ETE, and FUEL RQD parameters are then computed and displayed.

This page intentionally left blank.

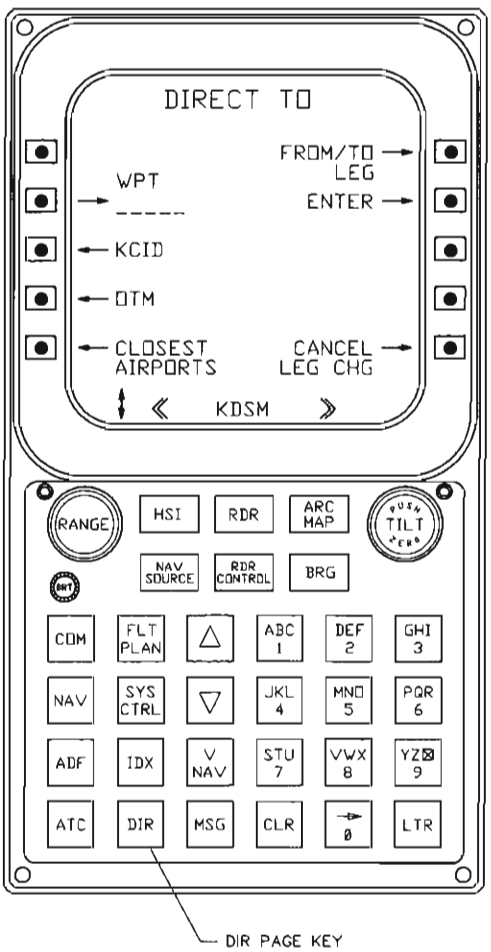

CGO-0234-11-AC-0

CDU-850A Control Display Unit, Controls and Displays
Figure 3-5 (Sheet 11 of 11)

Table 3-5. CDU-850A Control Display Unit, Controls and Displays (Cont).

CONTROL OR DISPLAY	FUNCTION/DESCRIPTION
DIR page key	Press this key to display the DIRECT TO page.
DIRECT TO page	This display provides four methods of initiating a course to a selected location. A direct-to course may be executed to a waypoint not on the flight plan, to a waypoint on the flight plan (direct to any waypoint or establish a FROM/TO leg between any two waypoints), or to a nearby airport. When a direct-to course is selected, DIRECT TO is displayed above the TO waypoint ident on the FLIGHT PLAN page. Press the CANCEL LEG CHG line key at any time to abort the direct-to operation.
Off-flight-plan waypoint	Leave the flight plan on a course direct-to an off-flight-plan waypoint using the following methods. Enter the ident of the destination waypoint and then press the ENTER line key. A page is displayed to verify waypoint coordinates; a radial/distance offset may be added if desired. Press the OK line key to complete the operation. If no ident is entered or if the destination waypoint is not defined in the data base, a page is displayed to define the direct-to point. A radial/distance offset may be added if desired. Press the OK line key to complete the operation. If the ident of a destination waypoint is displayed on the scratch pad line, press the WPT line key to transfer this ident to the WPT line. Then press the ENTER and OK line keys to complete the operation. The CHP joystick and the MFD map display may be used to select a destination waypoint. Position the joystick symbol on the desired direct-to location; then press the ENT line key on the MFD. The waypoint ident (if a navaid) or ⊕JOY appears on the scratch pad line of the CDU. Press the WPT, ENTER, and OK line keys to complete the direct-to operation.
On-flight-plan waypoint	Press the left side (3 or 4) line key adjacent to a displayed waypoint ident to immediately initiate a course direct-to that point. The scroll arrow is displayed on the lower-left of this page. Press the scroll keys to slew through the waypoint list, and display any waypoint in the flight plan by line key 3 or 4. The current TO waypoint is displayed in magenta, others are white.
FROM/TO leg	Press the FROM/TO LEG line key to establish a new direct flight leg between any two waypoints in the flight plan. Note that all waypoints in the flight plan between the selected TO and FROM waypoints are now erased from the flight plan. Pages are displayed to select the FROM and then the TO waypoint which define the new leg. Use the scroll keys and left side line keys to select waypoints from the flight plan. Note that the TO waypoint must be after the FROM waypoint in the flight plan (a reverse direction leg is not permitted).
CLOSEST AIRPORTS	Press the CLOSEST AIRPORTS line key to display the idents of the three nearest airports, followed by bearing/distance to the airport and the length of the longest runway (if available). The airports are listed in order of increasing distance from present position. Press the line key adjacent to an airport ident to initiate a course direct-to that airport. The FLIGHT PLAN page is then displayed.

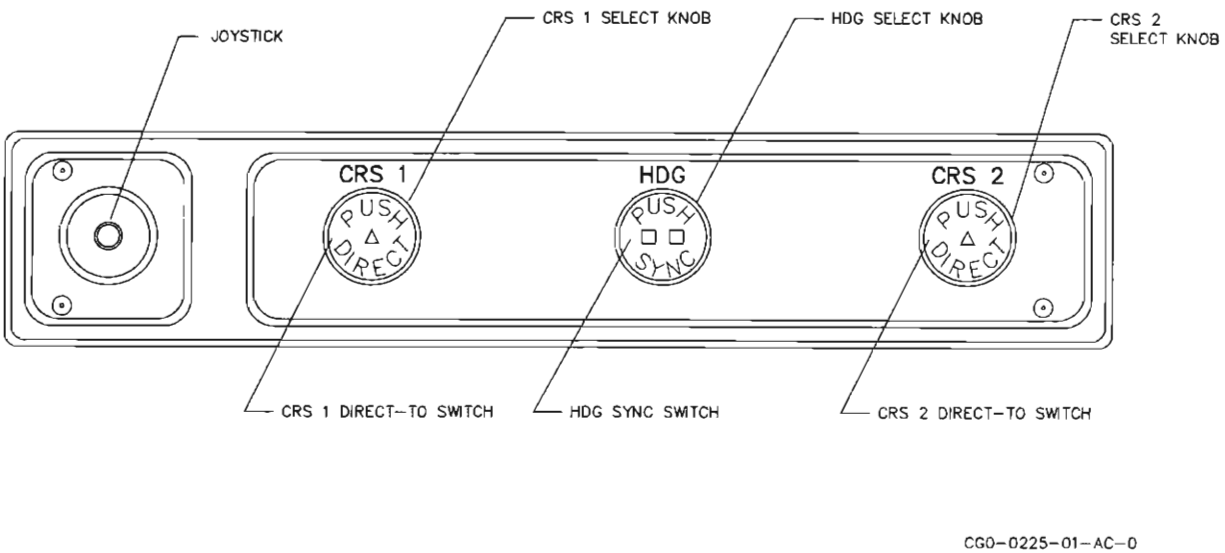

CHP-850 Course/Heading Panel, Controls
Figure 3-6

Table 3-6. CHP-850 Course/Heading Panel, Controls.

CONTROL	FUNCTION/DESCRIPTION
Joystick	Move the joystick to position the active cursor on the MFD. The joystick may be used to scroll MFD page data, or to select an FMS waypoint on the MFD map display.
CRS 1 select knob	Rotate the CRS 1 knob to change the left side selected course, as indicated by the course arrow display on the ND. This knob normally adjusts the active course (selected by NAV SOURCE page key on CDU). The preset course is adjusted only when the PRESET NAV SOURCE page is displayed on the CDU. Clockwise rotation increases the selected course angle. When SEL TRK is the FMS navigator mode, this knob selects the FMS track angle to the TO waypoint. This knob is not active in other FMS modes.
CRS 1 direct-to switch	Press this center PUSH DIRECT switch to zero any course deviation, and establish a course directly to the active NAV source. When SEL TRK is the FMS navigator mode, this switch selects an FMS track directly to the TO waypoint. This switch is not active in other FMS modes.
HDG select knob	Rotate the HDG knob to change the selected heading (indicated by the heading bug display on the ND). This knob simultaneously controls the heading bug display on both NDs. Clockwise rotation increases the selected heading angle.
HDG sync switch	Press this center PUSH SYNC switch to synchronize the heading bug to the current aircraft heading (indicated by lubber line on ND). This switch syncs the heading bug on both ND displays.
CRS 2 select knob	Rotate this knob to change the right side selected course, as described above for CRS 1.
CRS 2 direct-to switch	Press this switch to zero any deviation from the active course, as described above for CRS 1.

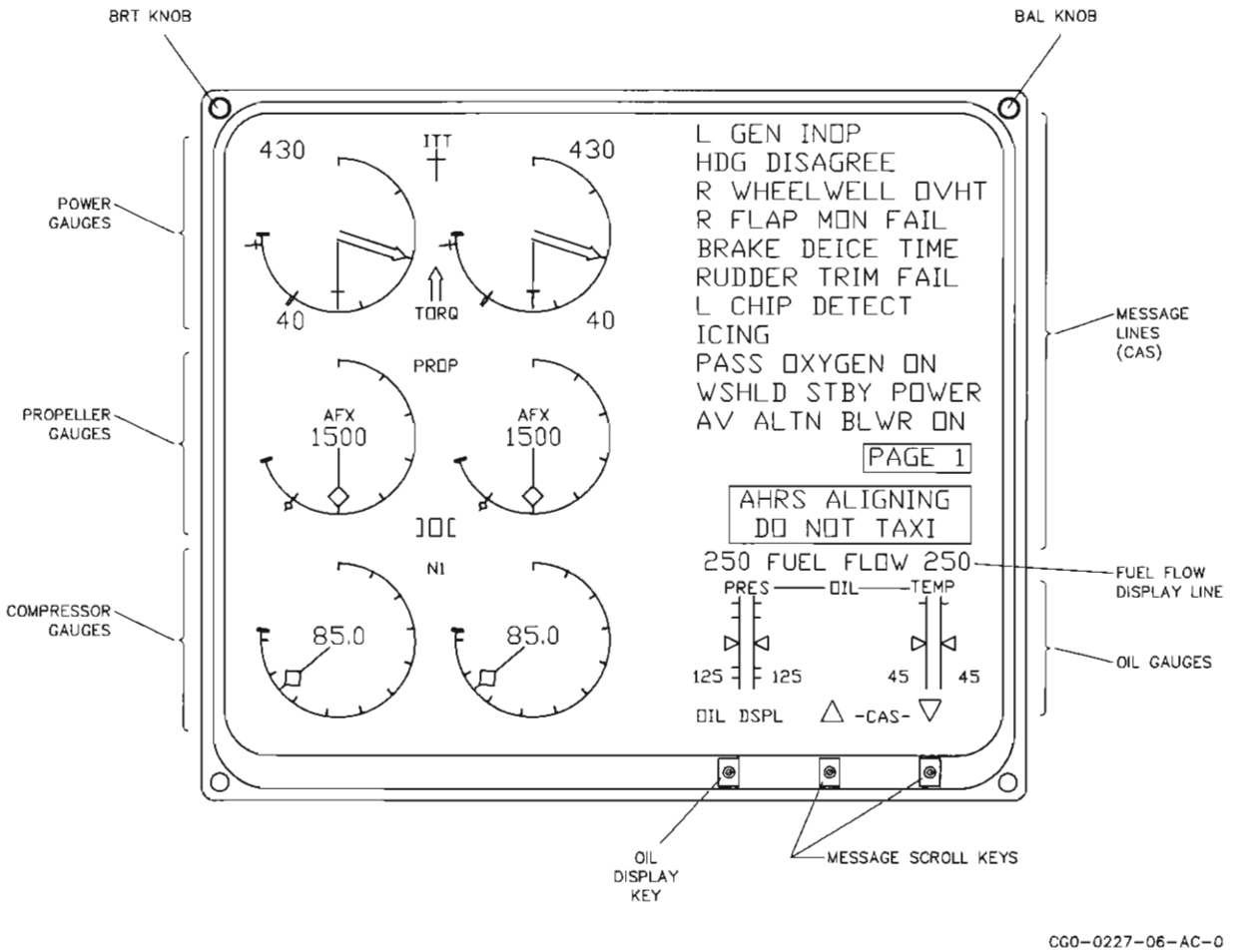

ECD-870 Engine/Caution Display, Controls and Displays
Figure 3-7 (Sheet 1 of 6)

Table 3-7. ECD-870 Engine/Caution Display, Controls and Displays.

CONTROL OR DISPLAY	FUNCTION/DESCRIPTION
BRT knob	Rotate this knob to adjust display brightness.
BAL knob	Rotate this knob to adjust display balance.
Power gauges	The power gauges indicate left and right engine interstage turbine temperature (ITT) and torque (TORQ). ITT is displayed in degrees C. TORQ is displayed as a percentage of maximum allowable torque.
Propeller gauges	The propeller gauges indicate left and right engine propeller (PROP) speed, autofeather arm, and propeller speed imbalance. PROP is displayed in rpm. AFX annunciates when the autofeather system is armed. PROP speed imbalance is shown by a moving 2-square display window.
Compressor gauges	The compressor gauges indicate left and right engine gas compressor speed (N1). N1 is displayed as a percentage of maximum allowable speed.
Oil gauges	The oil gauges indicate left and right engine oil pressure (PRES) and oil temperature (TEMP). PRES is displayed in psi. TEMP is displayed in degrees C.
Oil display key	Press the OIL display key to alternately select and deselect the oil gauge display. Both PRES and TEMP gauges are controlled by this key.
Fuel flow display line	The fuel flow display line digitally indicates left and right engine rate of fuel consumption. FUEL FLOW is displayed in pounds-per-hour.
Message lines	The message lines display existing caution, status, and advisory alerts. Caution messages are displayed first; cautions annunciate faults and are displayed in yellow. Status messages are displayed next; these annunciate conditions of interest and are displayed in white. Advisory messages are displayed last; advisories annunciate completion of a selected task and are displayed in green. The most current message of each type is always displayed first in its section.
Message scroll keys	Press the up/down message scroll key to display the previous/next page of messages. These keys are active only when more than one message page exists.

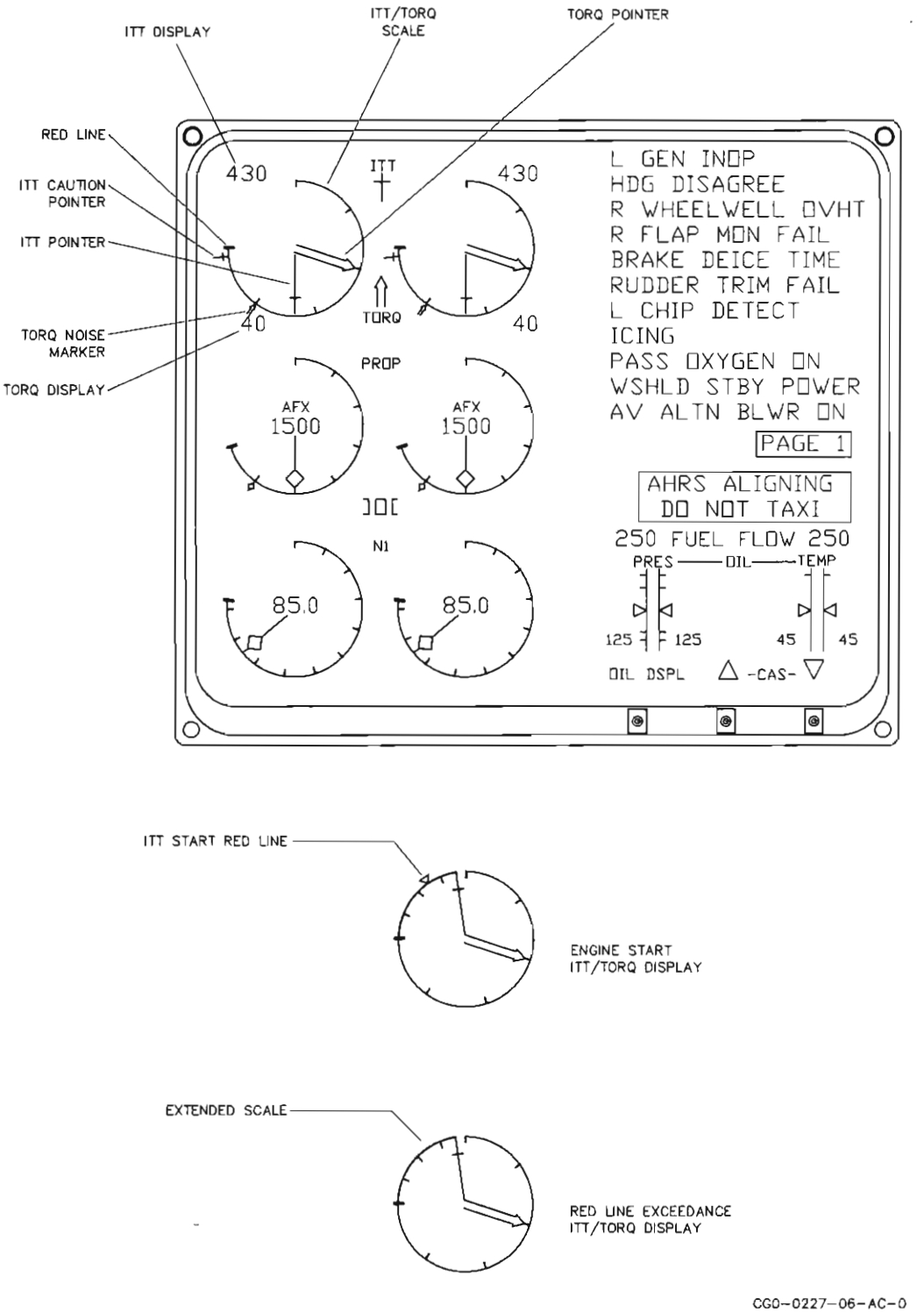

ECD-870 Engine/Caution Display, Controls and Displays
Figure 3-7 (Sheet 2 of 6)

Table 3-7. ECD-870 Engine/Caution Display, Controls and Displays (Cont).

CONTROL OR DISPLAY	FUNCTION/DESCRIPTION
Power gauges	The power gauges indicate left and right engine interstage turbine temperature (ITT) and torque (TORQ). ITT is displayed in degrees C. TORQ is displayed as a percentage of maximum allowable torque. The left gauge monitors the left aircraft engine. The right gauge monitors the right engine.
ITT/TORQ scale	The ITT/TORQ scale normally has six index marks around its perimeter while the engine is running. The top index mark is the minimum gauge reading. The last index mark (max cw) is the maximum normal operating limit (red line). The red line ITT value is provided by the EDC engine data concentrator; the minimum index mark is 500 °C less than this value; each index mark indicates 100 °C of ITT. The red line TORQ value is provided by the EDC; the minimum index mark is 0%; each index mark indicates 20% of red line torque. During an engine start, the ITT has a higher red line limit. TORQ limits are unchanged. The ITT/TORQ scale extends cw past the old red line mark to the tip of the ITT pointer. Scale markings are provided, but the scale factor is changed. A triangle is displayed as the new ITT red line limit mark. After the engine is running, the scale goes to normal format. During a red line exceedance, the ITT/TORQ scale extends as described above for engine start, except the triangle mark is not displayed.
ITT caution pointer	The ITT caution pointer is displayed on the outside of the scale. The pointer value is provided by the EDC.
ITT pointer	This T-tip pointer rotates about the gauge to indicate existing ITT. This value is provided by the EDC. The pointer is white (normal) or red (exceedance).
ITT display	This display is a digital readout of existing ITT. This value is the numerical equivalent of the ITT pointer indication; ITT display/pointer colors are identical.
TORQ pointer	This arrow-tip pointer rotates about the gauge to indicate existing percentage of TORQ. This value is provided by the EDC. The pointer is green (normal) or red (exceedance).
TORQ display	This display is a digital readout of existing percentage of TORQ. This value is the numerical equivalent of the TORQ pointer indication; TORQ display/pointer colors are identical.
TORQ noise marker	The TORQ noise marker indicates the noise compliance torque value. This value is provided by the EDC.

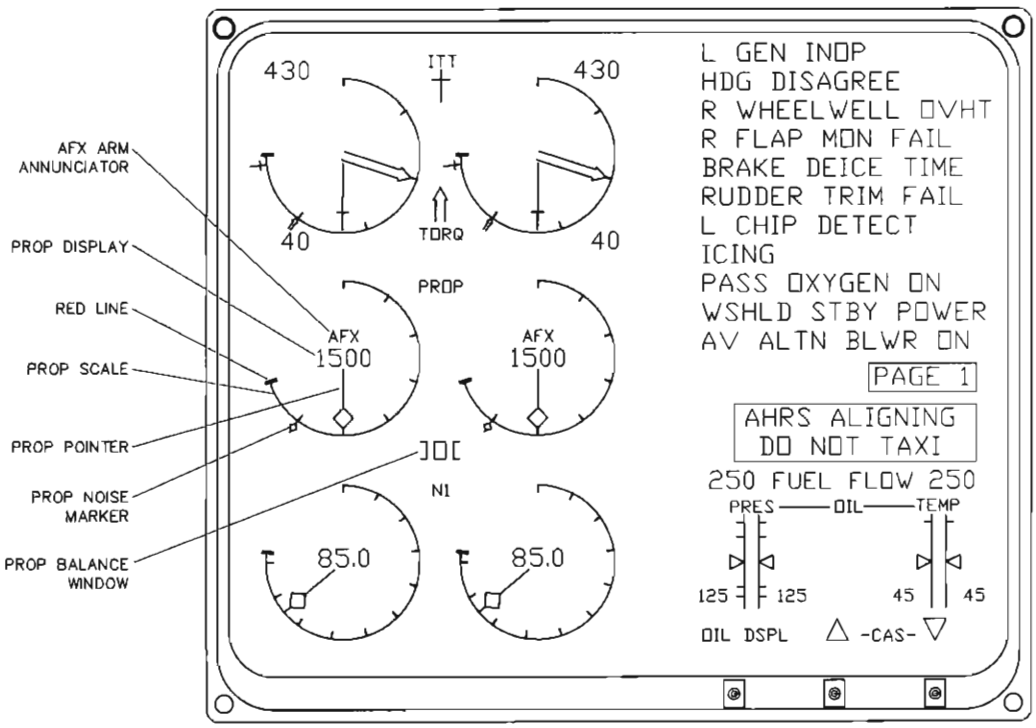

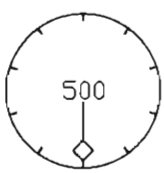

SPEEDS BELOW 1050 RPM
PROP DISPLAY

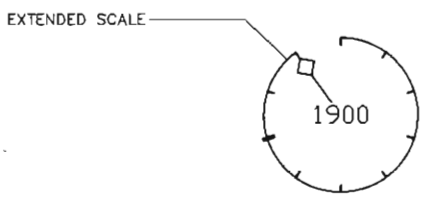

RED LINE EXCEEDANCE
PROP DISPLAY

CGO-0227-06-AC-0

ECD-870 Engine/Caution Display, Controls and Displays
Figure 3-7 (Sheet 3 of 6)

Table 3-7. ECD-870 Engine/Caution Display, Controls and Displays (Cont).

CONTROL OR DISPLAY	FUNCTION/DESCRIPTION
Propeller gauges	The propeller gauges indicate left and right engine propeller (PROP) speed, autofeather arm, and propeller speed imbalance. PROP is displayed in rpm. AFX displays when the autofeather system is armed. PROP speed imbalance is shown by a moving 2-square display window. The left gauge monitors the left aircraft engine. The right gauge monitors the right engine.
PROP scale	At speeds below 1050 rpm, the PROP scale is a complete circle. Ten index marks are displayed around the perimeter in this format, each indicates 100 rpm. The top index mark is 0 rpm; a complete revolution around this scale is 1000 rpm. At speeds above 1100 rpm, the gauge scaling is unchanged up to the maximum PROP speed mark. Each index mark indicates 100 rpm; the top index mark is 1000 rpm. A maximum (red line) PROP speed mark is displayed on the scale in red. This value is provided by the EDC. The PROP scale and pointer change color as follows with increasing prop speed: white (less than ground operation limit minimum), red (less than ground operation limit maximum), white (less than vibration limit minimum), red or white (less than vibration limit maximum), green (less than noise limit), cyan (less than maximum limit), and red (greater than maximum limit). During a red line exceedance, the PROP scale extends (in red) cw past the red line mark to the tip of the PROP pointer (maximum of 1900 rpm).
PROP pointer	This box-tip pointer rotates about the gauge to indicate existing PROP speed (up to a maximum of 1900 rpm). This value is provided by the EDC. The pointer color is identical to the scale color.
PROP display	This display is a digital readout of existing PROP speed. This value is the numerical equivalent of the PROP pointer indication; PROP display/pointer colors are identical.
PROP noise marker	The PROP noise marker indicates the noise compliance prop value. This value is provided by the EDC.
PROP balance window	This display indicates left and right propeller synchronization. The display is active when the N1 value of both engines is greater than 40% and the difference in PROP speeds is at least 0.625 rpm. PROP speed difference is indicated by a moving string of squares, viewed through a window which is two squares long. Relative motion is toward the side with the higher PROP speed.
AFX arm annunciator	When the autofeather system is armed, AFX is displayed in green. This system feathers (moves) the propeller to reduce yaw drag if an engine fails.

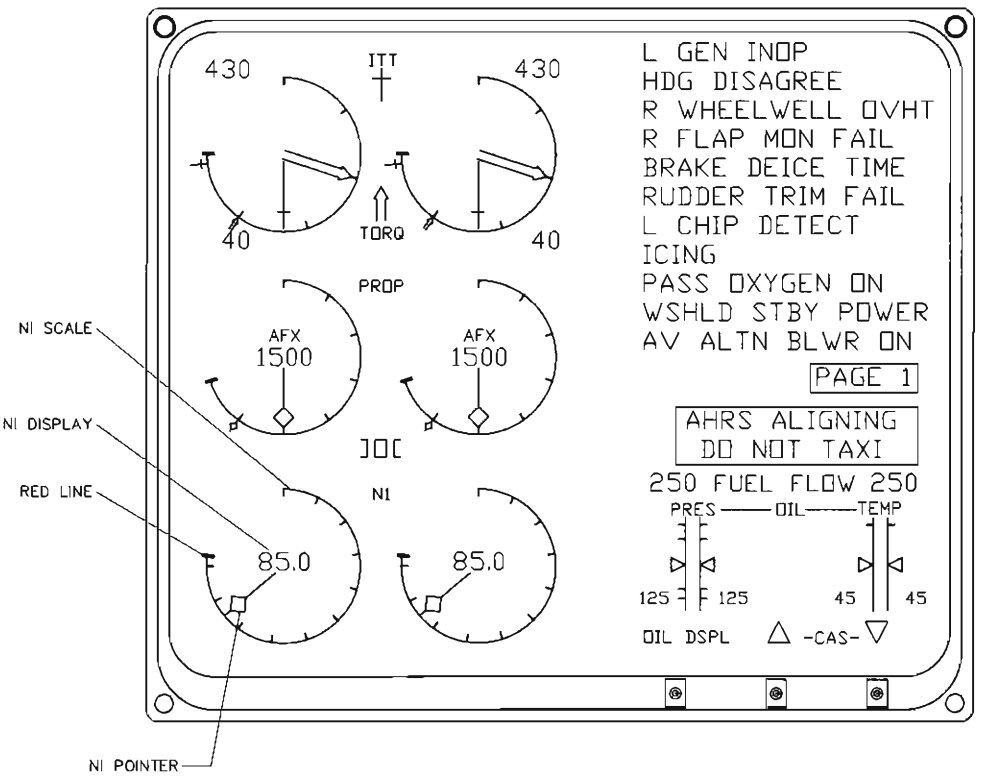

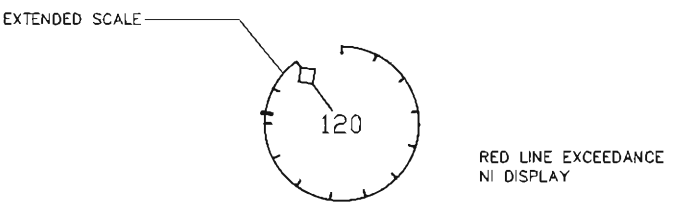

CGO-0227-06-AC-0

ECD-870 Engine/Caution Display, Controls and Displays
Figure 3-7 (Sheet 4 of 6)

Table 3-7. ECD-870 Engine/Caution Display, Controls and Displays (Cont).

CONTROL OR DISPLAY	FUNCTION/DESCRIPTION
Compressor gauges	The compressor gauges indicate left and right engine gas compressor speed (N1). N1 is displayed as a percentage of maximum allowable speed. The left gauge monitors the left aircraft engine. The right gauge monitors the right engine.
N1 scale	The N1 scale has 11 index marks around its perimeter during normal engine operation. The top index mark is the minimum gauge reading of 0%; the last index mark (9 o'clock) represents 100%. Each index mark represents 10% of N1 speed. Maximum and minimum N1 speed values are provided by the EDC. A maximum (red line) N1 speed mark is displayed on the scale in red. The minimum N1 speed is displayed as the bottom of the green scale. During a red line exceedance, the N1 scale extends cw past the red line mark to the tip of the N1 pointer (maximum of 130%).
N1 pointer	This box-tip pointer rotates about the gauge to indicate existing percentage of N1 (up to 130%). This value is provided by the EDC. The pointer color is identical to the scale color.
N1 display	This display is a digital readout of existing percentage of N1. This value is the numerical equivalent of the N1 pointer indication; N1 display/pointer colors are identical.

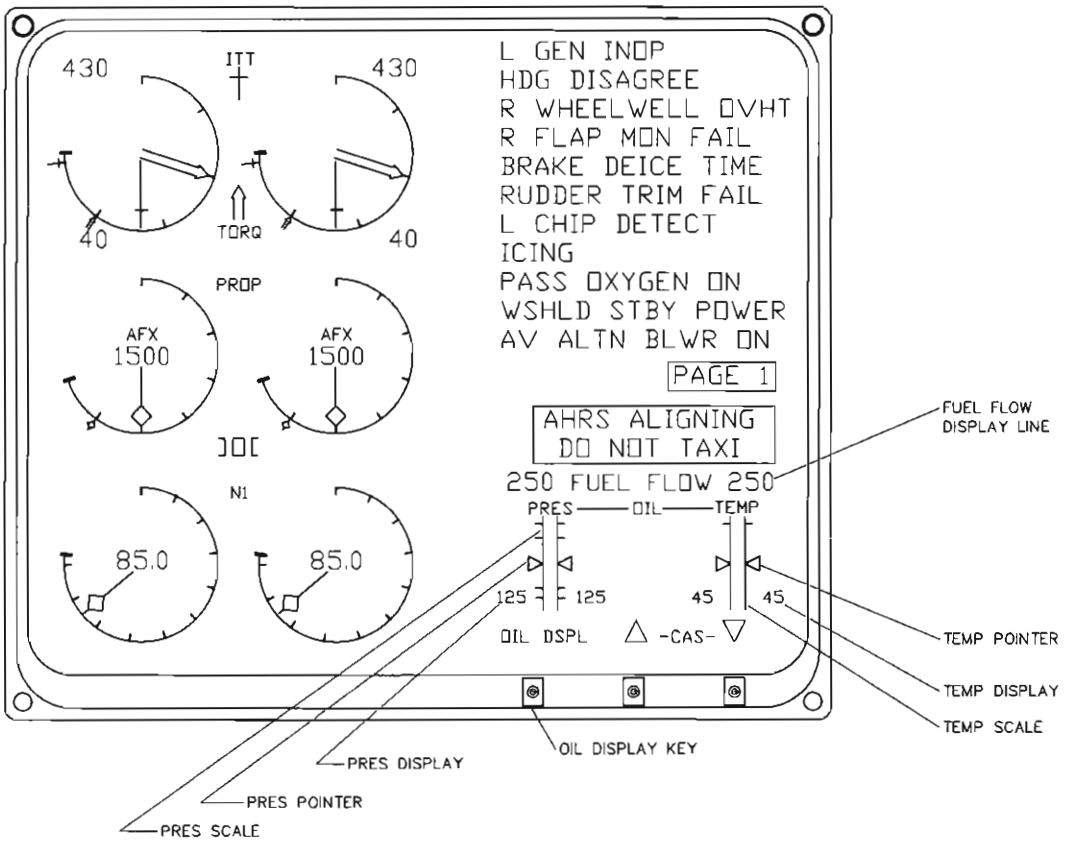

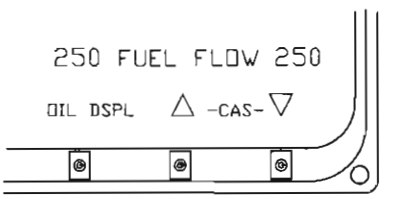

FUEL FLOW DISPLAY WHEN OIL DISPLAY DESELECTED

CGO-0227-06-AC-0

ECD-870 Engine/Caution Display, Controls and Displays
Figure 3-7 (Sheet 5 of 6)

Table 3-7. ECD-870 Engine/Caution Display; Controls and Displays (Cont).

CONTROL OR DISPLAY	FUNCTION/DESCRIPTION
Oil gauges	The oil gauges indicate left and right engine oil pressure (PRES) and oil temperature (TEMP). PRES is displayed in psi. TEMP is displayed in degrees C.
PRES scale	The PRES scale is a vertical 2-line scale; four index marks divide the scale into five sections. From bottom to top, these sections are defined as follows: lower-warning (red), lower-caution (yellow), normal (green), upper-operating (white), and upper-warning (red). Index mark values are provided by the EDC.
PRES pointer	This triangular pointer slides up and down the vertical PRES scale to indicate existing oil pressure. This value is provided by the EDC. The pointer color is identical to the scale color.
PRES display	This display is a digital readout of existing oil pressure. This value is the numerical equivalent of the PRES pointer indication; PRES display/pointer colors are identical.
TEMP scale	The TEMP scale is a vertical 2-line scale; one index mark divides the scale into two sections. From bottom to top, these sections are defined as normal (green) and warning (red). Index mark values are provided by the EDC.
TEMP pointer	This triangular pointer slides up and down the vertical TEMP scale to indicate existing oil temperature. This value is provided by the EDC. The pointer color is identical to the scale color.
TEMP display	This display is a digital readout of existing oil temperature. This value is the numerical equivalent of the TEMP pointer indication; TEMP display/pointer colors are identical.
Oil display key	Press the OIL DSPL key to alternately select and deselect the oil gauge display. Both PRES and TEMP gauges are controlled by this key. Engine oil pressure and temperature are monitored even when the gauges are not displayed. If either value leaves the normal range, both gauges are automatically displayed and cannot be deselected until all oil parameters are in the normal range.
Fuel flow display line	The fuel flow display line digitally indicates left and right engine rate of fuel consumption. FUEL FLOW is displayed in pounds-per-hour. Fuel flow values are provided by the EDC, and are displayed in green. This entire line is displayed on the bottom of the page when the oil gauge display is deselected.

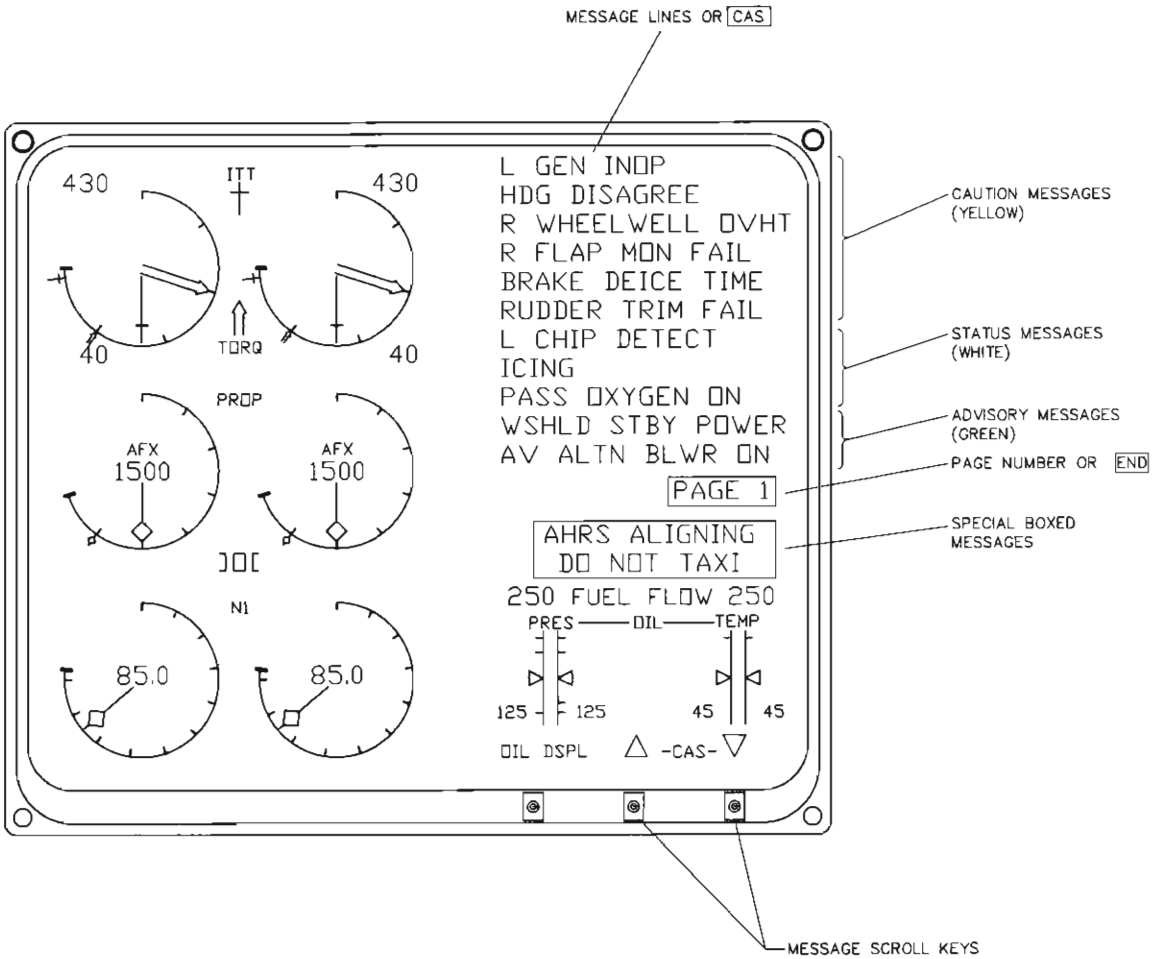

ECD-870 Engine/Caution Display, Controls and Displays
Figure 3-7 (Sheet 6 of 6)

Table 3-7. ECD-870 Engine/Caution Display, Controls and Displays (Cont).

CONTROL OR DISPLAY	FUNCTION/DESCRIPTION
Message lines	The CAS message lines display existing caution, status, and advisory alerts. Caution messages are displayed first; cautions annunciate faults and are displayed in yellow. Status messages are displayed next; these annunciate conditions of interest and are displayed in white. Advisory messages are displayed last; advisories annunciate completion of a selected task and are displayed in green. The most current message of each type is always displayed first in its section. Yellow caution messages indicate a fault which requires immediate crew awareness and possible action. When a caution message is displayed, the aircraft master caution annunciator flashes until it is reset (caution acknowledged). White status messages indicate existing conditions which may or may not be abnormal. These messages simply provide information, and do not require immediate crew action. Green advisory messages confirm the completion of a crew initiated operation. No action is required. If input data (from either EDC or from the DAU) is invalid or missing, the message area is blanked, and a boxed CAS is displayed. CAS stands for crew alerting system. When conditions causing a message to be displayed no longer exist (and minimum annunciation time is met), the message is automatically removed. The entire message list then repacks. A minimum annunciation time prevents nuisance flicker. Special messages are displayed in boxes. If the ECD is overheating, DISPLAY TEMP flashes for 10 seconds and then becomes steady. While the AHC is aligning, AHRS ALIGNING DO NOT TAXI (or AHRS ALIGNING) flashes. When more messages exist than can fit into the display area, the message list is divided into pages. A PAGE number annunciates in a box at the bottom of the message area. On the last message page, END annunciates in this box.
Message scroll keys	Press the up/down message scroll key to display the previous/next page of CAS messages. These keys are active only when more than one message page exists.

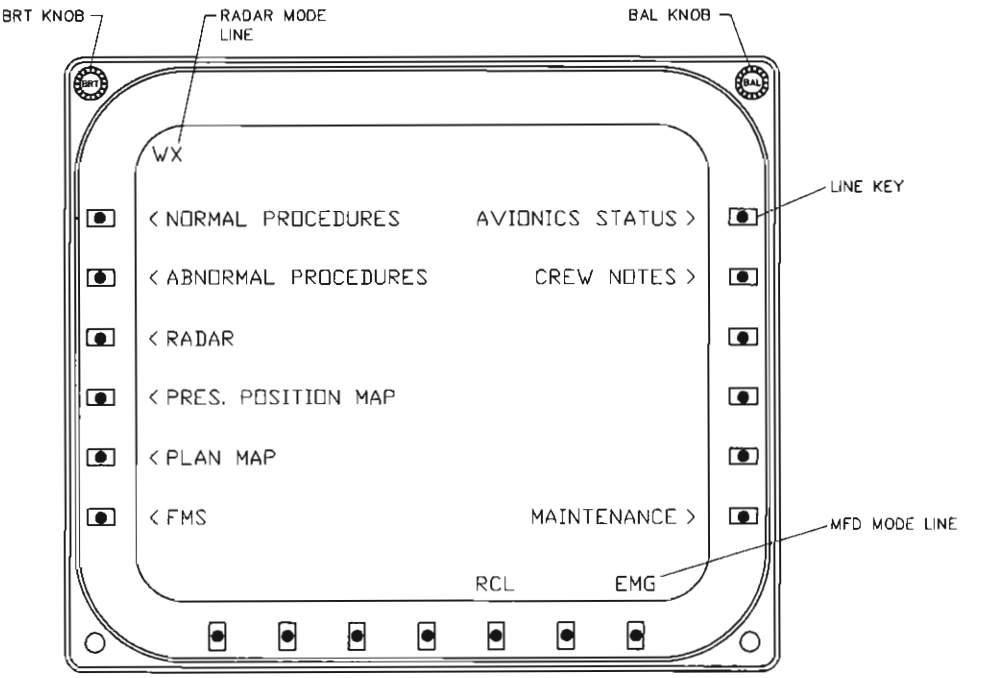

INDEX PAGE

THE FOLLOWING FAULT MESSAGES MAY BE DISPLAYED ON THE MFD

DISPLAY TEMP	THE MFD IS OVERHEATING.
MAP	FMS MAP DATA IS INVALID.
MAP CTL FAULT	A WXR/MAP RANGE DISCREPANCY EXISTS.
MAP INCOMPLETE	MORE MAP SYMBOLS EXIST THAN CAN BE DISPLAYED.
MAP RANGE DISAGREES	THE FMS MAP RANGE IS NOT WHAT THE MFD EXPECTED.
NO DATA AVAILABLE	MAP DISPLAY DATA IS NOT AVAILABLE FROM THE FMS.
RDR CTL FAULT	WXR CONTROL WORDS FROM THE CDU ARE INVALID.
RDR FAIL	THE RTA HAS DETECTED AN INTERNAL FAULT.

CGO-0223-04-AC-0

MFD-870 Multifunction Display, Controls and Displays
Figure 3-8 (Sheet 1 of 4)

Table 3-8. MFD-870 Multifunction Display, Controls and Displays.

CONTROL OR DISPLAY	FUNCTION/DESCRIPTION
BRT knob	Rotate this knob to adjust display brightness.
BAL knob	Rotate this knob to adjust display balance.
Index page	This page is the top level MFD menu. The index page is displayed whenever the IDX line key is pressed. Press a labeled line key to access the associated page or display.
Radar mode line	This line displays the operating mode of the RTA. TGT status (target or turbulence alert) is also displayed if active. Note that additional radar parameters are displayed on this line when the RADAR line key is pressed.
MFD mode line	This line labels the bottom row of MFD line keys according to available functions. RCL and EMG line keys are available on the index page. Possible MFD bottom line key labels are IDX, up and down range arrows, MNU, RCL, SKP, CLR, DSPL, ENT, and EMG. These line keys are briefly described below, and referenced throughout this table as applicable. Press IDX to display the index page. Press a range (up/down arrow) key to change the display range of a map or radar screen, or to scroll page data. Press MNU to display the previous menu. Press RCL to recall the previously used checklist (if not currently in a checklist format) or to find the first unchecked item in the present checklist. Press SKP or CLR to skip or clear lines of page data. Press DSPL to display selected maps. Press ENT to enter joystick position coordinates from a map display to the FMS. Press EMG to display the emergency checklist menu.
NORMAL PROCEDURES line key	Press this line key to display the normal procedure checklist page. A menu shows the available normal procedure checklists.
ABNORMAL PROCEDURES line key	Press this line key to display the abnormal procedure checklist page. A menu shows the available abnormal procedure checklists.
RADAR line key	Press this line key to show the radar display. This screen is a dynamic, heading-up pictorial. Navigation, map, and joystick functions are not available on this screen.
PRES. POSITION MAP line key	Press this line key to display the present position map. A menu page shows the navaids available for display on the map; after navaids are selected, the map may be displayed. The present position map is a dynamic heading-up map, referenced to the aircraft present position.
PLAN MAP line key	Press this line key to display the plan map. A menu page shows the navaids available for display on the map; after navaids are selected, the map may be displayed. The plan map is a static true-north-up map, centered at the waypoint listed on the middle of the controlling CDU flight plan or route page.
FMS line key	Press this line key to display the FMS page. A menu shows FMS parameters which may be monitored. These include FMS performance, progress, route list, VOR/DME status, VLF/OMEGA status, and position summary.
AVIONICS STATUS line key	Press this line key to display the AVIONICS STATUS page. This page lists nonfunctioning avionics units.
CREW NOTES line key	Press this line key to display the CREW NOTES page. This page displays user defined text.

Table 3-8. MFD-870 Multifunction Display, Controls and Displays (Cont).

CONTROL OR DISPLAY	FUNCTION/DESCRIPTION
MAINTENANCE line key	Press this line key to display the MAINTENANCE page. A menu shows maintenance parameters available for display. These include LRU diagnostic data, LRU fault history, engine exceedances, and FCS diagnostics.
Normal procedure checklist page	A normal procedure menu is displayed when the NORMAL PROCEDURES line key is pressed. This menu shows checklists available for display. Press the adjacent line key to display that checklist. A checklist is displayed in three colors. Unchecked lines are cyan, the cursor line is magenta, and checked lines are green. Active controls are the bottom row of MFD line keys, the yoke page advance/line advance switches, and the CHP joystick. MFD mode line labels are IDX, up arrow, down arrow, SKP, RCL, CLR, and EMG. Press the IDX line key to display the index page. Press the up arrow line key to uncheck the cursor line, and scroll up one line. Press the down arrow line key to check the cursor line, and scroll down one line. Press the SKP line key to scroll down one line, without checking the old cursor line. Press the RCL line key to display the first unchecked line in the list as the cursor line. Press the CLR line key to uncheck every line in the list. Press the EMG line key to display the emergency menu page. Yoke mounted line advance and page advance buttons may be used with checklist pages. Press the line advance button to check the cursor line, and scroll down 1 line. Press the page advance button to exit the checklist, and select the next checklist on the normal procedure menu. The CHP joystick may be used with checklist pages. Move the joystick down to display the next checklist page. Move the joystick up to display the previous checklist page. Move the joystick right to exit the checklist, and select the next checklist on the normal procedure menu. Move the joystick left to exit the checklist, and select the previous checklist on the normal procedure menu.
Abnormal procedure checklist page	An abnormal procedure menu is displayed when the ABNORMAL PROCEDURES line key is pressed. This menu shows checklists available for display. Operation is as described above for normal procedure checklists.
FMS page	An FMS menu is displayed when the FMS line key is pressed. This menu shows FMS parameters available for display. Press the adjacent line key to display these parameters. PERFORMANCE dynamically displays the following flight parameters: TTG, ETA, GS, TAS, HDG, BRG, DIST, WIND, DTK, TK, XTK, and DA. PROGRESS dynamically displays the following flight progress (between waypoint) parameters: DIST, ETE, ETA, and FUEL management data. ROUTE LIST dynamically displays stored FMS routes by route number and name identifier. VOR/DME STATUS dynamically displays the following VOR/DME sensor parameters: type of sensor, data base ident, received frequency, and received data (VOR bearing or DME distance). VLF/OMEGA STATUS dynamically displays the following VLF/OMEGA sensor parameters: present position, position uncertainty, NAV mode, and the current use status of the VLF and OMEGA sensors.

Table 3-8. MFD-870 Multifunction Display, Controls and Displays (Cont).

CONTROL OR DISPLAY	FUNCTION/DESCRIPTION
	POSITION SUMMARY dynamically displays the following aircraft position data: present position coordinates, the sensors used to compute position difference (between FMS present position value and a position computed using received VOR/DME or VLF/ OMEGA sensor data). MFD mode line labels available on this page are IDX, RCL, and EMG.
AVIONICS STATUS page	An AVIONICS STATUS page is displayed when the AVIONICS STATUS line key is pressed. This page provides a dynamic list of nonfunctioning avionics LRUs. Each line lists the LRU name, the failure condition, and a fault code number. Fault codes are described in the maintenance section of this publication. MFD mode line labels available on this page are IDX, RCL, and EMG.
CREW NOTES page	A CREW NOTES page is displayed when the CREW NOTES line key is pressed. This page displays customer defined text (lists, notes, etc). Text is entered into FMS memory using the DBU disk drive. MFD mode line labels available on this page are IDX, RCL, and EMG.
MAINTENANCE page	A MAINTENANCE menu page is displayed when the MAINTENANCE line key is pressed. This menu shows LRU diagnostic data, LRU fault history, engine exceedances, and FCS diagnostics data. This page is used for flight-line troubleshooting, and is described in detail in the maintenance section of this publication. MFD mode line labels available on this page are IDX, RCL, and EMG.

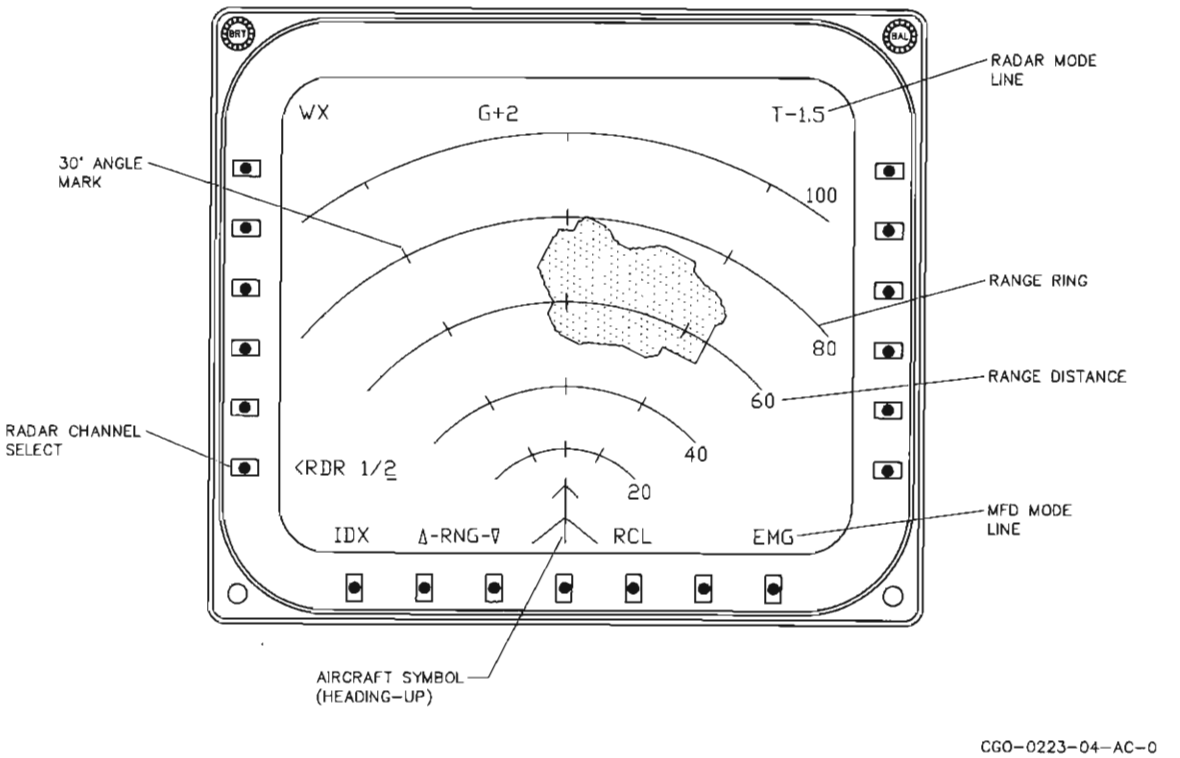

MFD-870 Multifunction Display, Controls and Displays
Figure 3-8 (Sheet 2 of 4)

Table 3-8. MFD-870 Multifunction Display, Controls and Displays (Cont).

CONTROL OR DISPLAY	FUNCTION/DESCRIPTION
Radar display	The radar display is shown when the RADAR line key (on the index page) is pressed. This display shows precipitation/turbulence/ground targets detected by the RTA. The display presents a forward-view ±60 degrees of the aircraft heading. The display updates with every sweep of the antenna. Note that this is a radar-only display; aircraft heading, map background data, and the CHP joystick functions are not available.
Radar channel select	Press this line key to alternately cause the MFD to display channel 1 (left) or channel 2 (right) radar sweep data. The selected channel is displayed in green and underlined, the other channel is white. This function is available only when the RTA is in SPLIT channel mode (selected on RDR CONTROL page of CDU). In SYNC mode, the MFD and both NDs display channel 1 or channel 2 data.
Aircraft symbol	This stationary symbol provides a reference point, used to estimate the relative position of weather targets with respect to the aircraft.
Range ring	Five range rings provide a distance measuring scale. These rings indicate distance from the aircraft.
Range distance	A numeric distance label is displayed by each range ring. Note that the display range (and distance labels) are changed by the range arrow line keys.
30° angle mark	Three angle marks are displayed on each range ring. These marks provide a directional scale relative to aircraft heading. The center mark indicates dead-ahead. The other two angle marks indicate 30 degrees left and right of aircraft heading.
Radar mode line	This line displays the RTA operating mode and selected radar parameters. Parameters which may be displayed on (or just below) this line include: mode, ground clutter suppression (GCS), HOLD annunciation, stabilization deselected (USTB), target or turbulence alert (TGT) annunciation, radar gain (G value), and radar tilt (T value).
MFD mode line	This line labels the bottom row of MFD line keys. Available keys on this page are IDX, up and down range arrows, RCL, and EMG. Press the IDX line key to display the index page. Press the up arrow key to increase the display range. Press the down arrow to decrease the display range. Press the RCL line key to recall and display the last used checklist. Press the EMG line key to display the emergency menu page. The up and down range arrows are not displayed on the MFD when the radar information is also displayed on either of the ND's. Use the RANGE knob on the controlling CDU to select the display range.

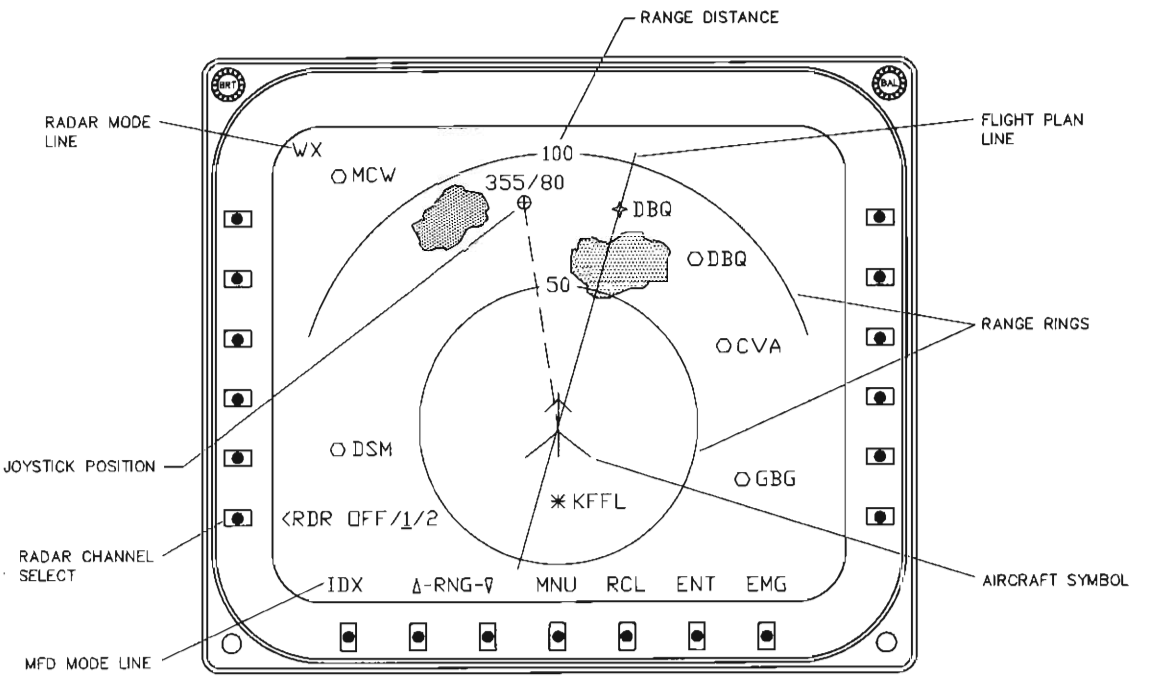

MAP SYMBOLS:

- ○ VOR
- ✳ AIRPORT
- ▽ TACAN OR DME
- VOR/DME OR VORTAC
- ⊕ JOYSTICK
- ✧ FLIGHT PLAN WAYPOINT
- ⊠ USER DEFINED WAYPOINT
- ⁄⁄ RUNWAY (DISPLAYED WITH LOC LINE)
- ◎ NDB
- Δ INTERSECTION

CGO-0223-04-AC-0

MFD-870 Multifunction Display, Controls and Displays
Figure 3-8 (Sheet 3 of 4)

Table 3-8. MFD-870 Multifunction Display, Controls and Displays (Cont).

CONTROL OR DISPLAY	FUNCTION/DESCRIPTION
Present position map	A present position map menu is displayed when the PRES. POSITION MAP line key (on the index page) is pressed. This menu shows navaids which may be selected or deselected for display on the present position map, and provides a radar control line key. Press the MFD right side line keys to select (or deselect) the navaids to be displayed. Available navaids are HIGH LEVEL VORS, LOW LEVEL VORS, INTERSECTIONS, NDBS, AIRPORTS, and TERMINAL WAYPOINTS. Selected items are displayed in green and underlined, other items are white. Press the RDR OFF/1/2 line key to turn off the radar display, to display channel 1 (left) sweep data, or to display channel 2 (right) sweep data. When the RTA is in SYNC mode, this line label becomes RDR ON/OFF. The radar selection is displayed in green and underlined. After NAV data and radar status are selected, press the left DISPLAY line key or the bottom DSPL line key to display the present position map.

Table 3-8. MFD-870 Multifunction Display, Controls and Displays (Cont).

CONTROL OR DISPLAY	FUNCTION/DESCRIPTION
	The present position map is a dynamic geographic pictorial of the flight as it occurs. The map display is centered on the aircraft present position, with current heading toward the top of the screen. The screen shows a moving map display relative to aircraft present position. The map display shows selected navaids within range, radar (if selected), and flight plan waypoints.
Radar mode line	This line displays the RTA operating mode and selected radar parameters.
Aircraft symbol	This symbol is a reference used to visualize aircraft position relative to the geographic map and weather targets. The aircraft symbol is stationary and always displayed in the center of the screen. The navaid symbols, weather targets, and flight plan lines move on the screen as the flight progresses.
Range rings	Two range rings provide a distance measuring scale. These rings indicate distance from the aircraft.
Range distance	A numeric distance label is displayed by each range ring. Note that the display range (and distance labels) are changed by the range arrow line keys or the CDU RANGE knob.
Flight plan line	The FMS flight plan is displayed on the map as a white line. This line consists of straight line segments connecting consecutive flight plan waypoints. The TO waypoint is displayed in magenta.
Joystick position	The CHP joystick is active when the present position map is displayed. A circled cross-hair symbol is displayed when the joystick is moved from detent. A dashed line shows movement from the aircraft symbol. Screen offset coordinates are displayed by the joystick symbol; these are converted to geographic coordinates and supplied to the FMS when the ENT line key is pressed.
Radar channel select	Press this line key to alternately cause the MFD to display channel 1 (left), channel 2 (right), or no (OFF) radar sweep data. The selected option is displayed in green and underlined, others are white. Three selections are available only when the RTA is in SPLIT channel mode (selected on RDR CONTROL page of CDU). In SYNC mode, display options are OFF or ON.
MFD mode line	This line labels the bottom row of MFD line keys. Available keys on this page are IDX, up and down range arrows, MNU, RCL, ENT, and EMG. Press the IDX line key to display the index page. Press the up arrow key to increase the display range. Press the down arrow to decrease the display range. Press the MNU line key to display the present position map menu. Press the RCL line key to recall and display the last used checklist. Press the ENT (displayed only after the joystick is moved) to enter joystick position into the FMS data base. Press the EMG line key to display the emergency menu page. The up and down range arrows are not displayed on the MFD when the radar information is also displayed on either of the NDs. Use the RANGE knob on the controlling CDU to select the display range.

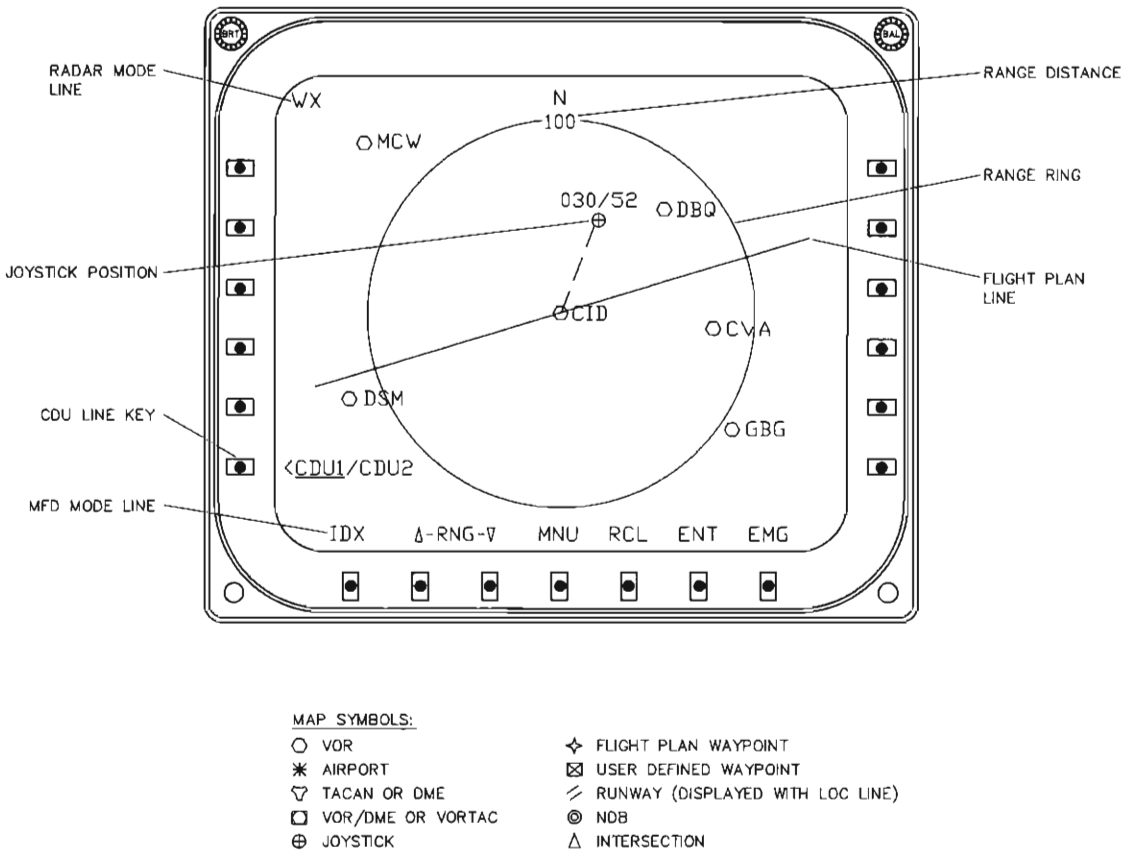

CGO-0223-04-AC-0

MFD-870 Multifunction Display, Controls and Displays
Figure 3-8 (Sheet 4 of 4)

Table 3-8. MFD-870 Multifunction Display, Controls and Displays (Cont).

CONTROL OR DISPLAY	FUNCTION/DESCRIPTION
Plan map	A plan map menu is displayed when the PLAN MAP line key (on the index page) is pressed. This menu shows navaids which may be selected or deselected for display on the plan map. Press the MFD right side line keys to select (or deselect) the navaids to be displayed. Available navaids are HIGH LEVEL VORS, LOW LEVEL VORS, INTERSECTIONS, NDBS, AIRPORTS, and TERMINAL WAYPOINTS. Selected items are displayed in green and underlined, other items are white. After the navaids are selected, press the left DISPLAY line key or the bottom DSPL line key to display the plan map. The plan map is a static geographic pictorial of a current section of the flight plan. This display provides a convenient way to plan and map a deviation from the flight plan. The center of the map depends on what is currently being displayed on the controlling CDU. When the flight plan page is displayed, the map is centered at the middle waypoint on the CDU page. The map is always presented with true-north at the top of the screen. This display shows the selected navaids within range and the flight plan waypoints.
Radar mode line	This line displays the operating mode of the RTA.
CDU line key	Press the CDU line key to select which CDU may be used to control the plan map. The selected CDU is displayed in green and underlined.
Range ring	A range ring provides a distance measuring scale. This ring indicates distance from the center waypoint.
Range distance	A numeric distance label is displayed by the range ring. Note that the display range is changed by the range arrow line keys or the CDU RANGE knob.
Flight plan line	The FMS flight plan is displayed on the map as a white line. This line consists of straight line segments connecting consecutive flight plan waypoints.
Joystick position	The CHP joystick is active when the plan map is displayed. A circled cross-hair symbol is displayed when the joystick is moved from detent. A dashed line shows movement from the center symbol. Offset coordinates (referenced to magnetic north) are displayed by the joystick symbol; these are converted to geographic coordinates and supplied to the FMS when the ENT line key is pressed.
MFD mode line	This line labels the bottom row of MFD line keys. Available keys on this page are IDX, up and down range arrows, MNU, RCL, ENT, and EMG. Press the IDX line key to display the index page. Press the up arrow key to increase the display range. Press the down arrow to decrease the display range. Press the MNU line key to display the plan map menu. Press the RCL line key to recall and display the last used checklist. Press the ENT (displayed only after the joystick is moved) to enter joystick position into the FMS data base. Press the EMG line key to display the emergency menu page. The up and down range arrows are not displayed on the MFD when the radar information is also displayed on either of the ND's. Use the RANGE knob on the controlling CDU to select the display range.

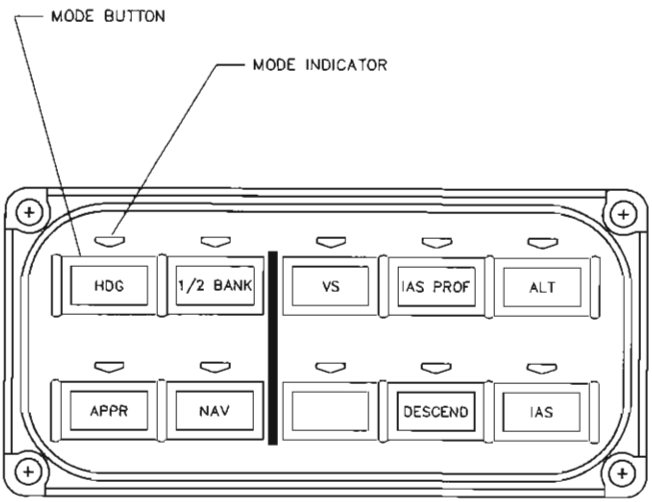

CGO-0226-01-AC-0

MSP-850A Mode Select Panel, Controls and Displays
Figure 3-9

Table 3-9. MSP-850A Mode Select Panel, Controls and Displays.

CONTROL OR DISPLAY	FUNCTION/DESCRIPTION
Mode button	Nine pushbuttons select the flight control system operating modes. Each button is a push on/push off control. A raised divider separates the lateral and vertical modes. Lateral modes are roll, HDG, 1/2 BANK, APPR, and NAV. Vertical modes are pitch, VS, IAS PROF, ALT, DESCEND, IAS, and altitude preselect. Press a mode button once to select that mode and automatically clear any existing incompatible modes. Note that roll, pitch, and altitude preselect modes are not directly selected by an MSP pushbutton; operation is described below.
Mode indicator	A discrete mode indicator lamp is located directly above each mode button. When a mode button is pressed, a request for that mode is supplied to the on-side FCC. If the FCC determines that conditions are acceptable for that mode, an acknowledgement is returned to the MSP which lights the mode indicator. The selected mode also annunciates on the upper-left of the on-side PFD.
Roll mode	Roll mode is the basic lateral operating mode, and occurs automatically on the coupled side or when a vertical mode is selected and no other lateral mode is active. ROLL annunciates on the PFD. If roll attitude is more that 5 degrees from level when the autopilot is engaged, commands are generated to maintain that roll attitude. If roll attitude is less than 5 degrees, commands are generated to maintain the existing heading angle. The roll (or heading) angle may be changed by the APP turn knob.
HDG mode	Press the HDG button to alternately select or deselect heading mode. HDG annunciates on the PFD. Commands are generated to capture and maintain the selected heading, indicated by the heading bug display on the ND. The selected heading may be changed by the HDG knob on the CHP.
1/2 BANK mode	Press the 1/2 BANK button to alternately select or deselect half-bank mode. 1/2 BNK annunciates on the PFD. This mode reduces the maximum bank angle command to half the normal value.
APPR mode	Press the APPR button to alternately select or deselect approach mode. The type of approach is determined by the active navigation source (selected on NAV SOURCE page of the CDU), and annunciated on the PFD (FMS, VOR1, LOC2, etc). APPR mode arms when the button is pressed, and automatically captures when capture conditions are met. Prior to capture, the system operates in the currently active lateral mode. In an FMS approach, the capture point is determined by the FMC-851A. After capture, the FMC-851A generates and applies lateral bank commands to the FCC. In a non-FMS approach, the FCC arms for glideslope capture (if GS is valid) after localizer capture (front course approach only). GS annunciates on the PFD. At glideslope capture, commands are generated to maintain flight on the glidepath.
NAV mode	Press the NAV button to alternately select or deselect navigation mode. The FCC generates lateral commands to fly the active navigation signal (selected on NAV SOURCE page of the CDU). The active NAV source is displayed on the PFD (FMS, VOR1, LOC2, etc). NAV mode arms when the button is pressed, and automatically captures when capture conditions are met. Prior to capture, the system operates in the currently active lateral mode. If FMS is the active NAV source, the capture point is determined by the FMC-851A. After capture, the FMC-851A generates and applies lateral bank commands to the FCC.

Table 3-9. MSP-850A Mode Select Panel, Controls and Displays (Cont).

CONTROL OR DISPLAY	FUNCTION/DESCRIPTION
	If FMS is not the active NAV source, the FCC performs an all-angle adaptive capture. After capture, commands are generated to maintain the VOR course or localizer beam.
Pitch mode	Pitch mode is the basic vertical operating mode, and occurs automatically when no other vertical mode is active. PTCH annunciates on the PFD. Commands are generated to maintain the current pitch angle. When the autopilot is engaged, the pitch angle reference may be changed by the APP pitch wheel.
VS mode	Press the VS button to alternately select or deselect vertical speed mode. VS annunciates on the PFD; FD annunciates on the ALI. Commands are generated to maintain the vertical speed existing at the time of selection.
	In VS mode, the VS bug on the ALI automatically displays and syncs to the current vertical speed. This VS reference may be changed by the ALI bug control knob.
IAS PROF mode	Press the IAS PROF button to alternately select or deselect IAS profile mode. IASP annunciates on the PFD; FD annunciates on the ASI. Commands are generated to maintain a customized preprogrammed IAS profile.
	In IAS PROF mode, the IAS bug on the ASI automatically displays and syncs to the current indicated air speed. As altitude changes, the IAS reference (bug value) is automatically compensated -2 knots per 1000 feet of altitude increase (or +2 knots per 1000 feet of altitude decrease). The IAS reference cannot be commanded to automatically decrease below 1.3 V_S. The IAS reference may be changed by the ASI bug control knob.
ALT mode	Press the ALT button to alternately select or deselect altitude hold mode. ALT annunciates on the PFD. Commands are generated to maintain the pressure altitude existing at the time of selection. Altitude hold mode automatically selects if the preselect altitude setting (on ALI) is changed while in altitude preselect track.
DESCEND mode	Press the DESCEND button to alternately select or deselect descend mode. DES annunciates on the PFD. Commands are generated to fly either an IAS or a VS descent profile.
	If aircraft altitude is above 5000 feet when DESCEND mode is selected, an IAS descent results. FD annunciates on the ASI. The IAS bug on the ASI automatically displays and syncs to an indicated air speed of the current V_{MO} - 25 knots. Commands are generated to maintain this IAS reference value or 100 FPM, whichever descent rate is greater. The IAS reference may be changed with the ASI bug control knob.
	If aircraft altitude is below 5000 feet when DESCEND mode is selected, a VS descent results. FD annunciates on the ALI. The VS bug on the ALI automatically displays and syncs to a descent rate of 1000 FPM. This VS reference may be changed by the ALI bug control knob.
IAS mode	Press the IAS button to alternately select or deselect IAS hold mode. IAS annunciates on the PFD; FD annunciates on the ASI. Commands are generated to maintain the IAS existing at the time of selection.
	In IAS mode, the IAS bug on the ASI automatically displays and syncs to the current indicated airspeed. This IAS reference may be changed by the ASI bug control knob.
	IAS mode automatically selects if the V_{MO} is significantly exceded (10 knots). The IAS reference is set to the current V_{MO} - 5 knots, to command the aircraft back under the V_{MO}.

Table 3-9. MSP-850A Mode Select Panel, Controls and Displays (Cont).

CONTROL OR DISPLAY	FUNCTION/DESCRIPTION
Altitude preselect mode	Altitude preselect mode is automatically armed when the PFD V-bars come into view, except in go around mode (arms when vertical go around is cleared). Preselect mode also arms when the ALT SEL knob on the ALI is rotated, if the V-bars are already in view and the system is not in glideslope capture or go around modes. ALTS annunciates in white on the PFD. Altitude preselect capture occurs when the aircraft altitude nears the preselect altitude (displayed on the ALI). The capture point is a function of closure rate. ALTS CAPT annunciates in green on the PFD. If the ALT SEL knob is rotated while the preselect is armed, altitude preselect mode rearms and pitch mode results. If ALTS CAPT has been annunciated and is cleared without going to arm or track mode (pitch wheel turned or ALT SEL knob rotated), ALTS annunciates in amber to indicate altitude abort. Altitude preselect track occurs after the aircraft becomes established at the preselected altitude. ALTS annunciates in green on the PFD. If the ALT SEL knob is rotated during track, altitude preselect mode rearms and altitude hold mode results.

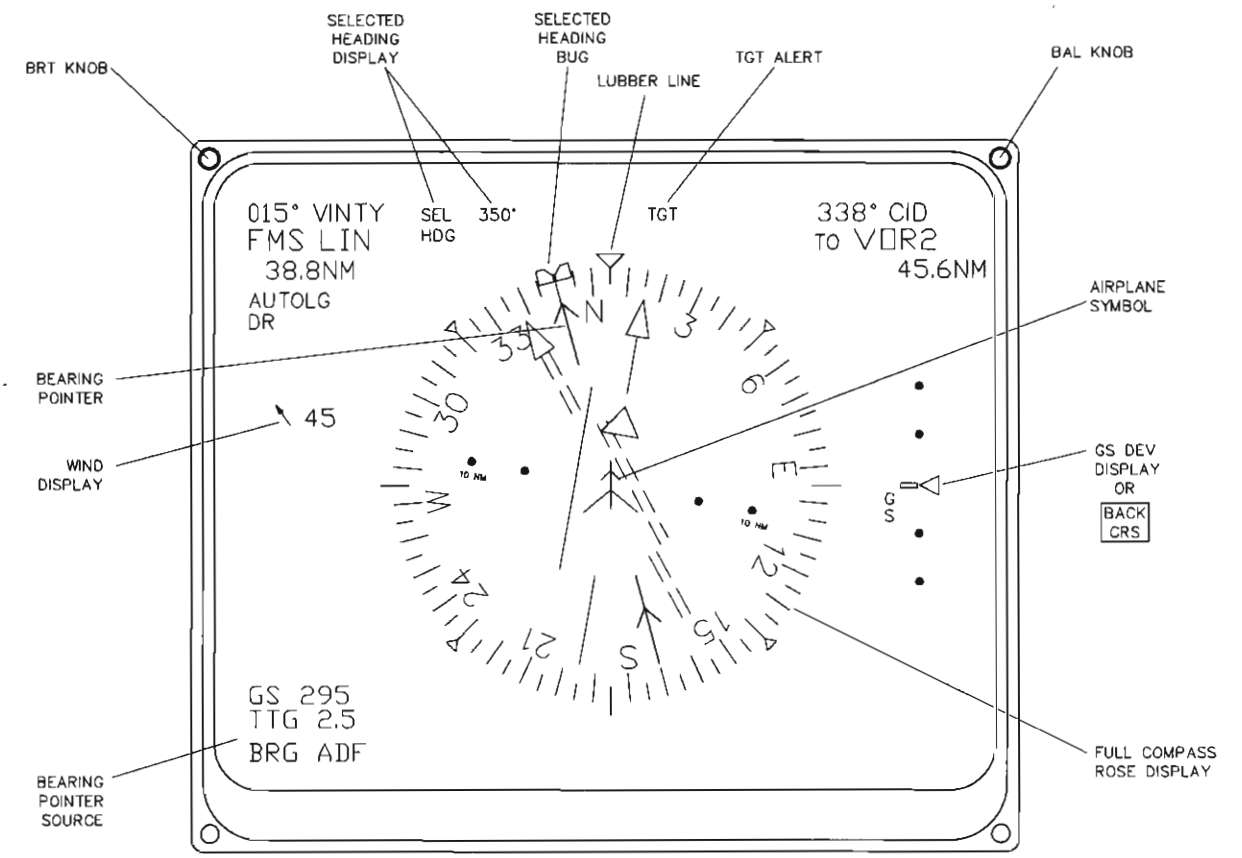

HSI FORMAT

THE FOLLOWING FAULT/REVERSION MESSAGES ARE DISPLAYED ON THE ND:

DISPLAY TEMP	THE ND IS OVERHEATING.
CDU	CDU FAILURE DETECTED.
HDG	HEADING FAILURE DETECTED.
XCDU	CDU X-SIDE REVERSION MODE IS SELECTED.
XHDG	AHRS X-SIDE REVERSION MODE IS SELECTED.
---	DATA IS MISSING OR INVALID.

CGO-0230-08-AC-0

ND-870 Navigation Display, Controls and Displays
Figure 3-10 (Sheet 1 of 8)

Table 3-10. ND-870 Navigation Display, Controls and Displays.

CONTROL OR DISPLAY	FUNCTION/DESCRIPTION
BRT knob	Rotate this knob to adjust display brightness.
BAL knob	Rotate this knob to adjust display balance.
Full compass rose display (HSI format)	A full 360° compass rose is displayed when the HSI format key is pressed on the CDU. Note that radar is not displayed on the ND when HSI format is selected. The compass rose contains index markings every 5°; alphanumeric markings are displayed at 30° intervals. Additional fixed index marks are displayed outside the rose perimeter at 45° intervals with respect to the lubber line. The compass rose rotates to indicate the aircraft magnetic heading (read under the lubber line).
Airplane symbol	A fixed airplane symbol is displayed in the HSI format. This airplane is located in the center of the rose and points toward the lubber line.
Lubber line	The lubber line is a fixed triangle symbol located at the top of the compass rose. The present aircraft heading is the compass reading directly under the lubber line.
Selected heading bug	A heading bug symbol is displayed to indicate a selected heading reference. This symbol rotates around the compass rose when the CHP HDG knob is turned.
Selected heading display	The SEL HDG display numerically indicates the position of the selected heading bug.
Bearing pointer	The bearing pointer is a V-head pointer with a reciprocal tail. This pointer indicates the bearing to a selectable navaid station or waypoint.
Bearing pointer source	This display annunciates the type of navaid source driving the bearing pointer. The bearing pointer source is selected after the BRG page key is pressed on the CDU. An arrow is displayed by the source if bearing data is unavailable, and the bearing pointer cannot be displayed. The source annunciation becomes boxed and flashes if the selected source has failed.
Wind display	A wind vector and speed readout is displayed if the FMS detects a significant amount of wind. The vector is an arrow, which rotates to indicate the wind direction. Wind speed is numerically displayed (in knots) next to the arrow.
GS dev display	The glideslope deviation display automatically appears when LOC is the active NAV source and a localizer frequency is tuned. When making a back course approach, this display is replaced with a BACK CRS annunciation. Deviation above or below the glidepath is indicated by the position of a triangular pointer relative to the deviation scale. The scale consists of a center mark, 2 dots above center, and 2 dots below center. Each dot represents 75 μA of deviation.
TGT alert	TGT annunciates in yellow if a turbulence alert or a target alert is detected by the RTA. The annunciation flashes for 10 seconds and then becomes steady.

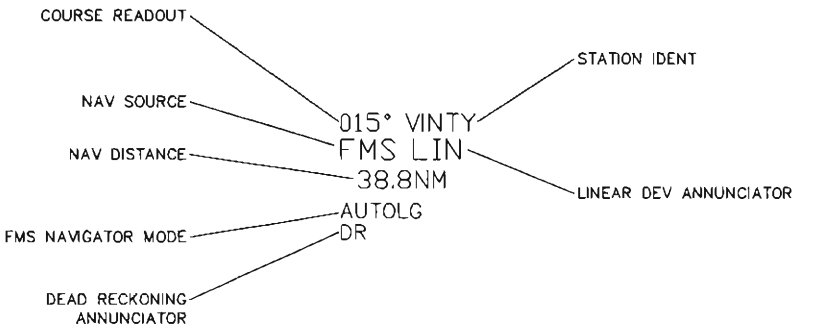

DETAIL OF TYPICAL COURSE DISPLAY

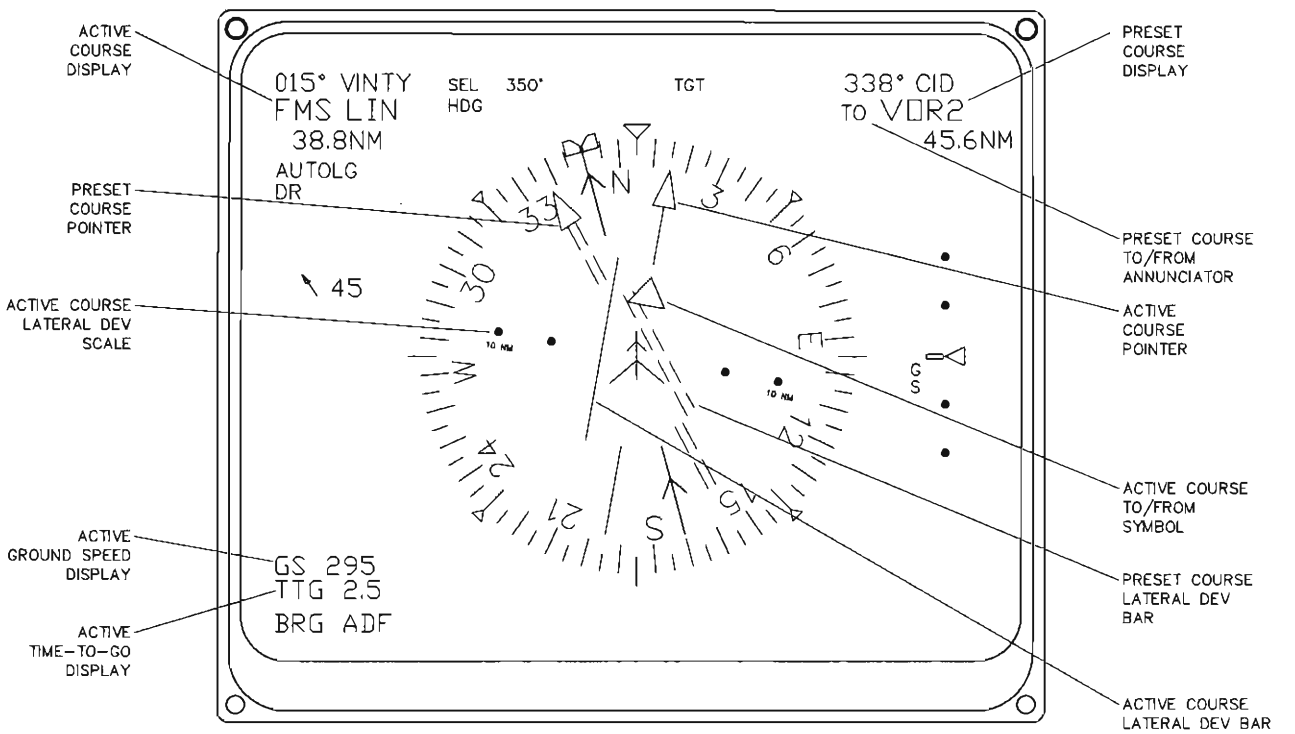

HSI FORMAT

CG0-0230-08-AC-0

ND-870 Navigation Display, Controls and Displays
Figure 3-10 (Sheet 2 of 8)

Table 3-10. ND-870 Navigation Display, Controls and Displays (Cont).

CONTROL OR DISPLAY	FUNCTION/DESCRIPTION
Active course display	The active course display is presented in the upper-left of the ND. This display provides a summary of active NAV course parameters. Refer to the typical course display detail. The course readout numerically shows the active course angle through the selected navaid station or waypoint (also indicated by the active course pointer). The station ident of the selected navaid is displayed by the course readout. Also annunciated are the active NAV source (selected on CDU), LIN (if lateral course deviation is linear), NAV distance to the station (in nautical miles), the FMS navigator mode (AUTOLG, MAN LG, or SELTRK if FMS is the active NAV source), and DR (dead reckoning). Note that the "NM" distance label is replaced with an "H" if VOR is the active NAV source, and the DME is in DME hold mode. The "DR" annunciation is replaced with "VLF" if FMS is the active NAV source, and is in VLF only mode. The NAV source annunciation becomes boxed if the selected source has failed.
Active course pointer	The active course pointer is a solid-line, triangle-head pointer with a reciprocal tail. This pointer indicates the active NAV course angle, and is numerically repeated in the active course display. The active course angle is selected by the on-side CRS knob (or direct-to switch) on the CHP (in VOR, LOC, and FMS SEL TRK modes).
Active course to/from symbol	A wedge-shaped symbol is displayed to annunciate active course to/from direction. This symbol rotates as a part of the active course pointer, and points toward the tuned station.
Active course lateral dev bar	The lateral dev bar is the center portion of the active course pointer. This bar moves left or right from the pointer head and tail to indicate lateral deviation from the active NAV course. The amount of deviation is read against a dev scale. The bar aligns with the head and tail to form a complete pointer when the aircraft is on-course.
Active course lateral dev scale	The active course lateral dev scale consists of four dots which are displayed perpendicular to the lateral dev bar. Two dots are displayed on either side of the airplane symbol. In FMS modes, distance labels are displayed by the outer dots.
Active ground speed display	The active course ground speed (in knots) is displayed in the lower-left of the ND. GS is computed by the selected active NAV source (selected VOR/DME or the FMS computer).
Active time-to-go display	The active time-to-go is displayed in the lower-left of the ND. The display is either in hours and minutes (H:MM) or in minutes and tenths of minutes (MM.T). TTG is computed by the selected active NAV source (selected VOR/DME or the FMS computer).
Preset course display	The preset course display is presented in the upper-right of the ND. This display provides a summary of preset NAV course parameters. Refer to the typical course display detail; the preset course display is similar to the active course display, except for the to/from annunciation.
Preset course pointer	The preset course pointer is a dual dashed-line, triangle-head pointer with a reciprocal tail. This pointer indicates the preset NAV course angle, and is numerically repeated in the preset course display. The preset course angle is selected by the on-side CRS knob (or direct-to switch) on the CHP, only while the PRESET NAV SOURCE page is displayed on the CDU.
Preset course to/from annunciator	Preset course to/from status is annunciated in the preset course display. "TO" or "FR" is displayed next to the preset NAV source to indicate the direction of the tuned station with respect to the aircraft.
Preset course lateral dev bar	The lateral dev bar is the center portion of the preset course pointer. This bar moves left or right from the pointer head and tail to indicate lateral deviation from the preset NAV course.

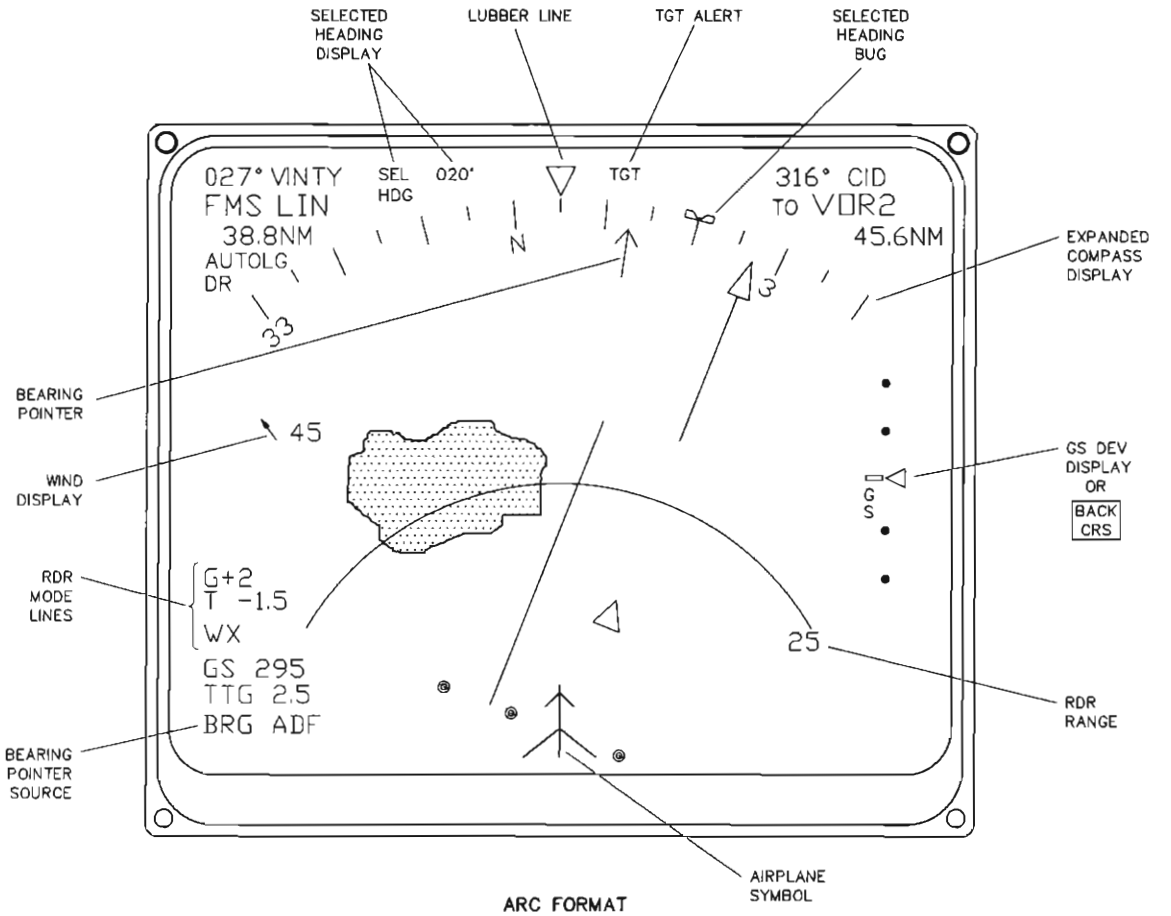

ARC FORMAT

ADDITIONAL FAULT MESSAGES:

RDR CTL FAULT	WXR CONTROL WORDS FROM THE CDU ARE INVALID.
RDR FAIL	RADAR FAILURE DETECTED.

CG0-0230-08-AC-0

ND-870 Navigation Display, Controls and Displays
Figure 3-10 (Sheet 3 of 8)

Table 3-10. ND-870 Navigation Display, Controls and Displays (Cont).

CONTROL OR DISPLAY	FUNCTION/DESCRIPTION
Expanded compass display (ARC format)	An expanded 70° section of the compass rose is displayed when the ARC MAP key is pressed on the CDU. The ARC MAP key alternately selects the ARC and the MAP formats. Note that radar may be selected for display in the ARC format, by pressing the RDR key on the CDU. The compass rose contains index markings every 5°; alphanumeric markings are displayed at 30° intervals. The compass rose rotates to indicate the aircraft magnetic heading (read under the lubber line), even though only a partial section of the rose is displayed. The compass rose is centered around the airplane symbol.
Airplane symbol	A fixed airplane symbol is displayed in the ARC format. This airplane is located in the lower-center of the display and points toward the lubber line. This symbol represents the aircraft present position with respect to displayed radar targets.
Lubber line	The lubber line is a fixed triangle symbol located at the top of the compass rose. The present aircraft heading is the compass reading directly under the lubber line.
Selected heading bug	A heading bug symbol is displayed to indicate a selected heading reference. This symbol rotates around the compass rose when the CHP HDG knob is turned. When the bug is positioned beyond the 70° display range, a dashed line is displayed from the airplane symbol which provides an angular indication of the selected heading value.
Selected heading display	The SEL HDG display numerically indicates the position of the selected heading bug.
Bearing pointer	The bearing pointer is a V-head pointer (or the reciprocal tail). This pointer indicates the bearing to a selectable navaid station or waypoint.
Bearing pointer source	This display annunciates the type of navaid source driving the bearing pointer. The bearing pointer source is selected after the BRG page key is pressed on the CDU. An arrow is displayed by the source if bearing data is unavailable, and the bearing pointer cannot be displayed. The source annunciation becomes boxed and flashes if the selected source has failed.
Wind display	A wind vector and speed readout is displayed if the FMS detects a significant amount of wind. The vector is an arrow, which rotates to indicate the wind direction. Wind speed is numerically displayed (in knots) next to the arrow.
GS dev display	The glideslope deviation display automatically appears when LOC is the active NAV source and a localizer frequency is tuned. When making a back course approach, this display is replaced with a BACK CRS annunciation. Deviation above or below the glidepath is indicated by the position of a triangular pointer relative to the deviation scale. The scale consists of a center mark, two dots above center, and two dots below center. Each dot represents 75 μA of deviation.
TGT alert	TGT annunciates in yellow if a turbulence alert or a target alert is detected by the RTA. The annunciation flashes for 10 seconds and then becomes steady.
RDR mode lines	Radar mode lines annunciate the RTA active mode when weather is selected for display. Selected gain (G value), tilt (T value), stabilization (USTB), and HOLD status may also be displayed.
RDR range	An RDR range arc and numeric distance label appear when weather is selected for display. This arc marks the midpoint of the maximum radar range selected by the CDU RANGE knob.

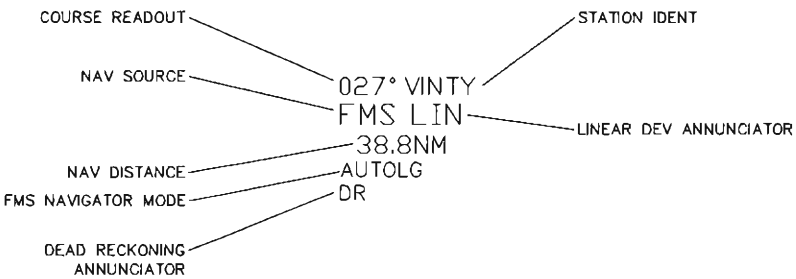

DETAIL OF TYPICAL COURSE DISPLAY

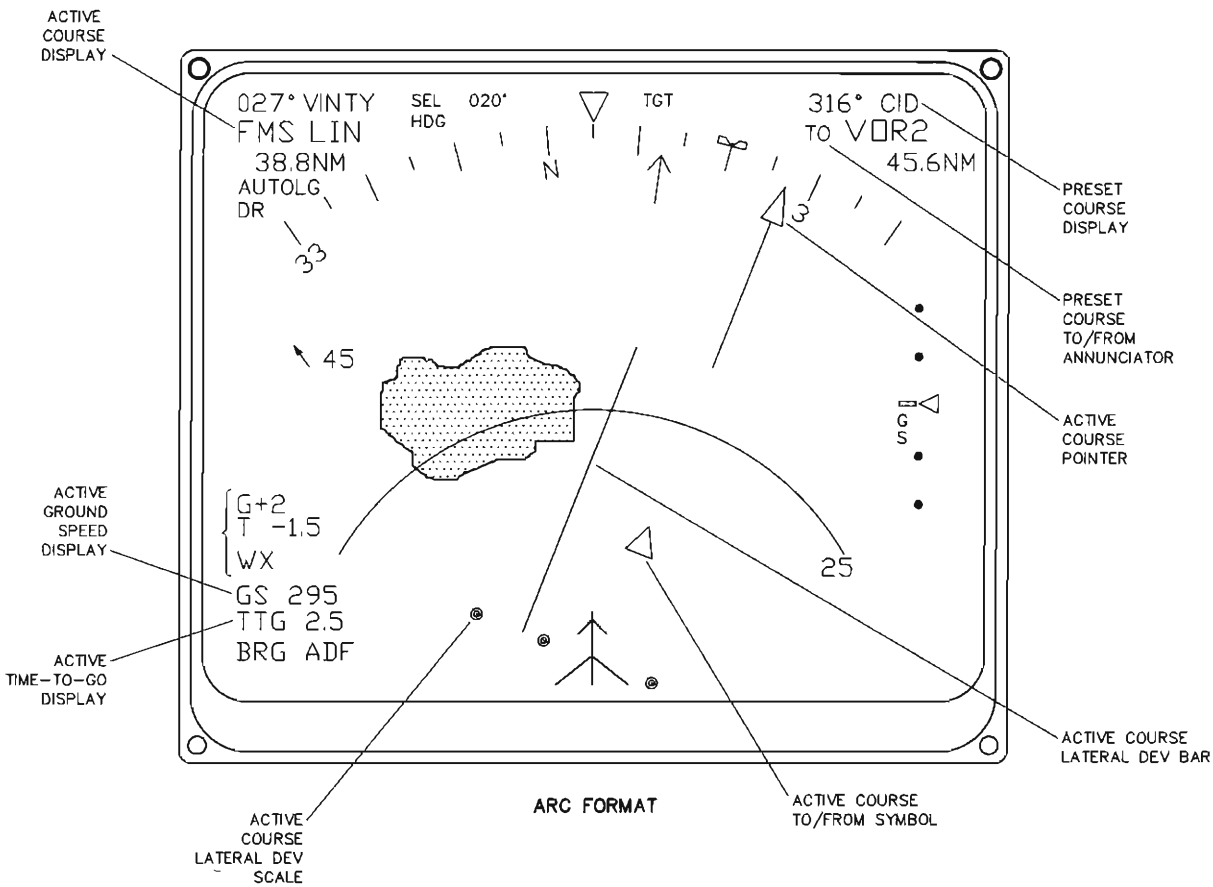

ND-870 Navigation Display, Controls and Displays
Figure 3-10 (Sheet 4 of 8)

Table 3-10. ND-870 Navigation Display, Controls and Displays (Cont).

CONTROL OR DISPLAY	FUNCTION/DESCRIPTION
Active course display	The active course display is presented in the upper-left of the ND. This display provides a summary of active NAV course parameters. Refer to the typical course display detail. The course readout numerically shows the active course angle through the selected navaid station or waypoint (also indicated by the active course pointer). The station ident of the selected navaid is displayed by the course readout. Also annunciated are the active NAV source (selected on CDU), LIN (if lateral course deviation is linear), NAV distance to the station (in nautical miles), the FMS navigator mode (AUTOLG, MAN LG, or SELTRK if FMS is the active NAV source), and DR (dead reckoning). Note that the "NM" distance label is replaced with an "H" if VOR is the active NAV source, and the DME is in DME hold mode. The "DR" annunciation is replaced with "VLF" if FMS is the active NAV source, and is in VLF only mode. The NAV source annunciation becomes boxed if the selected source has failed.
Active course pointer	The active course pointer is a solid-line, triangle-head pointer (or the reciprocal tail). This pointer indicates the active NAV course angle, and is numerically repeated in the active course display. The active course angle is selected by the on-side CRS knob (or direct-to switch) on the CHP (in VOR, LOC, and FMS SEL TRK modes).
Active course to/from symbol	A wedge-shaped symbol is displayed to annunciate active course to/from direction. This symbol rotates as a part of the active course pointer, and points toward the tuned station.
Active course lateral dev bar	The lateral dev bar is the center portion of the active course pointer. This bar moves left or right from the pointer head and tail to indicate lateral deviation from the active NAV course. The amount of deviation is read against a dev scale. The bar aligns with the head and tail when the aircraft is on-course.
Active course lateral dev scale	The active course lateral dev scale consists of four dots which are displayed perpendicular to the lateral dev bar. Two dots are displayed on either side of the airplane symbol. In FMS modes, distance labels are displayed by the outer dots.
Active ground speed display	The active course ground speed (in knots) is displayed in the lower-left of the ND. GS is computed by the selected active NAV source (selected VOR/DME or the FMS computer).
Active time-to-go display	The active time-to-go is displayed in the lower-left of the ND. The display is either in hours and minutes (H:MM) or in minutes and tenths of minutes (MM.T). TTG is computed by the selected active NAV source (selected VOR/DME or the FMS computer).
Preset course display	The preset course display is presented in the upper-right of the ND. This display provides a summary of preset NAV course parameters. Refer to the typical course display detail; the preset course display is similar to the active course display, except for the to/from annunciation. Note that a preset course pointer is not available for display in ARC format.
Preset course to/from annunciator	Preset course to/from status is annunciated in the preset course display. "TO" or "FR" is displayed next to the preset NAV source to indicate the direction of the tuned station with respect to the aircraft.

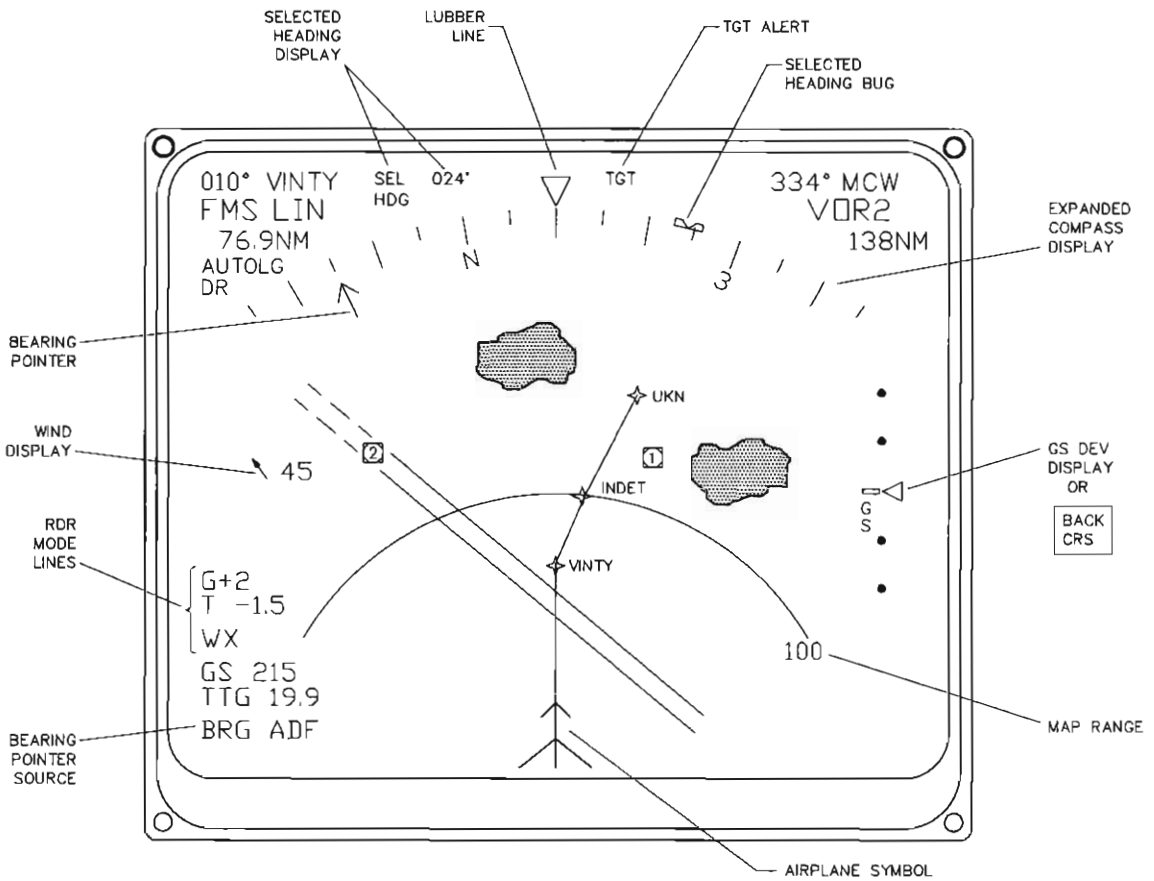

MAP FORMAT

MAP SYMBOLS:

[1] VOR1 STATION

[2] VOR2 STATION

✧ FMS WAYPOINT

ADDITIONAL FAULT MESSAGES:

RDR CTL FAULT	WXR CONTROL WORDS FROM THE CDU ARE INVALID.
RDR FAIL	RADAR FAILURE DETECTED.

CG0-0230-08-AC-0

ND-870 Navigation Display, Controls and Displays
Figure 3-10 (Sheet 5 of 8)

Table 3-10. ND-870 Navigation Display, Controls and Displays (Cont).

CONTROL OR DISPLAY	FUNCTION/DESCRIPTION
Expanded compass display (MAP format)	An expanded 70° section of the compass rose is displayed when the ARC MAP key is pressed on the CDU. The ARC MAP key alternately selects the ARC and the MAP formats. Note that radar may be selected for display in the MAP format, by pressing the RDR key on the CDU. The compass rose contains index markings every 5°; alphanumeric markings are displayed at 30° intervals. The compass rose rotates to indicate the aircraft magnetic heading (read under the lubber line), even though only a partial section of the rose is displayed. The compass rose is centered around the airplane symbol.
Airplane symbol	A fixed airplane symbol is displayed in the MAP format. This airplane is located in the lower-center of the display and points toward the lubber line. This symbol represents the aircraft present position with respect to the displayed NAV map and radar targets.
Lubber line	The lubber line is a fixed triangle symbol located at the top of the compass rose. The present aircraft heading is the compass reading directly under the lubber line.
Selected heading bug	A heading bug symbol is displayed to indicate a selected heading reference. This symbol rotates around the compass rose when the CHP HDG knob is turned. When the bug is positioned beyond the 70° display range, a dashed line is displayed from the airplane symbol which provides an angular indication of the selected heading value.
Selected heading display	The SEL HDG display numerically indicates the position of the selected heading bug.
Bearing pointer	The bearing pointer is a V-head pointer (or the reciprocal tail). This pointer indicates the bearing to a selectable navaid station or waypoint.
Bearing pointer source	This display annunciates the type of navaid source driving the bearing pointer. The bearing pointer source is selected after the BRG page key is pressed on the CDU. An arrow is displayed by the source if bearing data is unavailable, and the bearing pointer cannot be displayed. The source annunciation becomes boxed and flashes if the selected source has failed.
Wind display	A wind vector and speed readout is displayed if the FMS detects a significant amount of wind. The vector is an arrow, which rotates to indicate the wind direction. Wind speed is numerically displayed (in knots) next to the arrow.
GS dev display	The glideslope deviation display automatically appears when LOC is the active NAV source and a localizer frequency is tuned. When making a back course approach, this display is replaced with a BACK CRS annunciation. Deviation above or below the glidepath is indicated by the position of a triangular pointer relative to the deviation scale. The scale consists of a center mark, two dots above center, and two dots below center. Each dot represents 75 μA of deviation.
TGT alert	TGT annunciates in yellow if a turbulence alert or a target alert is detected by the RTA. The annunciation flashes for 10 seconds and then becomes steady.
RDR mode lines	Radar mode lines annunciate the RTA active mode when weather is selected for display. Selected gain (G value), tilt (T value), stabilization (USTB), and HOLD status may also be displayed.
MAP range	A MAP range arc and numeric distance label appear whenever MAP format is selected for display. This arc marks the midpoint of the maximum MAP/RDR range selected by the CDU RANGE knob.

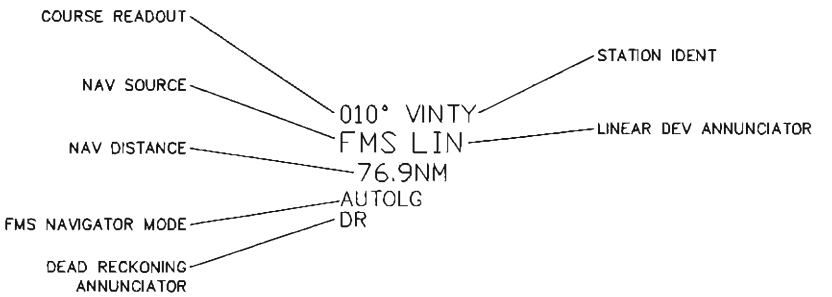

DETAIL OF TYPICAL COURSE DISPLAY

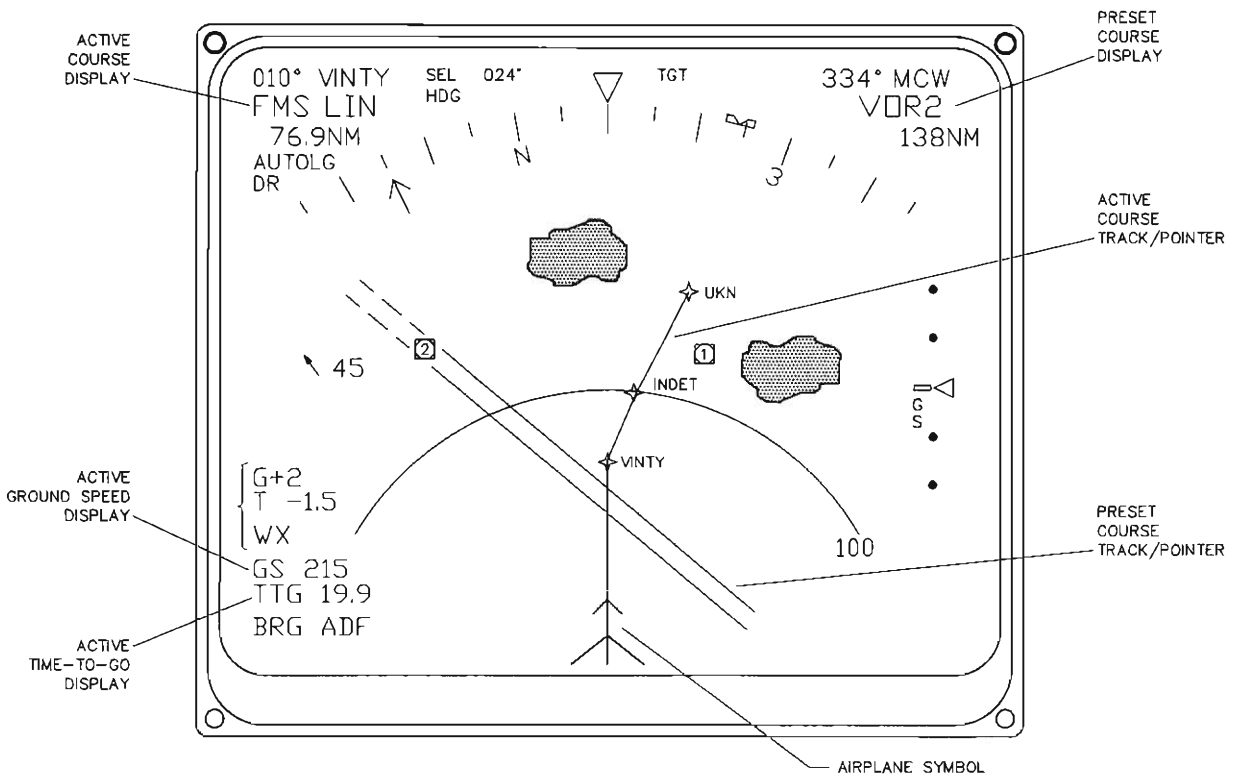

MAP FORMAT

CG0-0230-08-AC-0

ND-870 Navigation Display, Controls and Displays
Figure 3-10 (Sheet 6 of 8)

Table 3-10. ND-870 Navigation Display, Controls and Displays (Cont).

CONTROL OR DISPLAY	FUNCTION/DESCRIPTION
Active course display	The active course display is presented in the upper-left of the ND. This display provides a summary of active NAV course parameters. Refer to the typical course display detail. The course readout numerically shows the active course angle through the selected navaid station or waypoint (also indicated by the active course track/pointer). The station ident of the selected navaid is displayed by the course readout. Also annunciated are the active NAV source (selected on CDU), LIN (if lateral course deviation is linear), NAV distance to the station (in nautical miles), the FMS navigator mode (AUTOLG, MAN LG, or SELTRK if FMS is the active NAV source), and DR (dead reckoning). Note that the "NM" distance label is replaced with an "H" if VOR is the active NAV source, and the DME is in DME hold mode. The "DR" annunciation is replaced with "VLF" if FMS is the active NAV source, and is in VLF only mode. The NAV source annunciation becomes boxed if the selected source has failed.
Active course track/pointer	The active course track/pointer graphically indicates the the active NAV course, and is numerically repeated in the active course display. The active course angle is selected by the on-side CRS knob (or direct-to switch) on the CHP (in VOR, LOC, and FMS SEL TRK modes). If FMS is the active source, the TO waypoint and the next two waypoints in the flight plan (if within range) are displayed. Track lines connect these waypoints. The display updates as the flight progresses, and shows the TO waypoint and the next two waypoints. Waypoint identifiers are displayed by the waypoint symbols. Both VOR station symbols are also displayed, if tuned to valid stations and within the map window. In FMS SEL TRK mode, a single white line extends through the TO waypoint (solid on TO side/dashed on FROM side). The next two waypoints are no longer connected to the TO waypoint. If VOR is the active source, the selected course is a solid and/or dashed single line through the VOR symbol. The line is solid on the TO side of the station, and dashed on the FROM side. If the selected station is beyond the map range, the TO or FROM portion of this line is displayed when the course is within the map window. Station identifiers are not displayed by the VOR symbols. If LOC is the active source, the selected course pointer is a solid, triangle-head pointer (or the reciprocal tail). The center portion of the pointer moves right or left from the pointer head and tail to indicate localizer deviation. Two dots are displayed on either side of the airplane symbol and perpendicular to the dev bar, to provide a LOC deviation scale.
Active ground speed display	The active course ground speed (in knots) is displayed in the lower-left of the ND. GS is computed by the selected active NAV source (selected VOR/DME or the FMS computer).
Active time-to-go display	The active time-to-go is displayed in the lower-left of the ND. The display is either in hours and minutes (H:MM) or in minutes and tenths of minutes (MM.T). TTG is computed by the selected active NAV source (selected VOR/DME or the FMS computer).
Preset course display	The preset course display is presented in the upper-right of the ND. This display provides a summary of preset NAV course parameters. Refer to the typical course display detail; the preset course display is similar to the active course display.
Preset course track/pointer	The preset course track/pointer graphically indicates the the preset NAV course, and is numerically repeated in the preset course display. The preset course angle is selected by the on-side CRS knob (or direct-to switch) on the CHP (in VOR, LOC, and FMS SEL TRK modes). Operation is as described for the active course, except the symbology is displayed in cyan and a VOR course is displayed as a dual line.

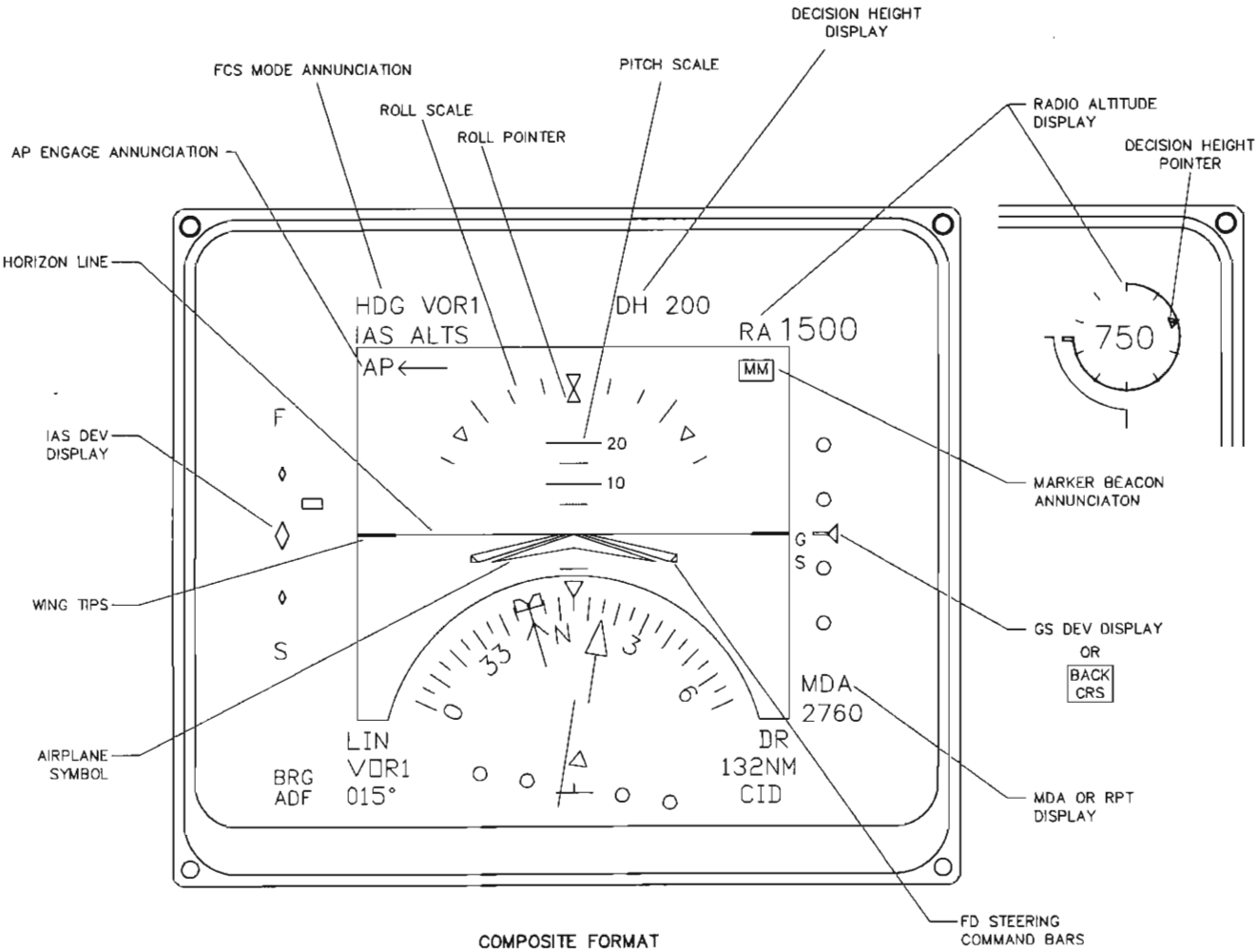

COMPOSITE FORMAT
(ND OR PFD)

THE FOLLOWING FAULT/REVERSION MESSAGES ARE DISPLAYED IN COMPOSITE FORMAT:

DISPLAY TEMP	THE ND/PFD IS OVERHEATING.
CDU	CDU FAILURE DETECTED.
HDG	HEADING FAILURE DETECTED.
ATT	ATTITUDE FAILURE DETECTED.
RA	RADIO ALTIMETER FAILURE DETECTED.
FD	FLIGHT DIRECTOR FAILURE DETECTED.
XCDU	CDU X-SIDE REVERSION MODE IS SELECTED.
XHDG	AHRS X-SIDE REVERSION MODE IS SELECTED.
XATT	AHRS X-SIDE REVERSION MODE IS SELECTED.
-----	DATA IS MISSING.
ELEV	ELEVATOR MISTRIM CONDITION.
AIL	AILERON MISTRIM CONDITION.
RUD	RUDDER MISTRIM CONDITION.

CG0-0230-08-AC-0

ND-870 Navigation Display, Controls and Displays
Figure 3-10 (Sheet 7 of 8)

Table 3-10. ND-870 Navigation Display, Controls and Displays (Cont).

CONTROL OR DISPLAY	FUNCTION/DESCRIPTION
NOTE: Select the composite format by setting the on-side reversion switch to the CMPST DN or CMPST UP position. A combined ND/PFD display then appears on the ND-870 or the PFD-870.	
Airplane symbol	The airplane symbol is a stationary chevron that is used as a reference to indicate FD steering commands and pitch/roll attitude.
Wing tips	A yellow line on each end of the display represents the wing tips of the aircraft. The wing tips are used with the airplane symbol as the attitude reference.
Horizon line	The horizon line is the ground/sky boundary. The horizon line pitches and rotates about the airplane symbol to indicate the aircraft attitude.
Pitch scale	The pitch scale indicates the amount of aircraft pitch attitude. The scale consists of a series of horizontal lines and numeric pitch angle (degree) markings. The aircraft pitch attitude is the scale indication at the airplane symbol.
Roll scale	A stationary roll scale consists of index and triangle marks along an arc centered at the airplane symbol. Scale marks are at 10, 20, 30, 45, and 60° left/right roll angles.
Roll pointer	The roll pointer rotates around the roll scale to indicate the amount of aircraft roll attitude.
FD steering command bars	Integrated V-bars are displayed whenever a flight guidance mode is selected using the on-side MSP-850A. The V-bars rotate from the apex of the airplane symbol to indicate computed pitch and roll flight director steering commands.
GS dev display	Glideslope deviation is displayed when LOC is the active NAV source and a localizer frequency is tuned. When making a back course approach, this display is replaced with a BACK CRS annunciation. Deviation above or below the glidepath is indicated by the position of a triangular pointer relative to the deviation scale. The scale consists of a center mark, two dots above center, and two dots below center.
Radio altitude display	Between 2500 and 1000 feet, aircraft radio altitude is numerically displayed with an "RA" label. Below 1000 feet, aircraft radio altitude is numerically displayed (without the "RA" label) inside a circular indicator. This indicator is a full 360° arc at 1000 feet altitude, and disappears linearly as altitude decreases.
Decision height display	Selected decision height is numerically displayed with a "DH" label. The decision height value is set and selected for display by the on-side AAP. A DH alert is displayed when the aircraft is at or below the set decision height. Near the center of the display, "DH" flashes and then becomes steady.
Decision height pointer	When radio altitude and DH are both below 1000 feet, a triangle symbol is displayed on the radio altitude arc to indicate the selected decision height.
IAS dev display	IAS (speed) deviation is displayed when the IAS bug is selected for display on the ASI. Deviation from the selected IAS reference (bug setting) is indicated by the position of a rectangular pointer relative to the deviation scale. The center of the scale represents the IAS reference; full scale pointer deflection represents 10 knots faster/slower than this reference.

Table 3-10. ND-870 Navigation Display, Controls and Displays (Cont).

CONTROL OR DISPLAY	FUNCTION/DESCRIPTION
Marker beacon annunciation	Marker beacon status is indicated by a boxed "OM" (outer marker), "MM" (middle marker), or " " (inner marker) annunciation.
FCS mode annunciation	Flight control system modes are annunciated in the upper-left of the composite display. Lateral modes are displayed above vertical modes. Active modes are displayed in green (and to the left); armed modes are displayed in white.
AP engage annunciation	When the autopilot is engaged, "AP" annunciates in green, with a horizontal arrow pointing to the coupled side. When the autopilot disengages, this annunciation flashes yellow until the aircraft autopilot disengage button is pressed.
MDA or RPT display	Either minimum decision altitude or reporting altitude may be numerically displayed on the lower-right of the screen. MDA/RPT selection and setting are controlled by the on-side AAP. An MDA alert is displayed when the aircraft is at the minimum decision altitude. Near the center of the display, "MDA" flashes and then becomes steady. An RPT alert is displayed when the aircraft is at the reporting altitude. The "RPT" label flashes and then becomes steady.

This page intentionally left blank.

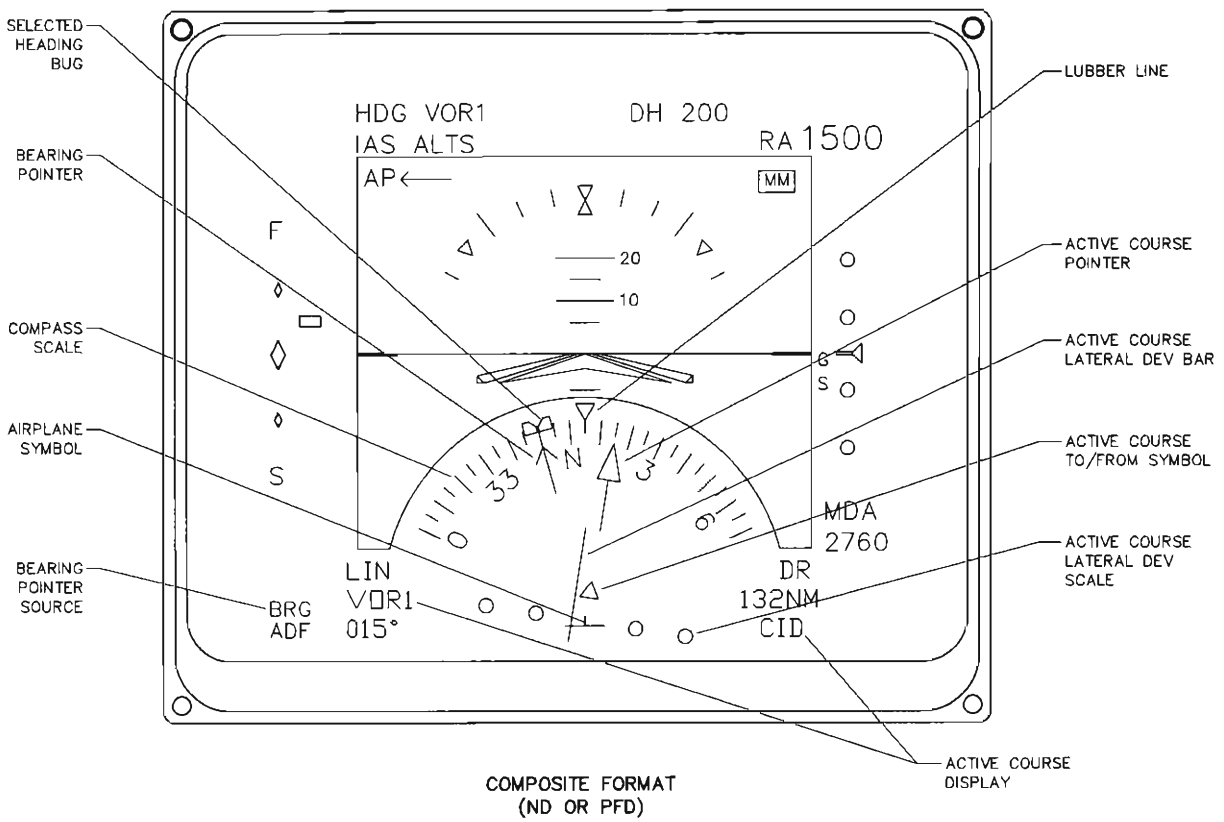

ND-870 Navigation Display, Controls and Displays
Figure 3-10 (Sheet 8 of 8)

Table 3-10. ND-870 Navigation Display, Controls and Displays (Cont).

CONTROL OR DISPLAY	FUNCTION/DESCRIPTION
Compass scale	An expanded section of the compass rose is displayed on the lower portion of the composite screen. The compass rose rotates to indicate the aircraft magnetic heading (read under the lubber line), even though only a partial section of the rose is displayed. The compass rose is centered around the airplane symbol.
Airplane symbol	A fixed (inverted-T) airplane symbol is located in the lower-center of the display and points toward the lubber line.
Lubber line	The lubber line is a fixed triangle symbol located at the top of the compass rose. The present aircraft heading is the compass reading directly under the lubber line.
Selected heading bug	A heading bug symbol is displayed to indicate a selected heading reference. This symbol rotates around the compass rose when the CHP HDG knob is turned. When the bug is positioned beyond the compass display range, a dashed line is displayed from the airplane symbol which provides an angular indication of the selected heading value. The bug position is then numerically displayed on the left or right end (as appropriate) of the compass rose.
Bearing pointer	The bearing pointer is a V-head pointer (or the reciprocal tail). This pointer indicates the bearing to a selectable navaid station or waypoint.
Bearing pointer source	This display annunciates the type of navaid source driving the bearing pointer. The bearing pointer source is selected after the BRG page key is pressed on the CDU. An arrow is displayed by the source if bearing data is unavailable, and the bearing pointer cannot be displayed. The source annunciation becomes boxed and flashes if the selected source has failed.
Active course display	The active course display provides a summary of active NAV course parameters. This display is split; parameters are presented under both ends of the compass rose. A course readout (lower-left of display) numerically shows the active course angle through the selected navaid station or waypoint (also indicated by the active course pointer). Annunciated above this readout is the active NAV source (selected on CDU) and LIN (if deviation is linear). The station ident of the selected navaid is displayed on the lower-right of the screen. Above this ident, the NAV distance to the station (in nautical miles) and a DR annunciation are displayed. Note that the "NM" distance label is replaced with an "H" if VOR is the active NAV source, and the DME is in DME hold mode. The "DR" annunciation is replaced with "VLF" if FMS is the active NAV source, and is in VLF only mode. The NAV source annunciation becomes boxed if the selected source has failed.
Active course pointer	The active course pointer is a solid-line, triangle-head pointer (or the reciprocal tail). This pointer indicates the active NAV course angle, and is numerically repeated in the active course display.
Active course to/from symbol	A wedge-shaped symbol is displayed to annunciate active course to/from direction (except in LOC mode). This symbol rotates as a part of the active course pointer, and points toward the tuned station.
Active course lateral dev bar	The lateral dev bar is the center portion of the active course pointer. This bar moves left or right from the pointer head and tail to indicate lateral deviation from the active NAV course. The amount of deviation is read against a dev scale.
Active course lateral dev scale	The active course lateral dev scale consists of four dots which are displayed perpendicular to the lateral dev bar. Two dots are displayed on either side of the airplane symbol.

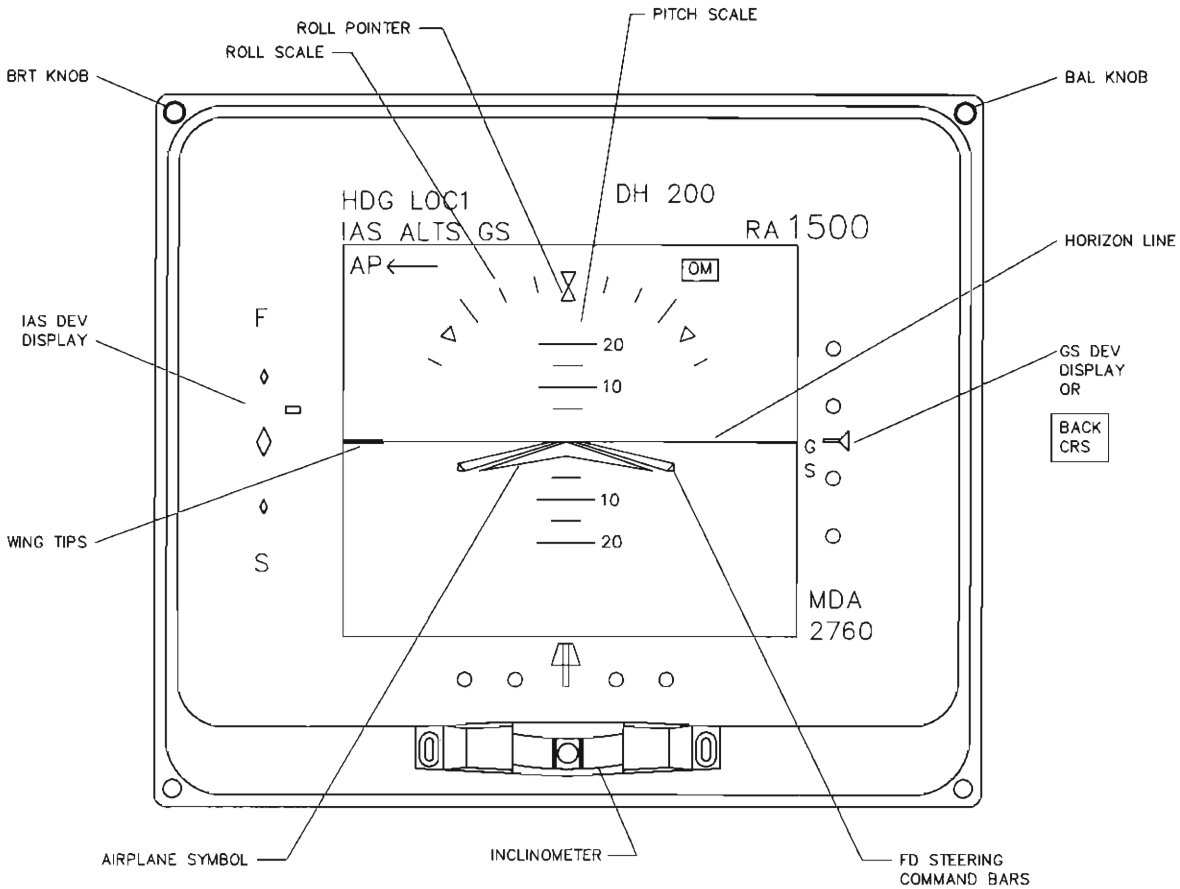

THE FOLLOWING FAULT/REVERSION MESSAGES ARE DISPLAYED ON THE PFD-870:

DISPLAY TEMP	THE PFD IS OVERHEATING.
CDU	CDU FAILURE DETECTED.
ATT	ATTITUDE FAILURE DETECTED.
RA	RADIO ALTIMETER FAILURE DETECTED.
FD	FLIGHT DIRECTOR FAILURE DETECTED.
XCDU	CDU X-SIDE REVERSION MODE IS SELECTED.
XATT	AHRS X-SIDE REVERSION MODE IS SELECTED.
ELEV	ELEVATOR MISTRIM CONDITION.
AIL	AILERON MISTRIM CONDITION.
RUD	RUDDER MISTRIM CONDITION.

CG0-0231-02-AC-0

PFD-870 Primary Flight Display, Controls and Displays
Figure 3-11 (Sheet 1 of 2)

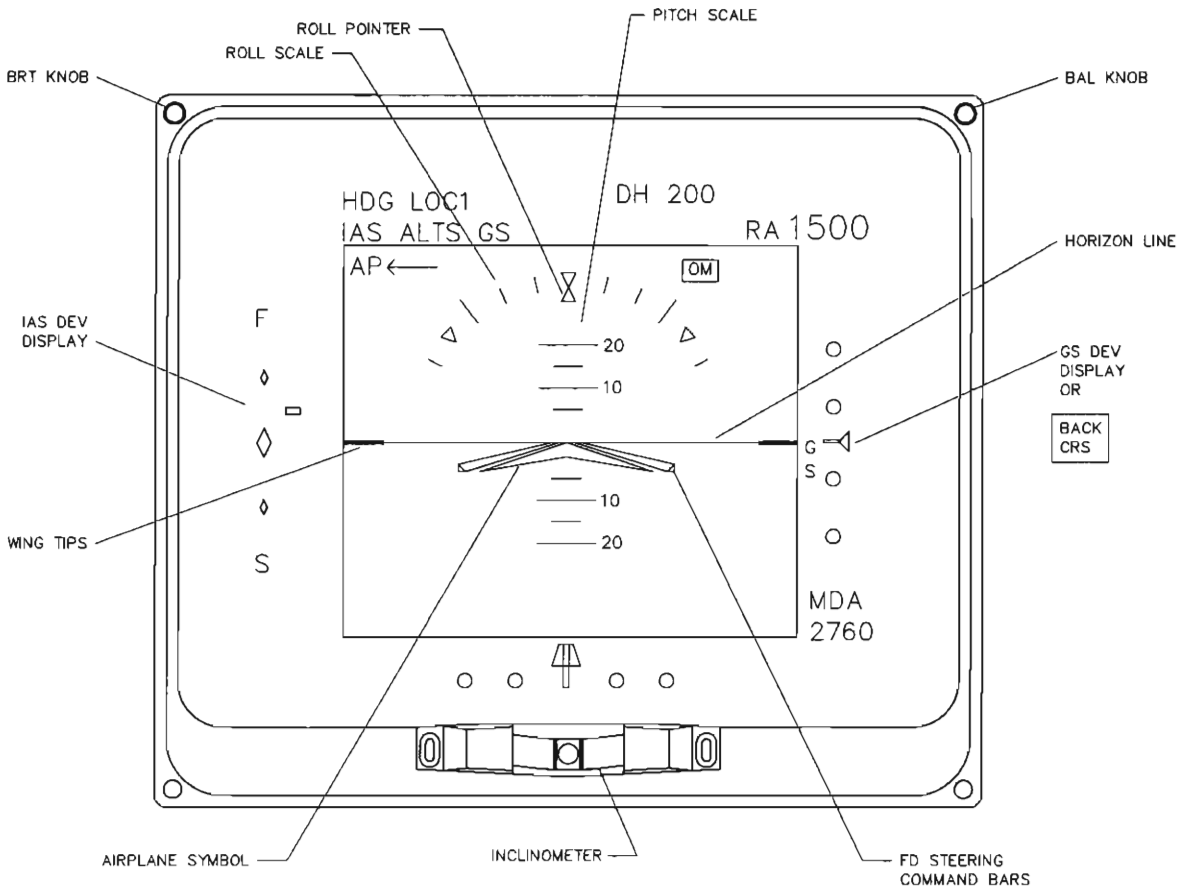

THE FOLLOWING FAULT/REVERSION MESSAGES ARE DISPLAYED ON THE PFD-870:

DISPLAY TEMP	THE PFD IS OVERHEATING.
CDU	CDU FAILURE DETECTED.
ATT	ATTITUDE FAILURE DETECTED.
RA	RADIO ALTIMETER FAILURE DETECTED.
FD	FLIGHT DIRECTOR FAILURE DETECTED.
XCDU	CDU X-SIDE REVERSION MODE IS SELECTED.
XATT	AHRS X-SIDE REVERSION MODE IS SELECTED.
ELEV	ELEVATOR MISTRIM CONDITION.
AIL	AILERON MISTRIM CONDITION.
RUD	RUDDER MISTRIM CONDITION.

CGO-0231-02-AC-0

PFD-870 Primary Flight Display, Controls and Displays
Figure 3-11 (Sheet 1 of 2)

Table 3-11. PFD-870 Primary Flight Display, Controls and Displays.

CONTROL OR DISPLAY	FUNCTION/DESCRIPTION
BRT knob	Rotate this knob to adjust display brightness.
BAL knob	Rotate this knob to adjust display balance.
Inclinometer	The inclinometer is a slip/skid indicator. This device consists of a ball suspended in liquid-filled curved glass tube.
Airplane symbol	The airplane symbol is a stationary chevron that is used as a reference to indicate FD steering commands and pitch/roll attitude.
Wing tips	A yellow line on each end of the display represents the wing tips of the aircraft. The wing tips are used with the airplane symbol as the attitude reference.
Horizon line	The horizon line is the ground/sky boundary. The horizon line pitches and rotates about the airplane symbol to indicate the aircraft attitude.
Pitch scale	The pitch scale indicates the amount of aircraft pitch attitude. The scale consists of a series of horizontal lines and numeric pitch angle (degree) markings. The aircraft pitch attitude is the scale indication at the airplane symbol.
Roll scale	A stationary roll scale consists of index and triangle marks along an arc centered at the airplane symbol. Scale marks are at 10, 20, 30, 45, and 60° left/right roll angles.
Roll pointer	The roll pointer rotates around the roll scale to indicate the amount of aircraft roll attitude.
FD steering command bars	Integrated V-bars are displayed whenever a flight guidance mode is selected using the on-side MSP. The V-bars rotate from the apex of the airplane symbol to indicate computed pitch and roll flight director steering commands. The V-bars flank the airplane symbol when the commands are satisfied.
GS dev display	The glideslope deviation display automatically appears when LOC is the active NAV source and a localizer frequency is tuned. When making a back course approach, this display is replaced with a BACK CRS annunciation. Deviation above or below the glidepath is indicated by the position of a triangular pointer relative to the deviation scale. The scale consists of a center mark, two dots above center, and two dots below center. Each dot represents 75 μA of deviation.
IAS dev display	IAS (speed) deviation is displayed when the IAS bug is selected for display on the ASI. Deviation from the selected IAS reference (bug setting) is indicated by the position of a rectangular pointer relative to the deviation scale. The center of the scale represents the IAS (bug) reference speed. The top ("F") mark on the scale indicates 10 knots faster than reference. The bottom ("S") mark on the scale indicates 10 knots slower than reference. The deviation pointer represents the present IAS speed with respect to the reference.

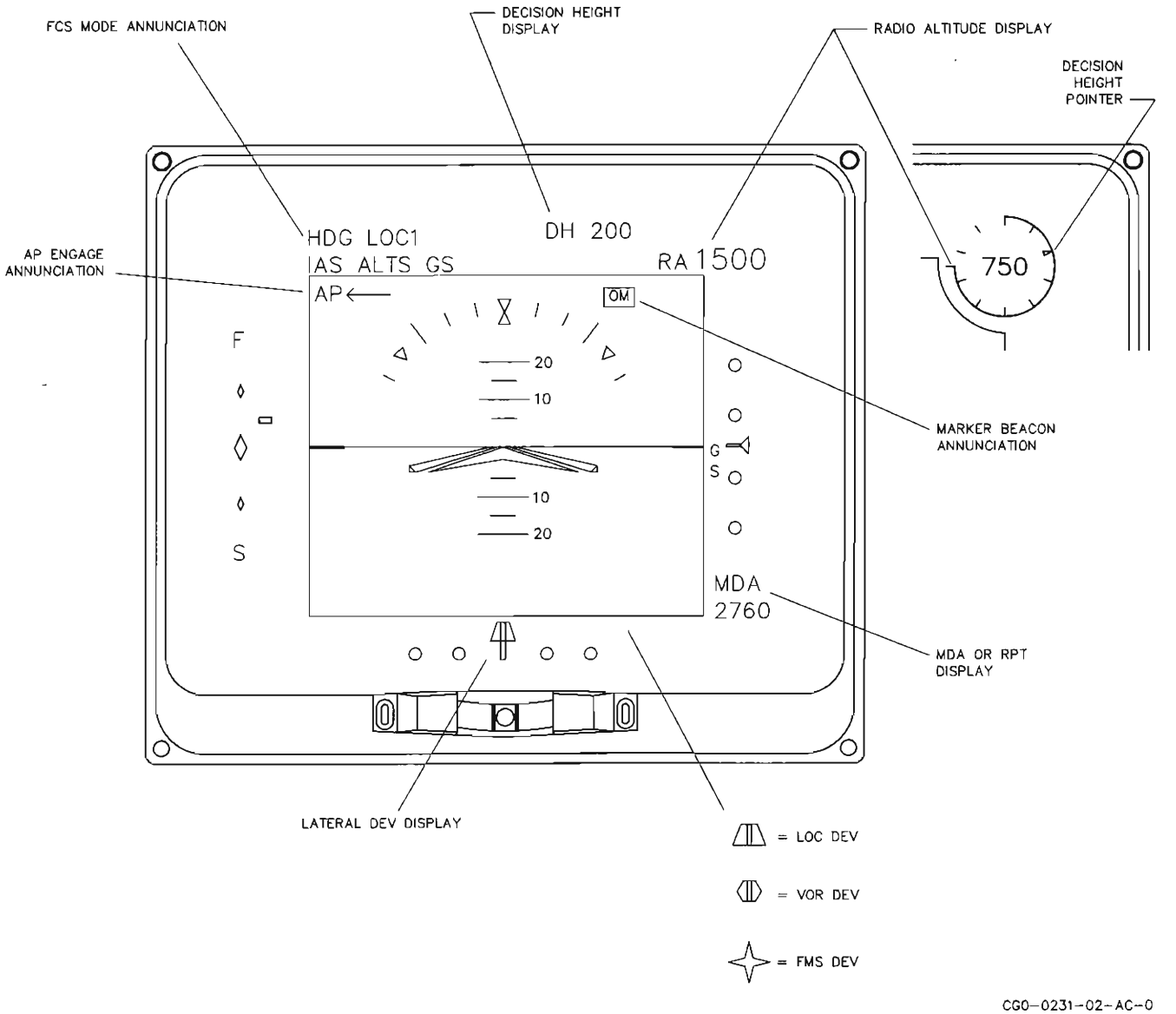

PFD-870 Primary Flight Display, Controls and Displays
Figure 3-11 (Sheet 2 of 2)

Table 3-11. PFD-870 Primary Flight Display, Controls and Displays (Cont).

CONTROL OR DISPLAY	FUNCTION/DESCRIPTION
Radio altitude display	The radio altitude display automatically selects as the aircraft descends through 2500 feet. Between 2500 and 1000 feet, aircraft radio altitude is numerically displayed with an "RA" label. Below 1000 feet, aircraft radio altitude is numerically displayed (without the "RA" label) inside a circular indicator. This indicator is a full 360° arc at 1000 feet altitude, and disappears linearly as altitude decreases. Scale markings are at 100-foot increments.
Decision height display	Selected decision height is numerically displayed with a "DH" label. The decision height value is set and selected for display by the on-side AAP. A DH alert is displayed when the aircraft is at or below the set decision height. Near the center of the display, "DH" flashes and then becomes steady.
Decision height pointer	When radio altitude and DH are both below 1000 feet, a triangle symbol is displayed on the radio altitude arc to indicate the selected decision height.
Marker beacon annunciation	Marker beacon status is indicated by a flashing and boxed "OM" (outer marker), "MM" (middle marker), or " " (inner marker) annunciation. This information is supplied by the on-side VIR.
FCS mode annunciation	Flight control system modes are annunciated in the upper-left of the composite display. Lateral modes are displayed above vertical modes. Active/captured modes are displayed in green (and to the left); armed modes are displayed in white. Refer to the MSP-850A operation description.
AP engage annunciation	When the autopilot is engaged, "AP" annunciates in green, with a horizontal arrow pointing to the coupled side. When the autopilot disengages, this annunciation flashes yellow until the aircraft autopilot disengage button is pressed. Refer to the APP-85D operation description.
MDA or RPT display	Either minimum decision altitude or reporting altitude may be numerically displayed on the lower-right of the screen. MDA/RPT selection and setting are controlled by the on-side AAP. An MDA alert is displayed when the aircraft is at the minimum decision altitude. Near the center of the display, "MDA" flashes and then becomes steady. An RPT alert is displayed when the aircraft is at the reporting altitude. The "RPT" label flashes and then becomes steady.
Lateral dev display	The lateral deviation display is located on the lower-center of the screen. Deviation left or right from the active NAV course is indicated by the position of a pointer relative to a deviation scale. The deviation scale consists of a center mark, two dots left of center, and two dots right of center. Distance labels are displayed when the deviation is linear. The deviation pointer is displayed as a trapezoid (LOC), hexagon (VOR), or star (FMS) symbol depending on the selected active NAV source. The pointer is a trapezoid symbol when localizer deviation is displayed. The pointer is a hexagon when VOR deviation is displayed. The pointer is a star symbol when FMS deviation is displayed. If the active NAV source becomes invalid, the source label (LOC, VOR, or FMS) is displayed in red.

NOTE: Refer to figure 3-10, sheets 7 and 8 for description of PFD/ND composite display.

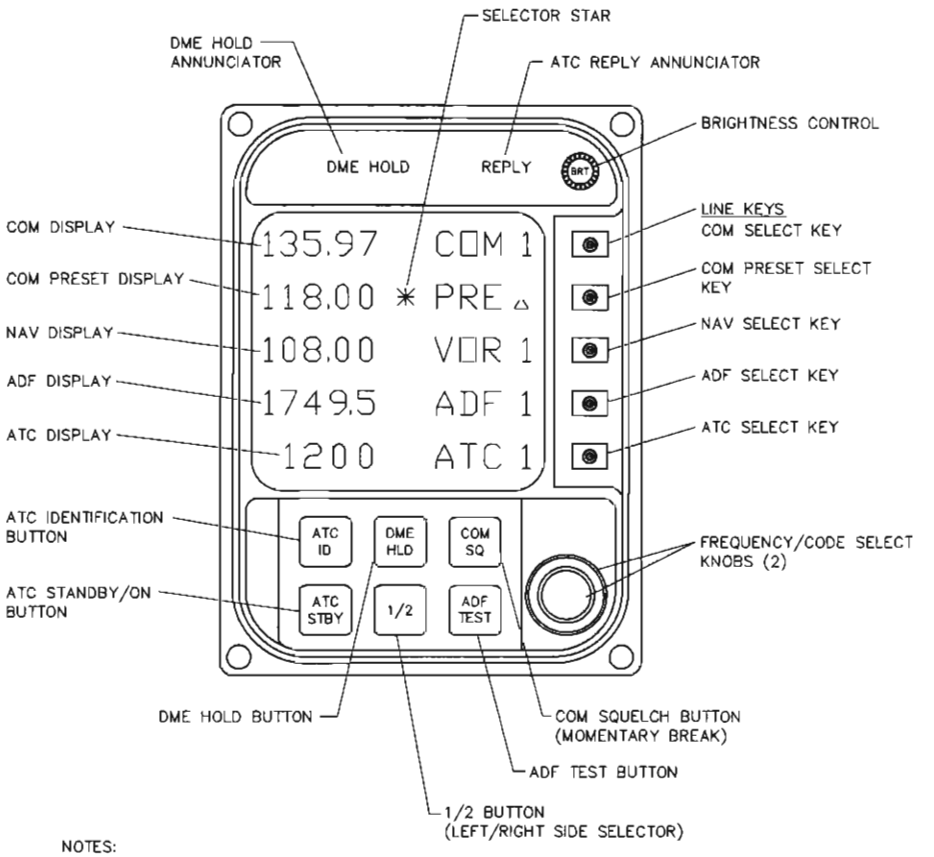

NOTES:

1. THE UPPER-HALF OF THE LEFT-MOST DISPLAY DIGIT BLINKS IF THE ECHO FREQUENCY FROM THE IAPS DOES NOT MATCH THE TUNE FREQUENCY STORED IN RTU MEMORY.

MAIN MENU PAGE

CGO-0224-06-AC-0

RTU-870A Radio Tuning Unit, Controls and Displays
Figure 3-12 (Sheet 1 of 6)

Table 3-12. RTU-870A Radio Tuning Unit, Controls and Displays.

CONTROL OR DISPLAY	FUNCTION/DESCRIPTION
Brightness control	Rotate the BRT knob to adjust display brightness.
Line keys	Press 1 of the 5 line keys to select a COM, PRE, NAV (VOR or ILS), ADF, or ATC tune/control head function. These line keys are used to select a radio for retuning and to access the mode control pages. Press a line key next to a line not marked by the selector star to display the star on that line. The frequency/code select knobs may now be used to change that frequency or code display. The knobs directly retune the radio when the star is at the COM, NAV, ADF, or ATC line. Note that the ATC line key is active only on the RTU which is controlling the selected transponder. Press the line key again (while that line is marked by the selector star) to display the COM/NAV/ADF/ATC mode page for that radio. The mode pages are used to select a variety of control head functions. The PRE function is described later in this table.
Selector star	The selector star indicates the radio that can be tuned by the frequency/code select knobs, and the mode page that can be displayed using a line key. The selector star is normally displayed on the PRE line, and automatically returns to this line after approximately 15 seconds of inactivity.
COM display	Press the COM line key to display the selector star on the COM display line. The frequency displayed on this line is the VHF COM radio active frequency. Rotate the frequency select knobs to change the displayed frequency and directly retune the radio. Press the COM key again (while star is displayed) to view the COM mode page. The digit to the right of the COM legend (1 or 2) indicates which radio is tuned to the displayed frequency. Refer to the description of the 1/2 button.
COM preset display	Press the PRE line key to display the selector star on the COM preset display line (if not already there). Rotate the frequency select knobs to change the displayed preset frequency. Press the PRE line key again (while star is displayed) to interchange the preset and active COM frequencies. The VHF COM radio retunes to the new COM frequency (top line) and the previous COM frequency becomes the new preset frequency (second line). The old frequency is available for instant recall by pressing the PRE line key again. An upward pointing arrow is displayed to the right of the PRE legend while this line is selected. This arrow indicates that the preset frequency can be moved upward and become the active frequency.
NAV display	Press the NAV (VOR or ILS) line key to display the selector star on the NAV display line. The frequency displayed on this line is the VIR/DME radio active frequency. Either "VOR" or "ILS" is displayed, depending on the tuned frequency; "AUT" is displayed when the radio is being tuned by the FMS. Rotate the frequency select knobs to change the displayed frequency and directly retune the radio. Press the NAV key again (while star is displayed) to view the NAV mode page. The digit to the right of the VOR or ILS legend (1 or 2) indicates which radio is tuned to the displayed frequency. Refer to the description of the 1/2 button.
ADF display	Press the ADF line key to display the selector star on the ADF display line. The frequency displayed on this line is the ADF radio active frequency. Rotate the frequency select knobs to change the displayed frequency and directly retune the radio. Press the ADF key again (while star is displayed) to view the ADF mode page. The digit to the right of the ADF legend (1 or 2) indicates which radio is tuned to the displayed frequency. Refer to the description of the 1/2 button. If a single ADF receiver is installed, the right RTU does not display an ADF 2 line.

Table 3-12. RTU-870A Radio Tuning Unit, Controls and Displays (Cont).

CONTROL OR DISPLAY	FUNCTION/DESCRIPTION
ATC display	This line is displayed only on the RTU that is controlling the active transponder. Press the ATC line key to display the selector star on the ATC display line. The ATC code displayed on this line is the CAD-870/TDR-90 active transponder code. Rotate the code select knobs to change the displayed code; the transponder immediately responds to the new code. Press the ATC key again (while star is displayed) to view the ATC mode page. The digit to the right of the ATC legend (1 or 2) indicates which transponder is active. ATC 1/2 selection is made on the aircraft center reversion panel.
Frequency/code select knobs	Rotate these two concentric knobs to change the frequency or code displayed on the starred display line. The larger knob changes the most significant digits, and the smaller knob changes the two least significant digits of the display.
COM squelch button	Press the COM SQ button to momentarily disable the VHF COM receiver squelch circuits. When the button is released, squelch returns to normal.
ADF test button	Press the ADF TEST button to initiate the ADF radio self-test routine. Note that "TEST" is displayed (instead of "ADF") in the ADF display line while the button is pressed.
1/2 button	Normally each RTU controls only the on-side COM/NAV/ADF radios. Press and hold the 1/2 button to display the cross-side frequencies; these frequencies can only be changed by the cross-side RTU. The RTU becomes enabled to control both the left (1) and right (2) side radios when the cross-side RTU is in reversion mode (ENG DATA or X-SIDE). Press the 1/2 button to select either the left (1) or right (2) bank of COM/NAV/ADF radios to be controlled by the RTU. ATC 1/2 selection is made on the aircraft center reversion panel. The COM, NAV, ADF, and ATC display lines indicate the selected side next to the line keys.
DME hold button	Press the DME HLD button to hold the DME to the current frequency, and allow the NAV receiver to be independently retuned. When this button is pressed, the DME HOLD annunciator (located on top center of the RTU) lights. Press the DME HLD button a second time to cancel hold; the DME then retunes to the active NAV frequency.
ATC standby/on button	The ATC STBY button is active only on the RTU which is controlling the selected transponder. Press this button to apply power to the TDR transponder, but prevent it from transmitting replies. Press this button only during taxi or when requested by ATC. Note that "STBY" is displayed (instead of "ATC") in the ATC display line when this button is pushed.
ATC identification button	The ATC ID button is active only on the RTU which is controlling the selected transponder. Press this button to transmit a special identification pattern that is displayed on the ground controller's radar screen. Press this button only when requested to "squawk ident" by the ground controller. Note that "ID" is displayed (instead of "ATC") in the ATC display line for about 20 seconds when this button is pushed.
DME hold annunciator	The DME HOLD annunciator lights to indicate that the DME is being held to the NAV frequency that was active when DME hold was selected. The DME hold frequency is displayed on the NAV mode page.
ATC reply annunciator	The REPLY annunciator lights when the TDR transponder replies to an interrogation.

This page intentionally left blank.

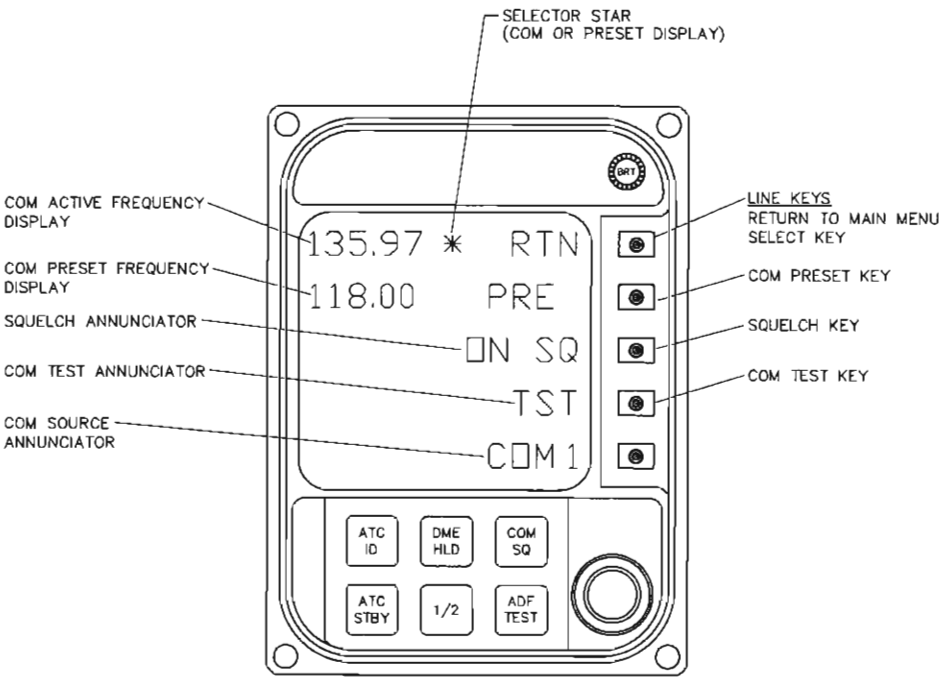

COM PAGE

CGO-0224-06-AC-0

RTU-870A Radio Tuning Unit, Controls and Displays
Figure 3-12 (Sheet 2 of 6)

Table 3-12. RTU-870A Radio Tuning Unit, Controls and Displays (Cont).

CONTROL OR DISPLAY	FUNCTION/DESCRIPTION
COM mode page	Press the COM line key twice to select the COM mode page. The RTU will automatically return to the main menu page after approximately 15 seconds of inactivity.
COM active frequency display	This display indicates the active VHF COM radio frequency.
COM preset frequency display	This display indicates the preset COM frequency that is available to immediately retune the VHF radio.
COM source annunciator	The COM source annunciator indicates which radio (COM 1 or COM 2) is being tuned by the RTU.
Selector star	The selector star indicates which COM frequency can be changed by the frequency select knobs. Line keys move the star to either the active COM (RTN) or to the preset COM (PRE) line.
Return to main menu select key	Press the RTN key to move the selector star to the active frequency display line (if not already there). Rotate the frequency select knobs to change the displayed COM frequency and directly retune the radio. Press the RTN key again to return to the RTU main menu page.
COM preset key	Press the PRE key to move the selector star to the preset frequency display. An upward pointing arrow appears to the right of the PRE legend. Rotate the frequency select knobs to change the displayed preset frequency. Press the PRE key again to interchange the preset and active COM frequencies. The radio retunes to the new COM frequency (top line); the previous COM frequency becomes the new preset frequency (second line). The old frequency is available for instant recall by pressing the PRE key again.
Squelch key and annunciator	Press the SQ key to alternately enable (ON SQ) or disable (OFF SQ) the receiver squelch circuits.
COM test key and annunciator	Press the TST key to initiate the VHF radio self-test routine (ON TST). When the key is released, test mode turns off (TST).

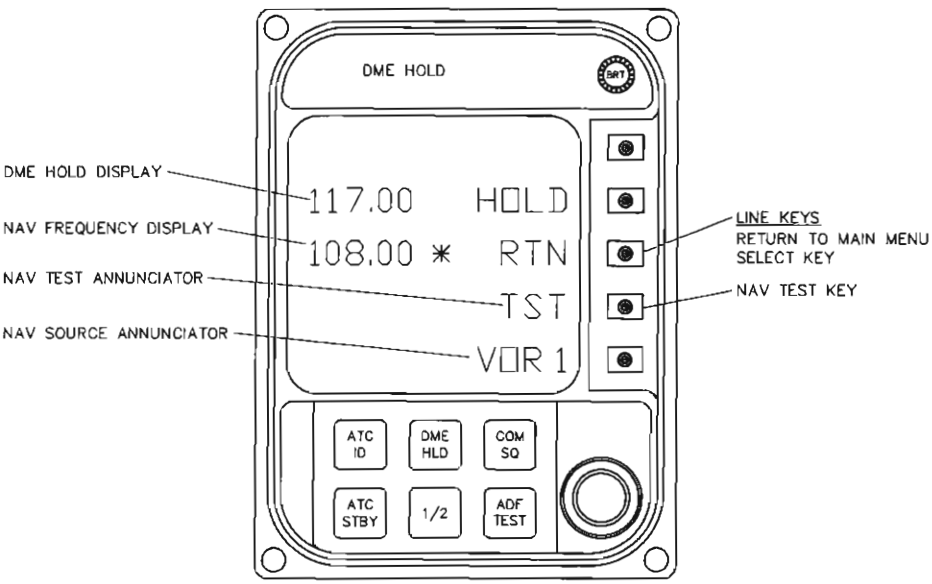

NAV PAGE

CGO-0224-06-AC-0

RTU-870A Radio Tuning Unit, Controls and Displays
Figure 3-12 (Sheet 3 of 6)

Table 3-12. RTU-870A Radio Tuning Unit, Controls and Displays (Cont).

CONTROL OR DISPLAY	FUNCTION/DESCRIPTION
NAV mode page	Press the NAV (VOR or ILS) line key twice to select the NAV mode page. The RTU will automatically return to the main menu page after approximately 15 seconds of inactivity.
NAV frequency display	This display indicates the active VIR NAV frequency that can be directly changed by the frequency select knobs.
NAV source annunciator	The NAV source annunciator indicates which radio (VOR1, ILS1, VOR2, or ILS2) is being tuned by the RTU. VOR or ILS annunciates, depending on the selected NAV frequency; AUT annunciates when the radio is being tuned by the FMS.
Return to main menu select key	Press the RTN key to return to the RTU main menu page.
NAV test key and annunciator	Press the TST key to initiate the VIR radio self-test routine (ON TST). When the key is released, test mode turns off (TST).
DME hold display	This display indicates the frequency that the DME is held to. This display is presented only if the DME is in hold mode (DME HLD button pushed).

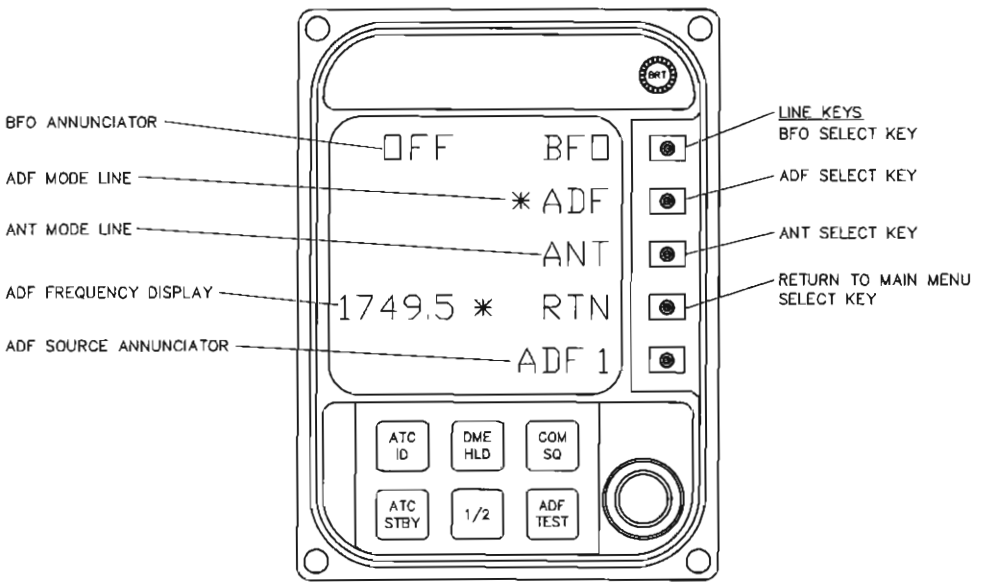

ADF PAGE

CGO–0224–06–AC–0

RTU-870A Radio Tuning Unit, Controls and Displays
Figure 3-12 (Sheet 4 of 6)

Table 3-12. RTU-870A Radio Tuning Unit, Controls and Displays (Cont).

CONTROL OR DISPLAY	FUNCTION/DESCRIPTION
ADF mode page	Press the ADF line key twice to select the ADF mode page. The RTU will automatically return to the main menu page after approximately 15 seconds of inactivity.
ADF frequency display	This display indicates the active ADF frequency that can be directly changed by the frequency select knobs.
ADF source annunciator	The ADF source annunciator indicates which radio (ADF 1 or ADF 2) is being tuned by the RTU. If a single ADF receiver is installed, the ADF 2 functions are not available.
ADF line key and mode line	Press the ADF line key to select the ADF mode. A selector star on this line annunciates ADF mode selection. The ADF radio provides bearing-to-the-station and aural outputs in ADF mode.
ANT line key and mode line	Press the ANT line key to select the ANT mode. A selector star on this line annunciates ANT mode selection. The ADF radio provides only an aural output in ANT mode.
BFO line key and annunciator	Press the BFO key to select (ON BFO) or deselect (OFF BFO) the BFO mode. The ADF radio provides a 1000-Hz aural output tone in BFO mode when a keyed cw signal is received.
Return to main menu select key	Press the RTN key to return to the RTU main menu page.

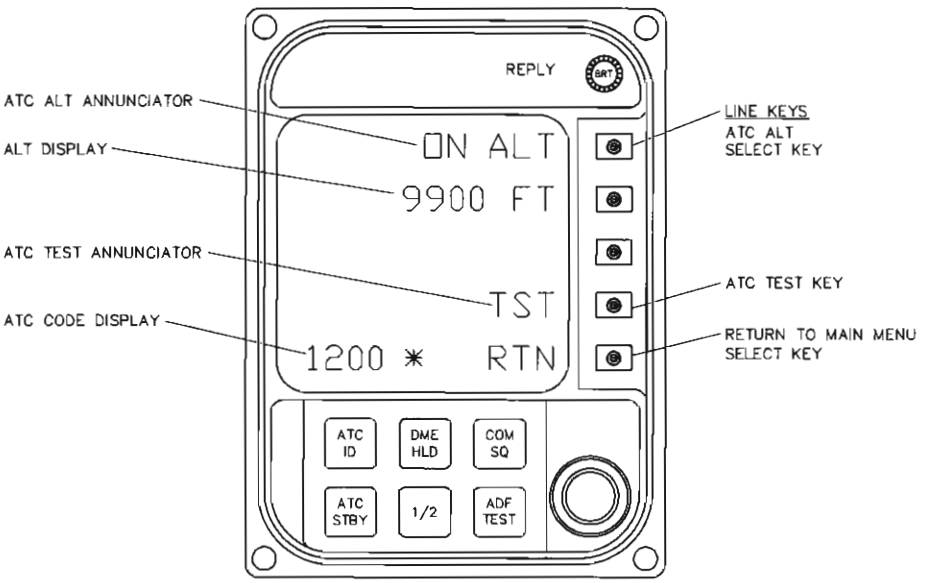

ATC PAGE

CGO-0224-06-AC-0

RTU-870A Radio Tuning Unit, Controls and Displays
Figure 3-12 (Sheet 5 of 6)

Table 3-12. RTU-870A Radio Tuning Unit, Controls and Displays (Cont).

CONTROL OR DISPLAY	FUNCTION/DESCRIPTION
ATC mode page	Press the ATC line key twice to select the ATC mode page. The RTU will automatically return to the main menu page after approximately 15 seconds of inactivity.
ATC code display	This display indicates the selected transponder reply code that can be directly changed by the code select knobs. Note that "STBY" is displayed instead of "RTN" when the ATC STBY button is pushed. "ID" is displayed instead of "RTN" (for about 20 seconds) when the ATC ID button is pushed.
ATC ALT line key and annunciator	Press the ALT line key to alternately select altitude reporting (ON ALT) or reply (OFF ALT) mode. Altitude reporting (ON ALT) mode is the normal operating mode. The transponder replies to interrogation pulses, and also transmits uncorrected barometric altitude (when interrogated in mode C). Reply (OFF ALT) mode is normally used only when requested by ATC. The transponder replies to interrogation pulses, but does not transmit altitude data.
ALT display	This display indicates the uncorrected barometric altitude that is transmitted in the ON ALT mode.
ATC test key and annunciator	Press the TST key to initiate the TDR self-test routine (ON TST). When the key is released, test mode turns off (TST).
Return to main menu select key	Press the RTN key to return to the RTU main menu page.

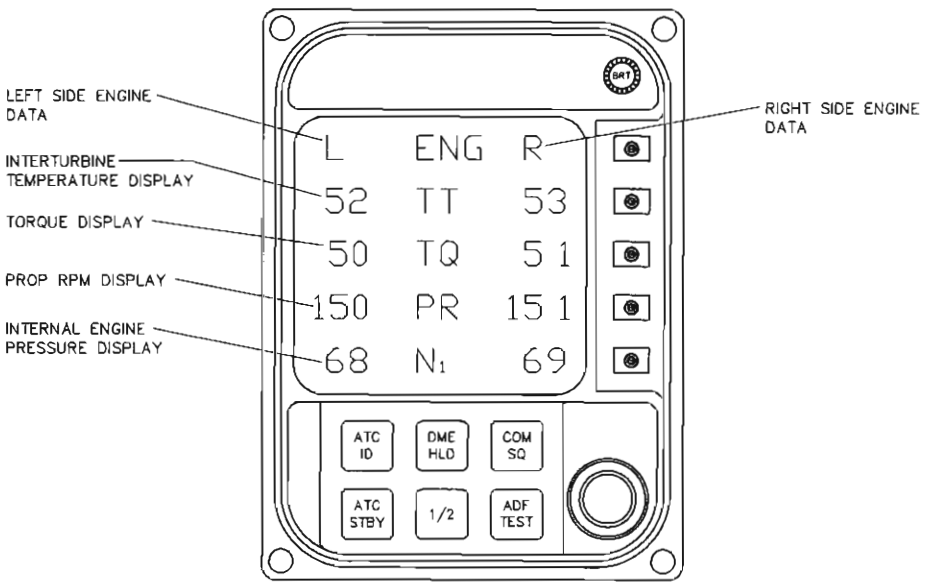

REVERSION PAGE

CGO-0224-06-AC-0

RTU-870A Radio Tuning Unit, Controls and Displays
Figure 3-12 (Sheet 6 of 6)

Table 3-12. RTU-870A Radio Tuning Unit, Controls and Displays (Cont).

CONTROL OR DISPLAY	FUNCTION/DESCRIPTION
Reversion page	Toggle the RTU switch (on the aircraft center reversionary panel) to the ENG DATA position to display the reversion page. The RTU suspends normal COM, NAV, ADF, and ATC control and display functions; parameters from both left and right side EDC engine data concentrators are then displayed.
Interturbine temperature display	The TT display indicates the interturbine temperature (in °C ÷ 10).
Torque display	The TQ display indicates the engine torque (in percent of red line value).
Prop rpm display	The PR display indicates the propeller speed (in rpm ÷ 10).
Internal engine pressure display	The N_1 display indicates the internal engine pressure (in percent of red line value).

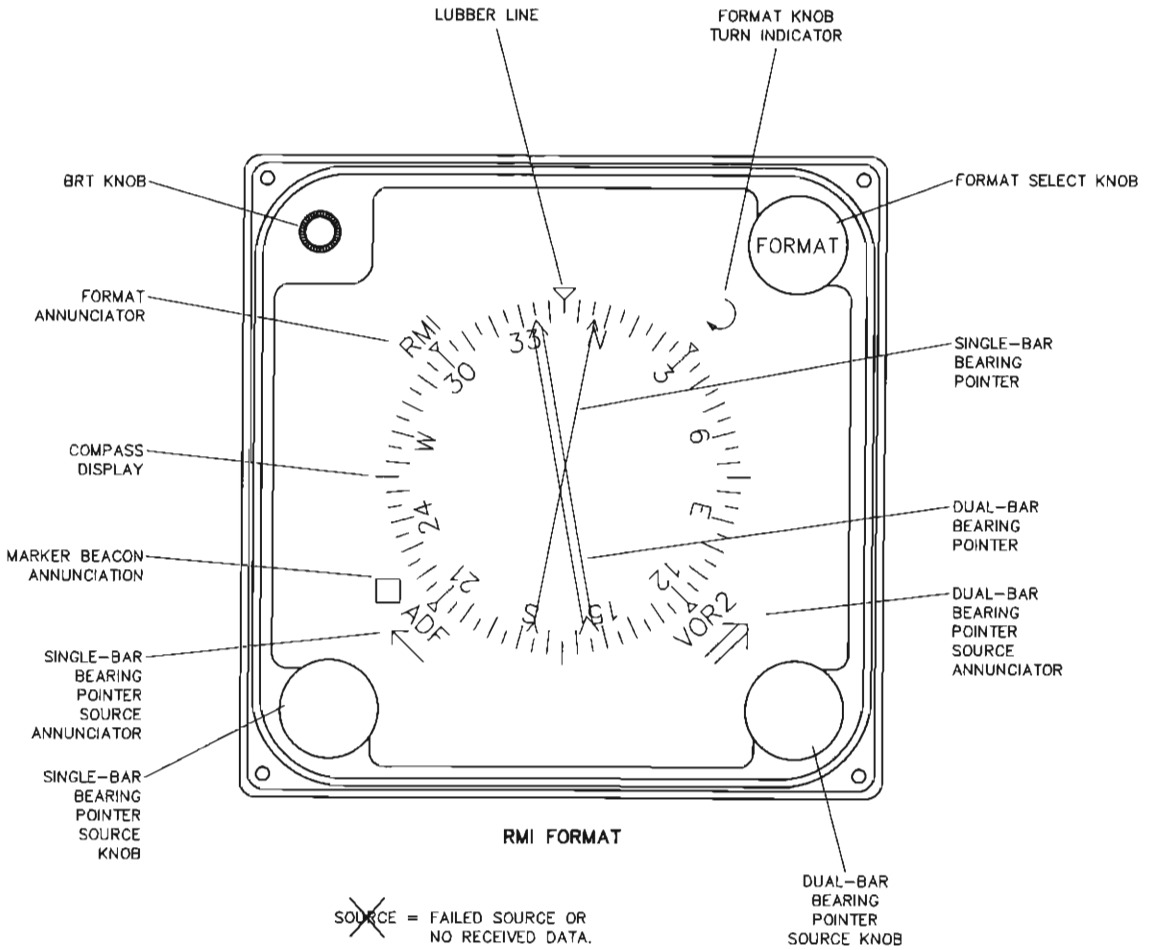

CGO-0232-05-AC-0

SDU-640A Sensor Display Unit, Controls and Displays
Figure 3-13 (Sheet 1 of 5)

Table 3-13. SDU-640A Sensor Display Unit, Controls and Displays.

CONTROL OR DISPLAY	FUNCTION/DESCRIPTION
BRT knob	Rotate this knob to adjust display brightness.
Compass display	The compass display is a full 360° rose in all formats. The compass rose contains index markings every 5°; alphanumeric markings are displayed at 30° intervals. Additional fixed index marks are displayed outside the rose perimeter at 45° intervals with respect to the lubber line.
Lubber line	The lubber line is a fixed triangle symbol located at the top of the compass rose. The present (cross-side) aircraft heading is the compass reading directly under the lubber line.
Marker beacon annunciation	Marker beacon status is indicated by a flashing and boxed "OM" (outer marker), "MM" (middle marker), or " " (inner marker) annunciation. This annunciation is displayed in all formats.
Format select knob and annunciator	Rotate the FORMAT knob to select the display format of the center section of the indicator. Available formats in (clockwise) order of selection are RMI, VLF, VOR 1 (or LOC 1), DME, VOR 2 (or LOC 2), and RMI (again). After RMI format is selected, rotate the knob in the opposite direction to select a different format. The selected format annunciates in the upper left of the screen. VOR or LOC annunciates (not both), depending on the tuned NAV frequency.
RMI format	A full screen RMI is displayed in the RMI format. No additional data is displayed in the center section of the indicator. Bearing pointers (when displayed) appear as full-length single or dual bar pointers.
Format knob turn indicator	In the RMI format, a clockwise or counterclockwise pointing arrow is displayed to indicate the direction that the FORMAT knob must be turned to select a different format.
Single-bar bearing pointer	A single-bar pointer may be selected for display. This pointer indicates bearing to a selected NAV station.
Single-bar bearing pointer source knob and annunciator	Rotate the lower left knob to display the bearing pointer and select the NAV source which drives the pointer. The selected source (none, VOR 1, ADF (or ADF 1), and FMS) and a pointer icon annunciate near the knob. If a localizer frequency is tuned while VOR bearing is displayed, LOC 1 annunciates and the pointer is removed. If valid bearing data is not available, the pointer is not displayed.
Dual-bar bearing pointer	A dual-bar pointer may be selected for display. This pointer indicates bearing to a selected NAV station.
Dual-bar bearing pointer source knob and annunciator	Rotate the lower right knob to display the bearing pointer and select the NAV source which drives the pointer. The selected source (none, VOR 2, ADF (or ADF 2), and FMS) and a pointer icon annunciate near the knob. If a localizer frequency is tuned while VOR bearing is displayed, LOC 2 annunciates and the pointer is removed. If valid bearing data is not available, the pointer is not displayed.

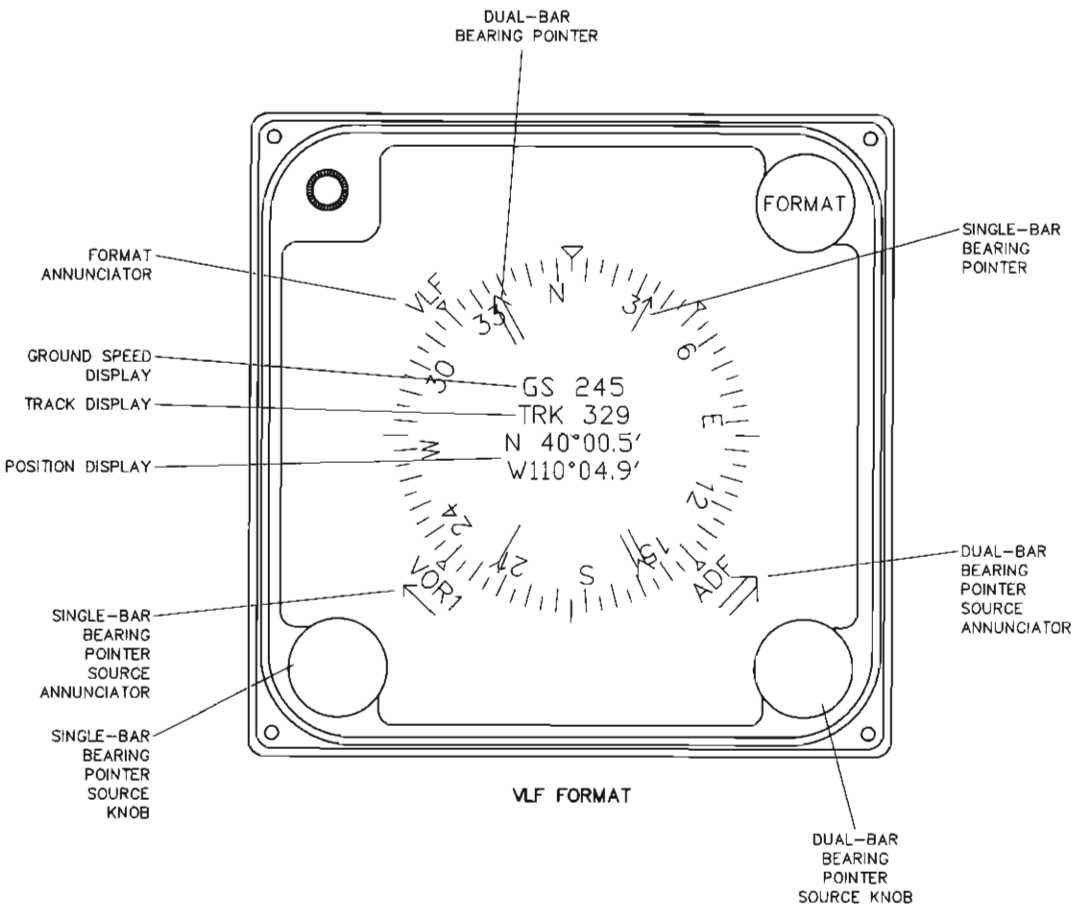

CGO-0232-05-AC-0

SDU-640A Sensor Display Unit, Controls and Displays
Figure 3-13 (Sheet 2 of 5)

Table 3-13. SDU-640A Sensor Display Unit, Controls and Displays (Cont).

CONTROL OR DISPLAY	FUNCTION/DESCRIPTION
VLF format	Ground speed, magnetic track, and present position coordinates from the CMA are digitally displayed in the center section of the indicator. Bearing pointers (when selected) are only partially displayed, so the VLF data is not overwritten.
Format annunciator	"VLF" annunciates in the upper left of the screen when VLF format is selected.
Ground speed display	The GS display numerically indicates the VLF computed ground speed (in knots).
Track display	The TRK display numerically indicates the VLF magnetic track angle (in degrees).
Position display	VLF computed present position latitude and longitude coordinates are numerically displayed (in degrees and minutes).
Single-bar bearing pointer	A single-bar pointer may be selected for display. The pointer head and reciprocal tail indicate the bearing to a selected NAV station.
Single-bar bearing pointer source knob and annunciator	Rotate the lower left knob to display the bearing pointer and select the NAV source which drives the pointer. The selected source and a pointer icon annunciate near the knob. If a localizer frequency is tuned while VOR bearing is displayed, LOC 1 annunciates and the pointer is removed. If valid bearing data is not available, the pointer is not displayed.
Dual-bar bearing pointer	A dual-bar pointer may be selected for display. The pointer head and reciprocal tail indicate the bearing to a selected NAV station.
Dual-bar bearing pointer source knob and annunciator	Rotate the lower right knob to display the bearing pointer and select the NAV source which drives the pointer. The selected source and a pointer icon annunciate near the knob. If a localizer frequency is tuned while VOR bearing is displayed, LOC 2 annunciates and the pointer is removed. If valid bearing data is not available, the pointer is not displayed.

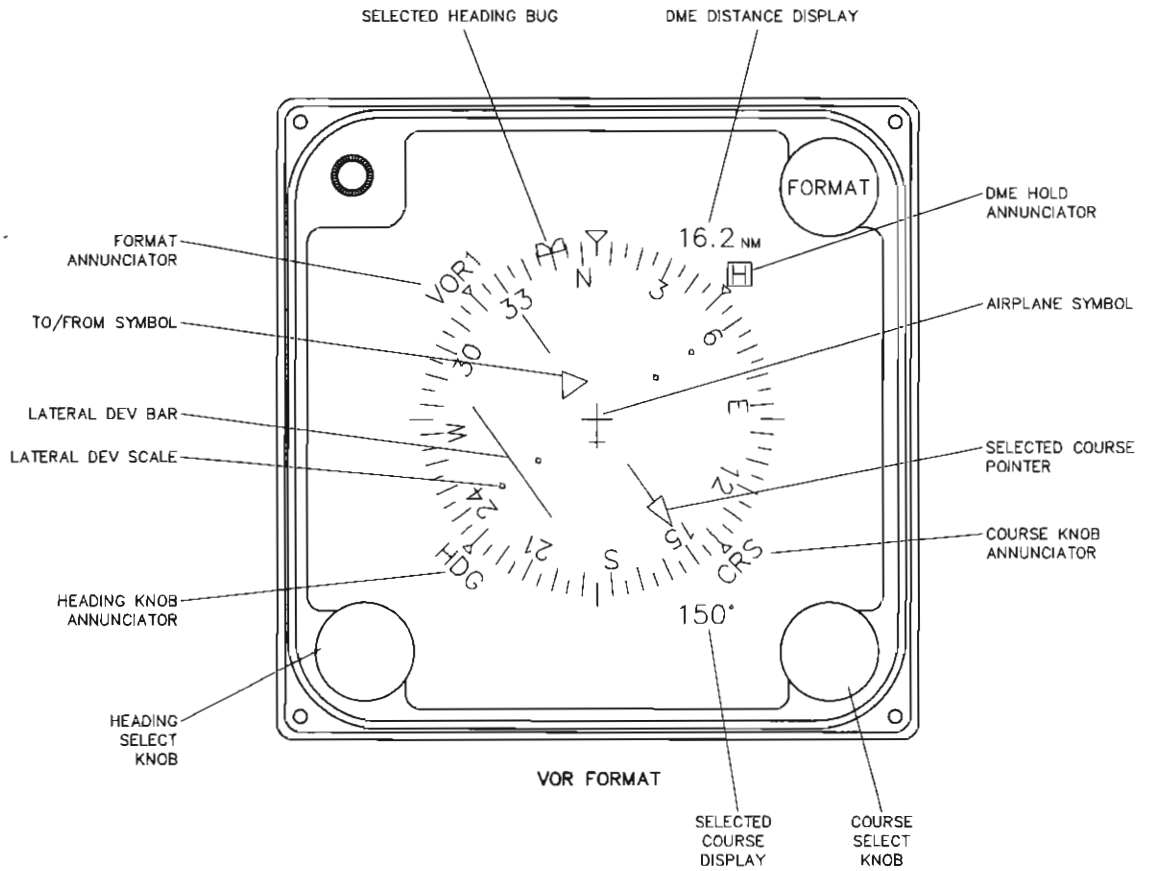

CG0-0232-05-AC-0

SDU-640A Sensor Display Unit, Controls and Displays
Figure 3-13 (Sheet 3 of 5)

Table 3-13. SDU-640A Sensor Display Unit, Controls and Displays (Cont).

CONTROL OR DISPLAY	FUNCTION/DESCRIPTION
VOR format	The center section of the indicator simulates an HSI/ND display in the VOR and LOC formats. Bearing pointers are not displayed in VOR format.
Format annunciator	"VOR 1" or "VOR 2" annunciate in the upper left of the screen when VOR 1 or VOR 2 format is selected.
Airplane symbol	A fixed airplane symbol is displayed in the center of the rose. This reference symbol points toward the lubber line.
Selected heading bug	A bug symbol is displayed to indicate a selected heading reference. This symbol rotates around the compass rose when the heading select (HDG) knob is turned.
Heading knob annunciator	"HDG" annunciates near the heading select knob (instead of a bearing pointer source annunciation) in this format.
Heading select knob	Rotate the lower left (HDG) knob to move the selected heading bug symbol around the compass rose.
Selected course pointer and display	The selected course pointer is a triangle-head pointer with a reciprocal tail. This pointer indicates a selected course angle through the tuned VOR 1 or VOR 2 station, and is numerically repeated in the selected course display.
Course knob annunciator	"CRS" annunciates near the course select knob (instead of a bearing pointer source annunciation) in this format.
Course select knob	Rotate the lower right (CRS) knob to select the desired course angle. This angle is indicated by the selected course pointer and display.
To/from symbol	A wedge-shaped symbol is displayed to annunciate selected course to/from direction. This symbol rotates as a part of the course pointer, and points toward the tuned VOR station. The wedge switches direction when the course differs from the selected VOR radial by more than 90°.
Lateral dev bar and scale	The lateral dev bar is the center portion of the selected course pointer. This bar moves left or right from the pointer head and tail to indicate lateral deviation from the selected course. The amount of deviation is read against a dev scale, which consists of four dots displayed perpendicular to the lateral dev bar. Each dot represents 5° of deviation.
DME distance display	The DME distance (in nautical miles) from the aircraft to the tuned VOR station is displayed in the upper right of the screen. If DME data is invalid, the distance display is replaced by a boxed DME fail annunciation.
DME hold annunciator	A boxed "H" annunciates under the DME distance display when DME hold is selected.

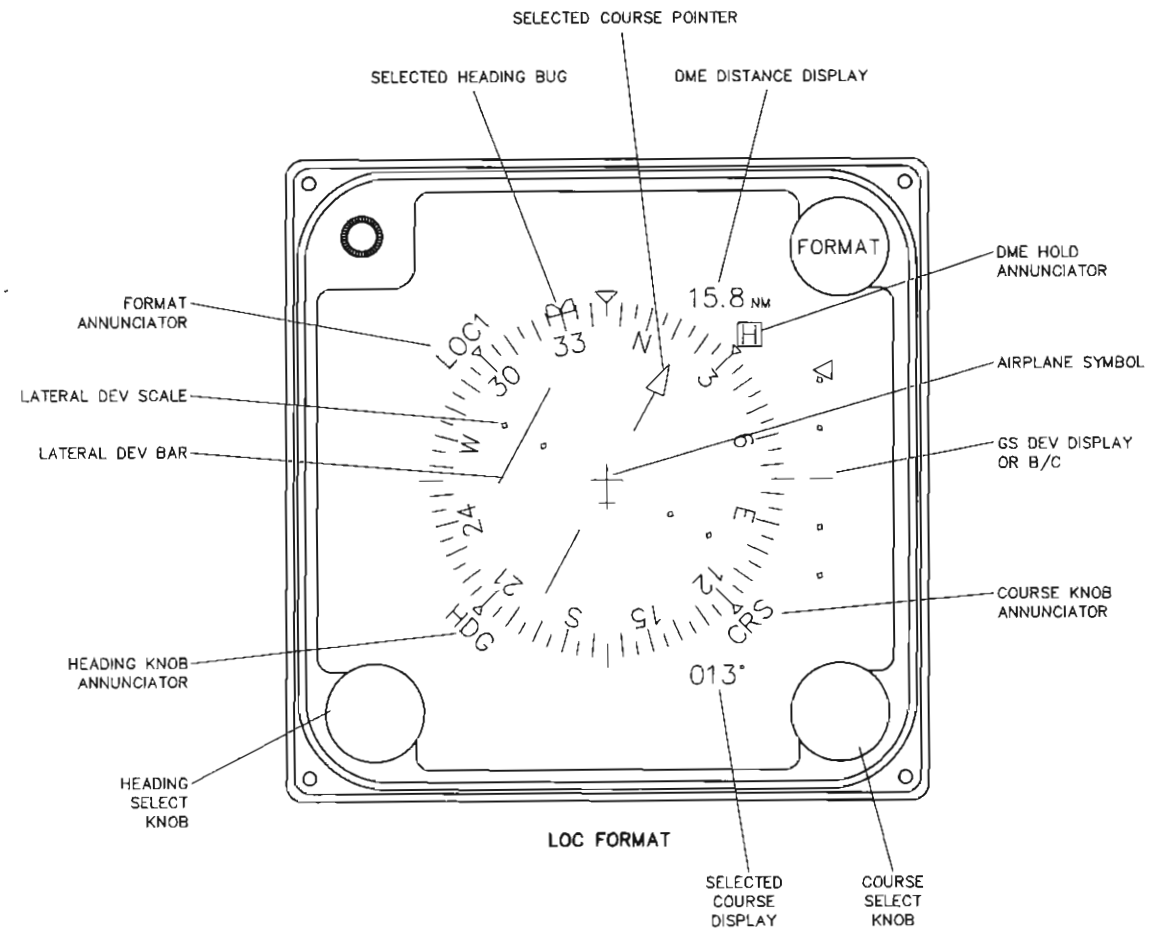

CGO-0232-05-AC-0

SDU-640A Sensor Display Unit, Controls and Displays
Figure 3-13 (Sheet 4 of 5)

Table 3-13. SDU-640A Sensor Display Unit, Controls and Displays (Cont).

CONTROL OR DISPLAY	FUNCTION/DESCRIPTION
LOC format	The center section of the indicator simulates an HSI/ND display in the VOR and LOC formats. Bearing pointers are not displayed in LOC format.
Format annunciator	"LOC 1" or "LOC 2" annunciate in the upper left of the screen when LOC 1 or LOC 2 format is selected.
Airplane symbol	A fixed airplane symbol is displayed in the center of the rose. This reference symbol points toward the lubber line.
Selected heading bug	A bug symbol is displayed to indicate a selected heading reference. This symbol rotates around the compass rose when the heading select (HDG) knob is turned.
Heading knob annunciator	"HDG" annunciates near the heading select knob (instead of a bearing pointer source annunciation) in this format.
Heading select knob	Rotate the lower left (HDG) knob to move the selected heading bug symbol around the compass rose.
Selected course pointer and display	The selected course pointer is a triangle-head pointer with a reciprocal tail. This pointer indicates a selected course angle through the tuned LOC 1 or LOC 2 station, and is numerically repeated in the selected course display.
Course knob annunciator	"CRS" annunciates near the course select knob (instead of a bearing pointer source annunciation) in this format.
Course select knob	Rotate the lower right (CRS) knob to select the desired course angle. This angle is indicated by the selected course pointer and display.
Lateral dev bar and scale	The lateral dev bar is the center portion of the selected course pointer. This bar moves left or right from the pointer head and tail to indicate localizer deviation. The amount of deviation is read against a dev scale, which consists of four dots displayed perpendicular to the lateral dev bar. Each dot represents 0.0775 DDM of deviation.
GS dev display	The GS dev display automatically appears when a localizer (1 or 2) frequency is tuned. When making a back course approach, this display is replaced with a B/C annunciation. The B/C annunciation displays when the selected course differs from the aircraft heading by more than 90°. Deviation above or below the glidepath is indicated by the position of a triangular pointer relative to the deviation scale. The scale consists of a center mark, two dots above center, and two dots below center. Each dot represents 0.0875 DDM of deviation.
DME distance display	The DME distance (in nautical miles) from the aircraft to the tuned LOC station is displayed in the upper right of the screen. If DME data is invalid, the distance display is replaced by a boxed DME fail annunciation.
DME hold annunciator	A boxed "H" annunciates under the DME distance display when DME hold is selected.

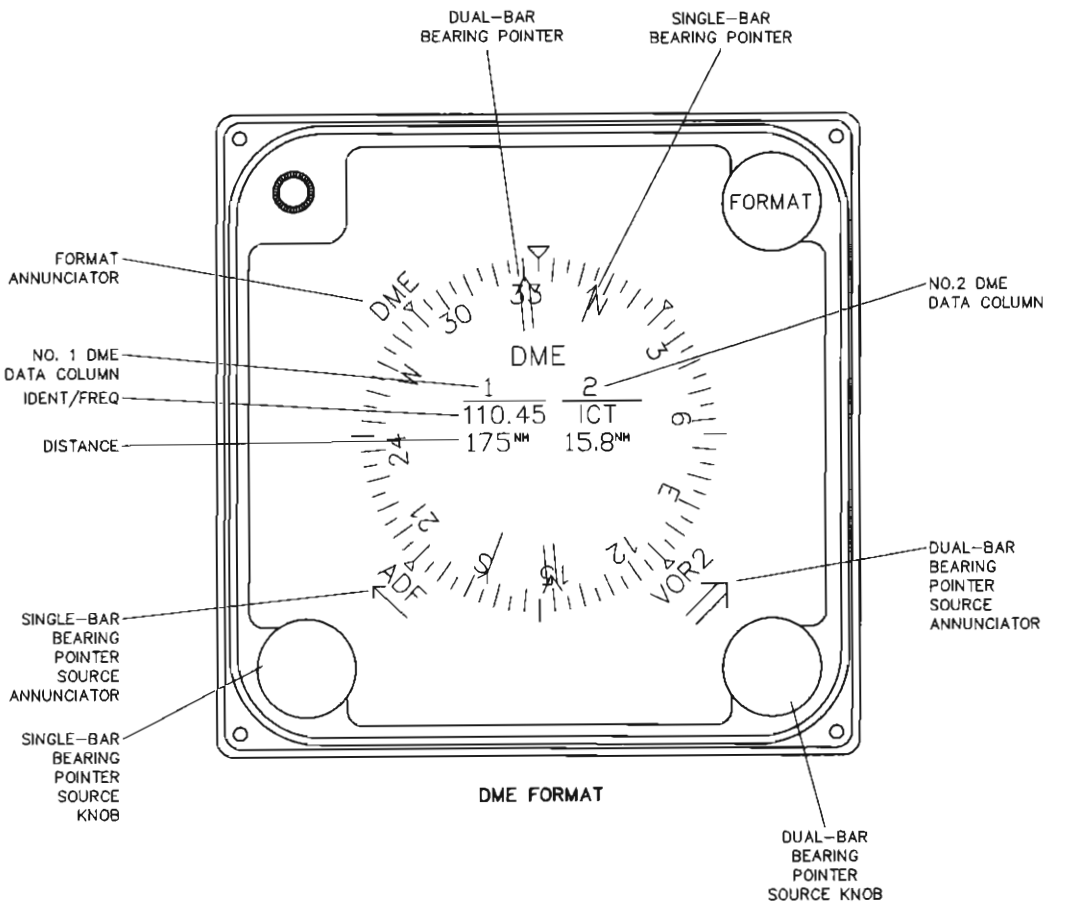

~~GGO~~-0232-05-AC-0

SDU-640A Sensor Display Unit, Controls and Displays
Figure 3-13 (Sheet 5 of 5)

Table 3-13. SDU-640A Sensor Display Unit, Controls and Displays (Cont).

CONTROL OR DISPLAY	FUNCTION/DESCRIPTION
DME format	Channel 1 DME data from both DME transceivers is digitally displayed in the center section of the indicator in two data columns. Column 1 shows number 1 (left side) DME parameters; column 2 shows number 2 (right side) DME parameters. Bearing pointers (when selected) are only partially displayed, so the DME data is not overwritten.
Format annunciator	"DME" annunciates in the upper left of the screen when DME format is selected.
Ident/freq display	The ident/freq display line shows the DME ident codes of the tuned stations. If a valid ident is not available, the DME frequency is displayed. If DME hold is selected, the ident/frequency is replaced with a boxed "HOLD" annunciation.
Distance display	The distance display line shows the computed DME distance (in nautical miles) to the tuned stations. If DME data is invalid, the distance display is replaced by a boxed DME fail annunciation.
Single-bar bearing pointer	A single-bar pointer may be selected for display. The pointer head and reciprocal tail indicate the bearing to a selected NAV station.
Single-bar bearing pointer source knob and annunciator	Rotate the lower left knob to display the bearing pointer and select the NAV source which drives the pointer. The selected source and a pointer icon annunciate near the knob. If a localizer frequency is tuned while VOR bearing is displayed, LOC 1 annunciates and the pointer is removed. If valid bearing data is not available, the pointer is not displayed.
Dual-bar bearing pointer	A dual-bar pointer may be selected for display. The pointer head and reciprocal tail indicate the bearing to a selected NAV station.
Dual-bar bearing pointer source knob and annunciator	Rotate the lower right knob to display the bearing pointer and select the NAV source which drives the pointer. The selected source and a pointer icon annunciate near the knob. If a localizer frequency is tuned while VOR bearing is displayed, LOC 2 annunciates and the pointer is removed. If valid bearing data is not available, the pointer is not displayed.

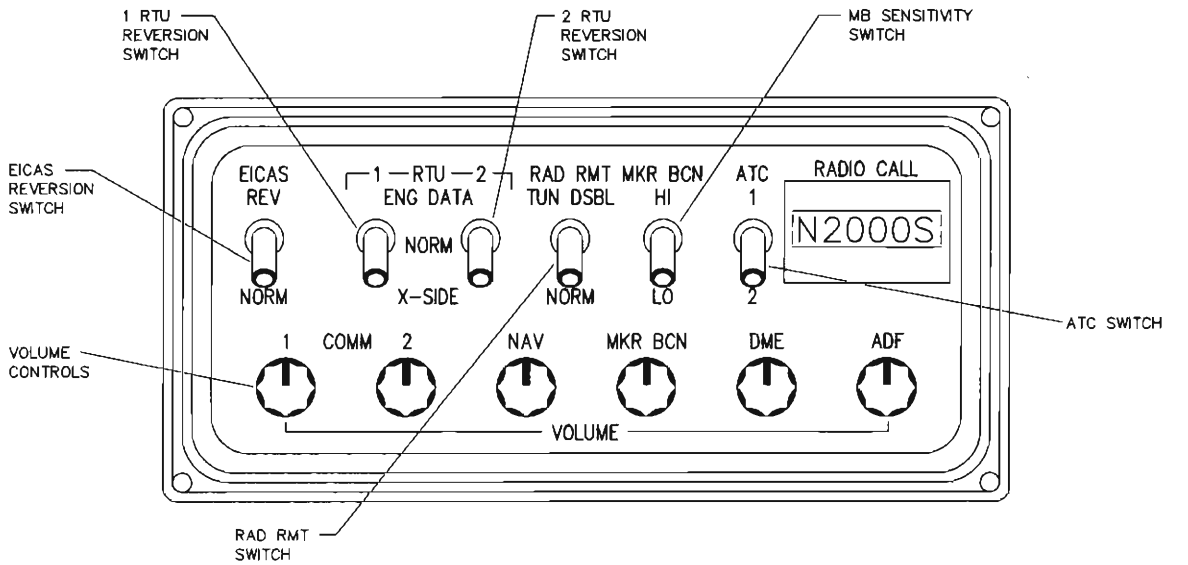

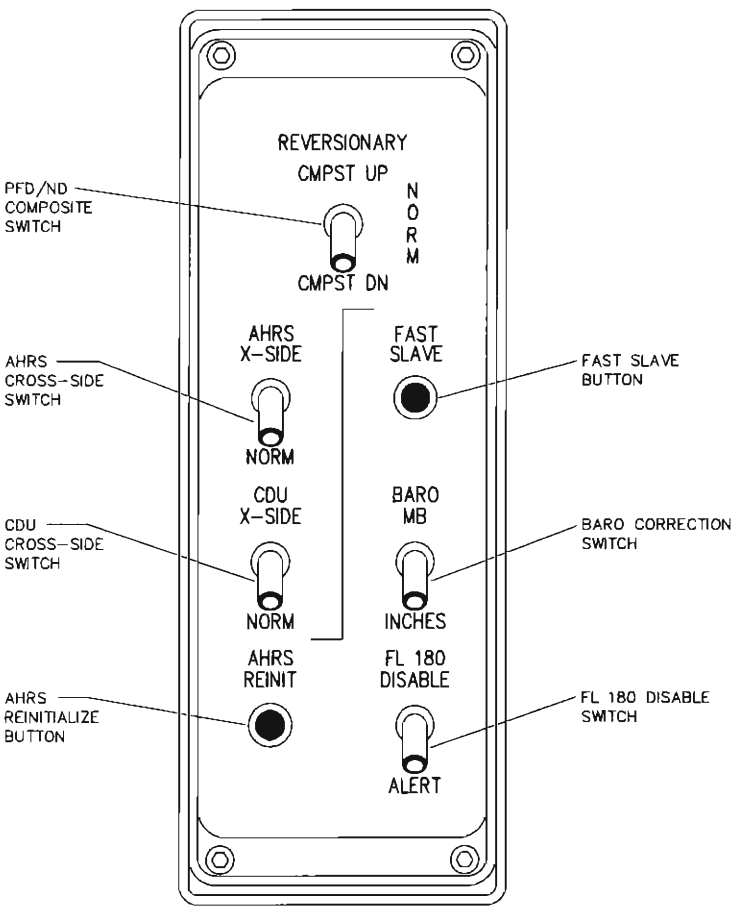

CGO-0222-01-AC-0

Reversionary Switching Panels, Controls
Figure 3-14

Table 3-14. Reversionary Switching Panels, Controls.

CONTROL	FUNCTION/DESCRIPTION
Center panel	The center reversionary switching panel is located above the RTU's. This panel selects EICAS and RTU reversion functions, radio remote tune disable, marker beacon sensitivity, the active transponder, and individual audio levels.
EICAS reversion switch	The EICAS toggle switch selects NORM or REV function. At the NORM position, the ECD displays EICAS data. At the REV position, EICAS data is displayed on the MFD, and the ECD is blanked. REV function is selected if the ECD fails.
1 RTU reversion switch	The 1 RTU toggle switch selects NORM, ENG DATA, or X-SIDE functions for the left RTU. At the NORM position, the RTU controls the COM, NAV, ADF, and ATC (if selected) radios. At the ENG DATA position, the RTU displays engine data (refer to figure 3-12, sheet 6). At the X-SIDE position, the RTU is blanked.
2 RTU reversion switch	The 2 RTU toggle switch selects NORM, ENG DATA, or X-SIDE functions for the right RTU. Operation is as described above.
RAD RMT switch	The RAD RMT toggle switch selects NORM or TUN DSBL function. At the NORM position, the RTU's accept tune words from the IAPS. This allows the CDU's to remote tune the radios, and enables the FMS autotune function. At the TUN DSBL position, the RTU's ignore remote tune words.
MB sensitivity switch	The MKR BCN toggle switch selects HI or LO sensitivity for both marker beacon receivers (part of VIR radio).
ATC switch	The ATC toggle switch enables 1 of the 2 TDR transponders. Only one transponder may be active at a time. The selected transponder is controlled by the on-side RTU (unless the RTU is in a reversionary mode).
Volume controls	A row of VOLUME knobs independently adjust the audio output levels of the COMM 1, COMM 2, NAV, MKR BCN, DME, and ADF receivers.
Side panel	A side reversionary switching panel is located on both the left and right ends of the instrument panel. Each panel controls on-side PFD/ND reversion functions, AHRS reset functions, and ALI control functions.
PFD/ND composite switch	The REVERSIONARY toggle switch selects NORM, CMPST UP, or CMPST DN functions. At the NORM position, the PFD displays ADI information and the ND displays HSI information. At the CMPST UP position, the PFD displays a composite PFD/ND pictorial (refer to figure 3-10, sheets 7/8) and the ND is blanked. At the CMPST DN position, the ND displays the composite PFD/ND pictorial and the PFD is blanked. The composite function is selected if the ND or PFD fails.
AHRS cross-side switch	The AHRS toggle switch selects NORM or X-SIDE attitude/heading source data. At the NORM position, the PFD displays on-side attitude and the ND displays on-side heading. At the X-SIDE position, the PFD and ND display cross-side attitude and heading.
CDU cross-side switch	The CDU toggle switch selects NORM or X-SIDE control source data. At the NORM position, the PFD and ND are controlled by the on-side CDU. At the X-SIDE position, the PFD and ND are controlled by the cross-side CDU.
AHRS reinitialize button	Press the AHRS REINIT button to reinitialize the AHC attitude/heading computer.
Fast slave button	Press the FAST SLAVE button to force the AHC to fast-slave to the FDU heading.
Baro correction switch	The BARO toggle switch selects MB or INCHES barometric pressure correction format (displayed on ALI). At the MB position, the correction format is in millibars. At the INCHES position, correction format is in inches of mercury.
FL 180 disable switch	The FL 180 toggle switch selects DISABLE or ALERT flight level 180 status. At the ALERT position, the ALI barometric display flashes at 18,000 feet altitude. At the DISABLE position, this alert is cancelled or inhibited.

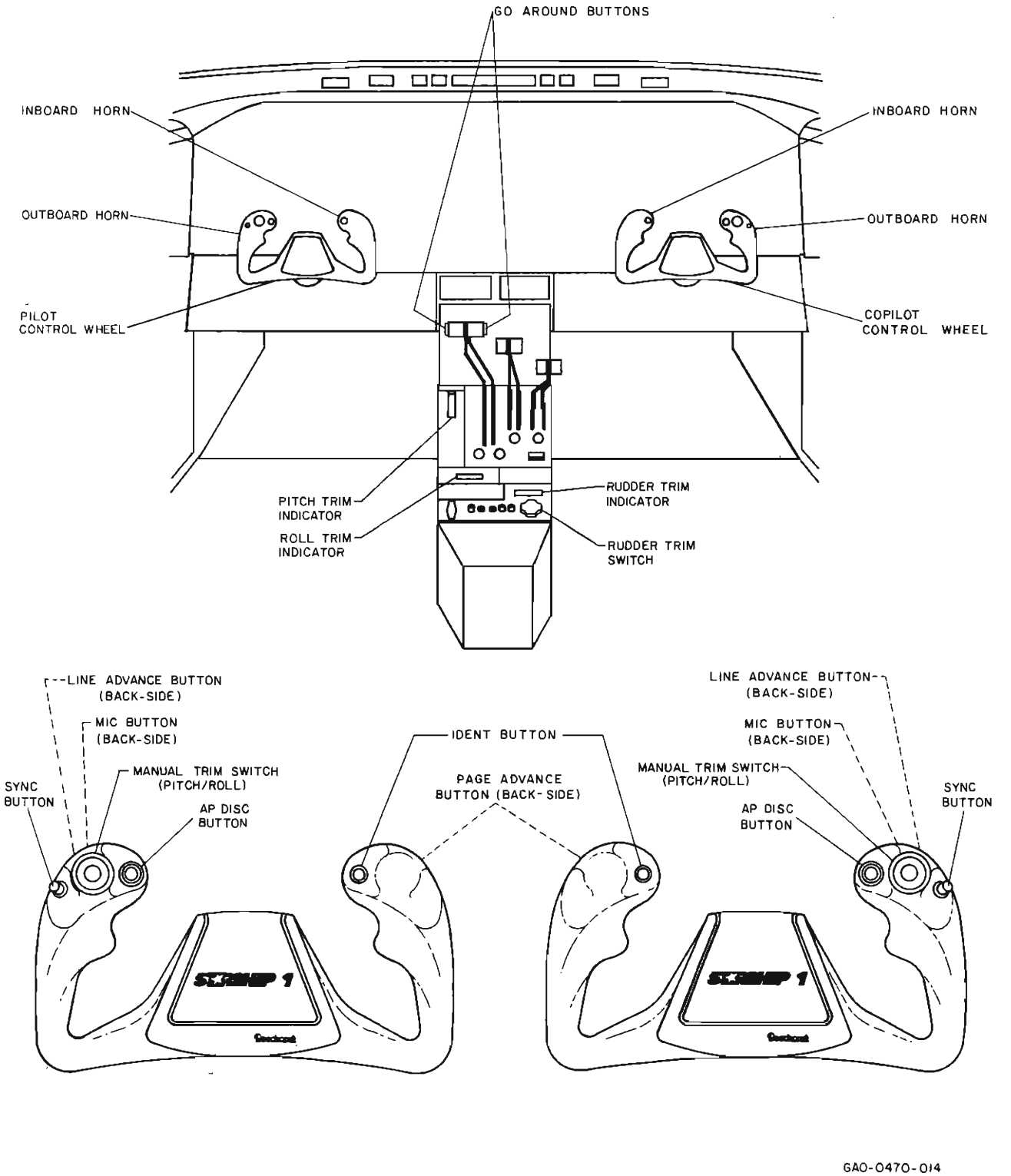

Cockpit Switches, Controls
Figure 3-15

Table 3-15. Cockpit Switches, Controls.

CONTROL	FUNCTION/DESCRIPTION
Go around buttons	The GA buttons are located on either side of the throttle handle. Press either GA button to disengage the autopilot (but not the yaw damper) and clear all flight guidance modes. The aircraft then flies fixed pitch-up, heading-hold commands.
Rudder trim switch	The rudder trim switch is a slide/turn knob. Operate the trim switch to disengage the yaw damper and apply manual rudder trim command.
Trim indicators	The pitch, roll, and rudder trim indicators are located on the pedestal. Each indicator contains center and directional markings which indicate the amount of trim in that axis.
Control wheels	The pilot and copilot control wheels contain identical switches, but in mirror image locations. The following description applies to both control wheels.
Inboard horn	The inboard horn of each control wheel is the grip toward the center of the aircraft.
Ident button	Press the IDENT button to cause the transponder to transmit an ATC identification pulse.
Page advance button	The PAGE ADV button is used when a checklist is displayed on the MFD. Press the PAGE ADV button to exit the displayed checklist, and select the next checklist on the NORMAL (or ABNORMAL) PROCEDURE menu page.
Outboard horn	The outboard horn of each control wheel is the grip toward the nearest side of the aircraft.
AP DISC button	Press the AP DISC button to disengage the autopilot and yaw damper. Press this button again to cancel the flashing and aural disengage warnings.
MIC button	Press the MIC button to key the COM transceiver to transmit voice communication.
Line advance button	The LINE ADV button is used when a checklist is displayed on the MFD. Press the LINE ADV button to check the cursored line, and scroll down one line on the page.
Manual trim switch	The manual trim switch consists of a pushbutton enable, and directional slide controls. Operate either trim switch to disengage the autopilot (but not the yaw damper) and apply manual pitch or roll trim command. Push the trim switch and slide forward to apply nose-down trim. Push and slide backward to apply nose-up trim. Push and slide right to apply roll-right trim. Push and slide left to apply roll-left trim.
SYNC button	Press the SYNC button (on the uncoupled side) to synchronize flight director vertical and lateral references to those currently being flown.

Rockwell International

Starship 1 Avionics System

theory of operation

Collins General Aviation Division

Printed in USA

•523-0774079-001118
1st Edition, 14 January 1989

table of contents

Paragraph		*Page*
4.1	***Introduction***	4-1
4.2	***Overview***	4-1
4.2.1	Bus Types	4-1
4.2.2	LRU Mating Connector Pin Locations	4-1
4.2.3	Block Diagram	4-1
4.3	***Theory of Operation***	4-5
4.3.1	IDS (Instrument Display System)	4-8
4.3.2	IAPS (Integrated Avionics Processor System)	4-54
4.3.3	ADS (Air Data System)	4-70
4.3.4	AHS (Attitude Heading System)	4-90
4.3.5	FCS (Flight Control System)	4-102
4.3.6	FMS (Flight Management System)	4-126
4.3.7	CS (Communication System)	4-148
4.3.8	NS (Navigation System)	4-166
4.3.9	WXR (Weather Radar System)	4-188
4.3.10	ADAS (Aircraft Data Acquisition System)	4-196

List of Effective Pages

*The asterisk indicates pages changed, added, or deleted by the current change.

Page No	Issue
Title	14 Jan 89
List of Effective Pages	14 Jan 89
4-1 thru 4-51	14 Jan 89
4-52 Blank	14 Jan 89
4-53 thru 4-67	14 Jan 89
4-68 Blank	14 Jan 89
4-69 thru 4-87	14 Jan 89
4-88 Blank	14 Jan 89
4-89 thru 4-99	14 Jan 89
4-100 Blank	14 Jan 89
4-101 thru 4-123	14 Jan 89
4-124 Blank	14 Jan 89
4-125 thru 4-145	14 Jan 89
4-146 Blank	14 Jan 89
4-147 thru 4-151	14 Jan 89
4-152 Blank	14 Jan 89
4-153 thru 4-163	14 Jan 89
4-164 Blank	14 Jan 89
4-165 thru 4-185	14 Jan 89
4-186 Blank	14 Jan 89
4-187 thru 4-193	14 Jan 89
4-194 Blank	14 Jan 89
4-195 thru 4-214	14 Jan 89

Record of Revisions

RETAIN THIS RECORD IN THE FRONT OF MANUAL.
ON RECEIPT OF REVISIONS, INSERT REVISED PAGES IN THE MANUAL, AND ENTER DATE INSERTED AND INITIALS.

REV NO	REVISION DATE	INSERTION DATE/BY	SB NUMBER INCLUDED	REV NO	REVISION DATE	INSERTION DATE/BY	SB NUMBER INCLUDED
1st Ed	14 Jan 89		None				

section IV
theory of operation

4.1 INTRODUCTION

This section provides a system-level explanation of how the Starship 1 Avionics System operates. Several pages of schematic representation show two levels of cross-indexed block diagrams, all interconnections, and the interface paths for all controls and displays.

4.2 OVERVIEW

4.2.1 Bus Types

The various LRU's in the system interface with each other using several 2-wire digital data buses. Each bus has a unique name. The buses are primarily ARINC 429 format, with some private RS-422 buses and an ARINC 453 (radar) bus. Table 4-1 lists each digital bus and the corresponding bus type.

4.2.2 LRU Mating Connector Pin Locations

Figure 4-12 (located at the end of this section) shows the mating connectors for each (non-IAPS) LRU. Pin numbering is specified to aid troubleshooting effort. This pictorial is presented in this section to complement the system schematic diagrams, which contain system interconnect information as well as detailed block diagrams.

4.2.3 Block Diagram

An overall block diagram of the Starship 1 Avionics System is provided in figure 4-1. The following paragraphs describe the signal flow between LRU's in the system.

The IAPS is the central item in the block diagram. The ICC-850A IAPS card cage contains four independent PWR-851A power supplies, four IOC-851 input/output data concentrators, the flight control computers, and the flight management computers. Eventually, all pertinent avionics system data is put onto a digital data bus and input to the IAPS for processing and distribution to appropriate units (critical AHS and ADS data is also applied directly to the displays).

The PWR-851A modules independently power the left flight control computer, right flight control computer, left flight management computer, right CDU coupler (installed instead of a right flight management computer), and the data concentrators.

The four IOC-851 input/output data concentrators receive inputs from the left and right side air data computers, attitude/heading computers, com/nav/pulse radios, the six large displays, the radio altimeter, and the data acquisition unit. Processed IOC-851 output is supplied to all six large displays, the weather radar assembly, the sensor display driver, the radio tuning units, the primary com/nav radios, the air data computers, the data acquisition unit, and the cabin display unit. The IOC's communicate with the flight control and flight management computers within the IAPS card cage.

The upper portion of the block diagram shows the panel mounted LRU's, positioned approximately as they would be in the instrument panel. The six large color displays are the PFD-870 (quantity 2), ND-870 (quantity 2), ECD-870, and the MFD-870. Each PFD-870 (ADI display) receives inputs from both left and right attitude/heading computers, and from each of the input/output concentrators (in the IAPS). Each PFD-870 returns a bus back to the left or right pair of input/output concentrators (IAPS).

Each ND-870 (HSI display) receives inputs from both left and right attitude/heading computers, from each of the input/output concentrators, and from the weather radar assembly. Each ND-870 returns a bus back to the left or right pair of input/output concentrators.

The ECD-870 (EICAS display) receives inputs from both left and right channels of the data acquisition unit, and from each of the input/output concentrators. The ECD-870 returns a bus back to the left pair of input/output concentrators, and to both channels of the data acquisition unit.

The MFD-870 (page/map display) receives inputs from both left and right channels of the data acquisition unit, from the flight management computer,

from each of the input/output concentrators, from the weather radar assembly, and from the joystick on the CHP-850 Course/Heading Panel. The MFD-870 returns a bus back to the right pair of input/output concentrators, and to both channels of the data acquisition unit.

The SDU-640A is a monochrome display in the lower-left portion of the panel. An optional second SDU-640A may be located in the lower-right area of the panel. Each unit provides an RMI function and receives drive from the SDD-640. The SDD-640 is a 2-channel processor that receives inputs from the left side nav radios, from the right side nav radios, from both attitude/heading computers, and from a left and a right input/output concentrator (IAPS). Each channel of the sensor display driver provides drive for one sensor display unit.

The ASI-850A and the ALI-850A are air data displays located on either side of each PFD-870. Each ADC-850 computer applies a data bus output to onside ASI/ALI instruments. The ASI-850A Airspeed Indicator transmits button/knob settings to the ALI-850A Altitude Indicator, where they are transmitted along with the ALI control settings to the air data computer.

The ADC-850 also receives data from the appropriate side input/output concentrator (IAPS), and from the cross-side ADC computer. The ADC-850 provides outputs to the left or right attitude/heading computer, the left or right side input/output concentrators, and to the cross-side ADC-850 computer (in addition to the ASI/ALI data bus output).

The left and right RTU-870A's are the primary radio controls. Each RTU-870A receives an input bus from both of the onside input/output concentrators (IAPS), both left and right engine data concentrators (to display engine data in reversionary mode), and one cross-side input/output concentrator. Each RTU-870A provides a tune bus output to both the left and right side com/nav/pulse radios.

The VHF-422A COM Transceiver, VIR-432 VHF NAV Receiver, DME-442 DME Transceiver, ADF-462 Automatic Direction Finder, and the CAD-870 Transponder Adapter can be tuned by the onside RTU-870A or the cross-side RTU-870A (in reversion mode). The left VHF-422A and VIR-432 may also be burst tuned by a bus from the IAPS. The output of these com/nav/pulse radios is applied to the IAPS; nav output is also applied to the sensor display driver. Audio output is applied to the aircraft audio system. The CAD-870 is an adapter which allows the TDR-90 transponder to communicate with an otherwise ARINC portion of the system. The CMA-764 VLF NAV Receiver is tuned from either side of the IAPS, and outputs a bus to both the IAPS and the sensor display driver.

The MSP-850A panels provide flight guidance mode selection for the FCC-850 Flight Control Computers (resident in the IAPS card cage). The FCC-850 then returns an interlock which lights a button annunciator. The APP-85D (located in the aircraft pedestal) inputs autopilot control selection to both flight control computers. The computers then independently calculate command outputs, and together apply redundancy monitored servo drive to the elevator servo, aileron servo, rudder servo, and pitch trim system. Flight director commands and autopilot status are applied to the PFD-870 and to the ND-870 (for composite display). The ATC-81 generates arm and command outputs to the roll/yaw trim system.

Each CDU-850A is the primary controller for the PFD-870 and the ND-870 displays, the weather radar assembly, and the flight management system. The CDU-850A can also tune the nav/com/pulse radios. Inputs to each CDU-850A include ALT/MDA from the appropriate AAP-850, course and heading selection from the CHP-850, and a data bus input from the left flight management computer or right CDU coupler. The CDU-850A output bus is applied to the left FMS computer or right CDU coupler.

The left flight management computer is the FMC-851A and FMC-852A (contains DBU-850 interface); these two modules are located in the IAPS and function together as one computer. The CDC-850A control display coupler is located in the IAPS, and is installed instead of a second FMS computer. The flight management computer (or coupler) receives an input bus from its cross-side CDC/FMC counterpart and from each of the four input/output concentrators (IAPS). The flight management computer (or coupler) provides an output bus to its cross-side counterpart, the onside CDU-850A, both onside input/output concentrators, and to the MFD-870 (FMC only).

The RTA-854 is a complete weather radar system. The weather radar control words originate from the CDU-850A's, and are applied through computers and concentrators in the IAPS to the RTA-854. The WXR video output is applied to both ND-870's and to the MFD-870.

Each AHC-85D Attitude/Heading Computer functions as a vertical gyro, a directional gyro, and a 3-axis rate/acceleration sensor. The applicable FDU-70 provides flux measurement input, and the onside ADC-850 provides TAS data input to each attitude heading computer. The output of each AHC-85D is applied to both PFD-870's, both ND-870's, the sensor display driver, and to both onside input/output concentrators (IAPS).

The ALT-55B radio altimeter computes the aircraft altitude above ground (up to 2500 feet) using a transmit ANT-52 antenna and a receive ANT-52 antenna. The altimeter performs all computations and provides an analog dc altitude output to the RAC-870. The RAC-870 converts this dc signal to ARINC format, and applies it to both of the left-side input/output concentrators (IAPS).

The DAU-850 Data Acquisition Unit processes engine data and numerous aircraft data discretes for use by the IAPS processors and for display on the ECD-870 (or MFD-870 in reversion mode). The DAU-850 contains two identical channels. Each channel receives engine data from both of the EDC-850 Engine Data Concentrators, time from an ARINC-429 clock, discrete data from aircraft systems, caution/warn data from the ECD-870 and the MFD-870, and input from both left and right input/output concentrators (IAPS). The EDC-850's gather left or right engine discretes and encode them onto an ARINC output bus; this bus is applied to both channels of the DAU-850, as well as to the RTU-870A's for display in reversionary mode. The ARINC-429 clocks allow the DAU-850 to report time-of-day with data readings. The DAU-850 applies discrete caution/warn and aural warn outputs to aircraft systems, as well as data bus outputs to the ECD-870, MFD-870, and all four input/output concentrators (IAPS).

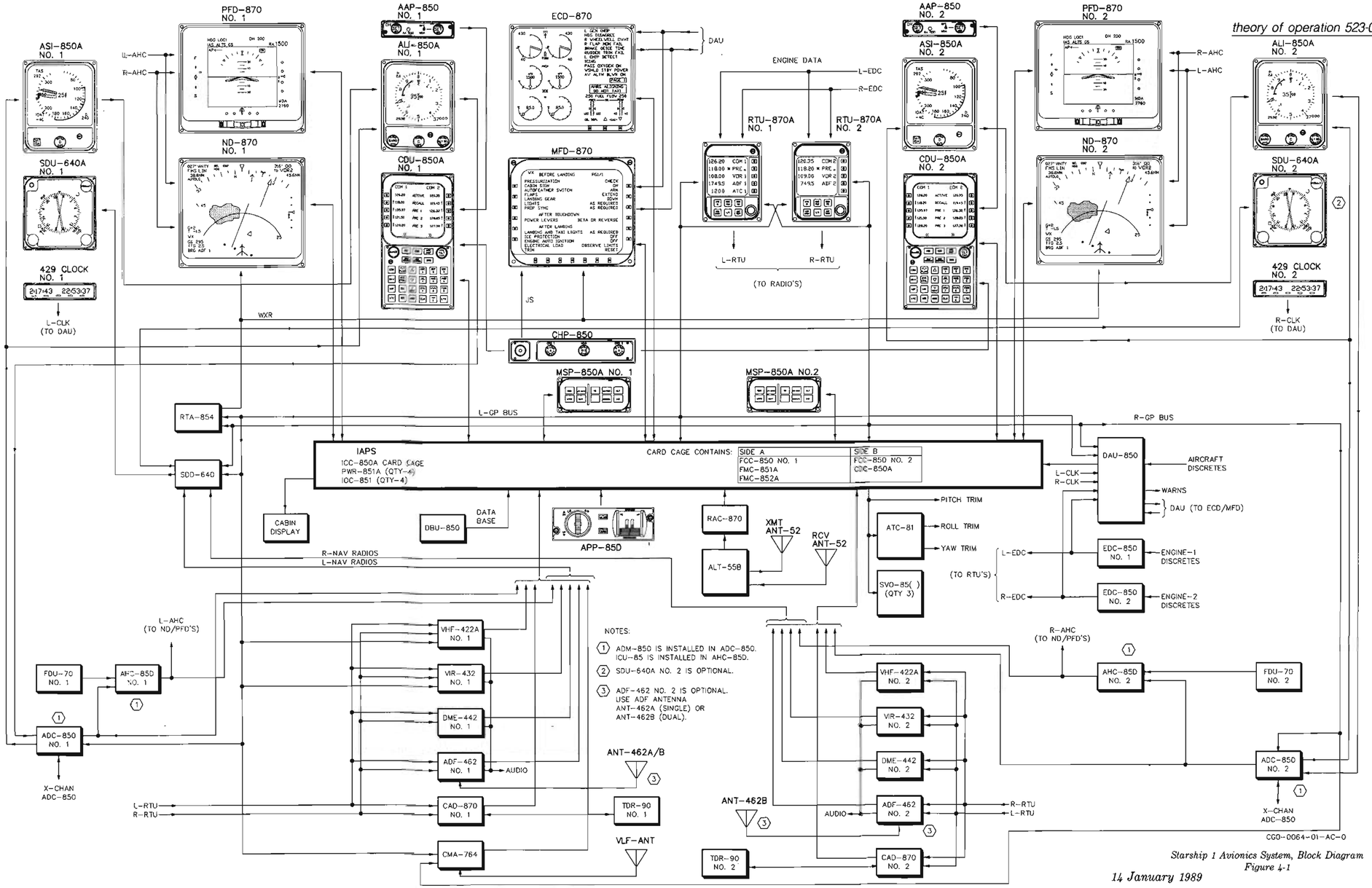

Starship 1 Avionics System, Block Diagram
Figure 4-1

Table 4-1. Digital Bus Nomenclature and Type.

BUS NAME	TYPE	BUS NAME	TYPE
L-ADC-1	ARINC 429 LOW-SPEED	L-FMS-2	ARINC 429 HIGH-SPEED
L-ADC-2	ARINC 429 LOW-SPEED	R-FMS-2	Not used
L-ADC-3	ARINC 429 LOW-SPEED	L-FMS-3	RS-422 (CDU)
ADC XTLK	RS-422 (left/right)	R-FMS-3	RS-422 (CDU)
R-ADC-1	ARINC 429 LOW-SPEED	L-FMS-4	RS-422 (xtlk)
R-ADC-2	ARINC 429 LOW-SPEED	R-FMS-4	RS-422 (xtlk)
R-ADC-3	ARINC 429 LOW-SPEED	LA-GP BUS 1	ARINC 429 LOW-SPEED
L-ADF-1	ARINC 429 LOW-SPEED	RA-GP BUS 1	ARINC 429 LOW-SPEED
L-ADF-2	ARINC 429 LOW-SPEED	LB-GP BUS 2	ARINC 429 LOW-SPEED
R-ADF-1	ARINC 429 LOW-SPEED	RB-GP BUS 2	ARINC 429 LOW-SPEED
R-ADF-2	ARINC 429 LOW-SPEED	LB-GP BUS 3	ARINC 429 LOW-SPEED
L-AHC-1	ARINC 429 HIGH-SPEED	RB-GP BUS 3	ARINC 429 LOW-SPEED
L-AHC-2	ARINC 429 HIGH-SPEED	LA-IOC-1	ARINC 429 HIGH-SPEED
L-AHC-3	ARINC 429 HIGH-SPEED	LB-IOC-1	ARINC 429 HIGH-SPEED
R-AHC-1	ARINC 429 HIGH-SPEED	RA-IOC-1	ARINC 429 HIGH-SPEED
R-AHC-2	ARINC 429 HIGH-SPEED	RB-IOC-1	ARINC 429 HIGH-SPEED
R-AHC-3	ARINC 429 HIGH-SPEED	LA-IOC-3	ARINC 429 HIGH-SPEED*
L-ALI-OUT	RS-422	LB-IOC-3	ARINC 429 HIGH-SPEED*
R-ALI-OUT	RS-422	RA-IOC-3	ARINC 429 HIGH-SPEED*
CABIN DSPL	ARINC 429 LOW-SPEED	RB-IOC-3	ARINC 429 HIGH-SPEED*
L-CAD-1	ARINC 429 LOW-SPEED	LA-IOC-4	ARINC 429 HIGH-SPEED*
R-CAD-1	ARINC 429 LOW-SPEED	LB-IOC-4	ARINC 429 HIGH-SPEED*
L-CDU-1	RS-422	RA-IOC-4	ARINC 429 HIGH-SPEED*
R-CDU-1	RS-422	RB-IOC-4	ARINC 429 HIGH-SPEED*
CLK-1	ARINC 429 LOW-SPEED	MFD-1	ARINC 429 LOW-SPEED
CLK-2	ARINC 429 LOW-SPEED	MSP TO FCC-A	RS-422
A-DAU-1	ARINC 429 HIGH-SPEED	MSP TO FCC-B	RS-422
A-DAU-2	ARINC 429 LOW-SPEED	L-ND-1	ARINC 429 LOW-SPEED
B-DAU-1	ARINC 429 HIGH-SPEED	R-ND-1	ARINC 429 LOW-SPEED
B-DAU-2	ARINC 429 LOW-SPEED	L-PFD-1	ARINC 429 LOW-SPEED
L-DME-1	ARINC 429 LOW-SPEED	R-PFD-1	ARINC 429 LOW-SPEED
L-DME-2	ARINC 429 LOW-SPEED	L-RAC-1	ARINC 429 LOW-SPEED
R-DME-1	ARINC 429 LOW-SPEED	L-RTU-1	ARINC 429 LOW-SPEED
R-DME-2	ARINC 429 LOW-SPEED	L-RTU-2	ARINC 429 LOW-SPEED
ECD-1	ARINC 429 LOW-SPEED	R-RTU-1	ARINC 429 LOW-SPEED
L-EDC-1	ARINC 429 LOW-SPEED	R-RTU-2	ARINC 429 LOW-SPEED
L-EDC-2	ARINC 429 LOW-SPEED	SDD TO SDU-1	ARINC 429 LOW-SPEED
R-EDC-1	ARINC 429 LOW-SPEED	SDD TO SDU-2	ARINC 429 LOW-SPEED
R-EDC-2	ARINC 429 LOW-SPEED	L-VHF-1	ARINC 429 LOW-SPEED
L-FCC-1	ARINC 429 HIGH-SPEED*	R-VHF-1	ARINC 429 LOW-SPEED
R-FCC-1	ARINC 429 HIGH-SPEED*	L-VIR-1	ARINC 429 LOW-SPEED
FCC XCHAN	RS-422 (left/right)	L-VIR-2	ARINC 429 LOW-SPEED
FCC TO MSP-A	RS-422	R-VIR-1	ARINC 429 LOW-SPEED
FCC TO MSP-B	RS-422	R-VIR-2	ARINC 429 LOW-SPEED
L-FMS-1	ARINC 429 HIGH-SPEED*	L-VLF-1	ARINC 429 LOW-SPEED
R-FMS-1	ARINC 429 HIGH-SPEED*	L-VLF-2	ARINC 429 LOW-SPEED
		WXT-1	ARINC 453 VERY HIGH-SPEED

*Modified bus; internal to IAPS.

NOTE: Most units report maintenance information (in a diagnostic word) to the built-in diagnostic system. No reference to these diagnostic words is made in this section; refer to the maintenance section of this manual for diagnostic information.

4.3 THEORY OF OPERATION

The Starship 1 Avionics System consists of ten subsystems. Figures 4-2 through 4-11 provide an overview and then a system schematic for each of the ten subsystems. Each figure is presented in view-cell sized image area, to facilitate use in other documentation and as an aid in customer training. Applicable figures show signal paths from operating controls (knobs, pushbuttons, etc) to the resulting indication (displays, aircraft control surfaces, etc).

Figures are numbered to quickly identify a drawing as a system overview or a system schematic (level 1 detail). This numbering technique is illustrated below.

Figure 4-X	System Overview	Contains broad scope; shows the units in a system and the other systems it interfaces with.
Figure 4-X-1	System Schematic (level 1 detail)	Shows a schematic representation of each unit in a system; all aircraft wiring (including pin numbering) is shown for each unit and interfacing system; depth of coverage is tailored to the aircraft flight-line maintenance level.

Note that the system schematics are not intended to replace bench level repair coverage. Component level coverage is provided in the applicable repair manual.

Heavy solid black borders identify all system units. Slashed border outlines identify the interfacing systems. All boxes with slashed borders contain a figure number reference that directs the reader to a set of drawings which show the interfacing system in similar detail. A list of illustrations is provided in table 4-2. An index that references each unit to the applicable figure is provided in table 4-3.

Table 4-2. List of Illustrations.

FIGURE	TITLE
4-1	Starship 1 Avionics System, Block diagram
4-2	IDS (Instrument Display System) Overview
4-2-1	IDS System Schematic
4-3	IAPS (Integrated Avionics Processor System) Overview
4-3-1	IAPS System Schematic
4-4	ADS (Air Data System) Overview
4-4-1	ADS System Schematic
4-5	AHS (Attitude Heading System) Overview
4-5-1	AHS System Schematic
4-6	FCS (Flight Control System) Overview
4-6-1	FCS System Schematic
4-7	FMS (Flight Management System) Overview
4-7-1	FMS System Schematic
4-8	CS (Communication System) Overview
4-8-1	CS System Schematic
4-9	NS (Navigation System) Overview
4-9-1	NS System Schematic
4-10	WXR (Weather Radar System) Overview
4-10-1	WXR System Schematic
4-11	ADAS (Aircraft Data Acquisition System) Overview
4-11-1	ADAS System Schematic
4-12	LRU Mating Connectors

Table 4-3. Unit to Figure Number Index.

UNIT	TITLE	QTY	FIGURE NUMBER
	IDS		
PFD-870	Primary Flight Display	2	4-2
ND-870	Navigation Display	2	
ECD-870	Engine/Caution Display	1	
MFD-870	Multifunction Display	1	
SDU-640A	Sensor Display Unit	1 or 2	
SDD-640	Sensor Display Driver	1	
	IAPS		
ICC-850A	IAPS Card Cage	1	4-3
PWR-851A	IAPS Power Supply	4	
IOC-851	I/O Concentrator	4	
	ADS		
ADC-850	Air Data Computer	2	4-4
ADM-850	Air Data Module	2	
ASI-850A	Airspeed Indicator	2	
ALI-850A	Altitude Indicator	2	
	AHS		
AHC-85D	Attitude Heading Computer	2	4-5
ICU-85	Internal Compensation Unit	2	
FDU-70	Flux Detector Unit	2	
	FCS		
MSP-850A	Mode Select Panel	2	4-6
APP-85D	Autopilot Panel	1	
FCC-850	Flight Control Computer	2	
SVO-85A	Aileron Servo	1	
SVO-85B	Rudder Servo	1	
SVO-85C	Elevator Servo	1	
ATC-81	Automatic Trim Coupler	1	
	FMS		
CDU-850A	Control Display Unit	2	4-7
CHP-850	Course/Heading Panel	1	
AAP-850	Altitude Awareness Panel	2	
DBU-850	Data Base Unit	1	
FMC-851A	Flight Management Computer	1	
FMC-852A	Navigation Computer	1	
CDC-850A	Control Display Coupler	1	
	CS		
VHF-422A	VHF Comm Transceiver	2	4-8
RTU-870A	Radio Tuning Unit	2	
TDR-90	Transponder	2	
CAD-870	Transponder Adapter	2	
	NS		
VIR-432	VHF Navigation Receiver	2	4-9
DME-442	DME Transceiver	2	
ADF-462	ADF Receiver	1 or 2	
ANT-462A	ADF Antenna (Single)	1	
	or		
ANT-462B	ADF Antenna (Dual)	1	
ALT-55B	Radio Altimeter	1	
ANT-52	Radio Altimeter Antenna	2	
RAC-870	Radio Altitude Converter	1	

Table 4-3. Unit to Figure Number Index (Cont).

UNIT	TITLE	QTY	FIGURE NUMBER
	NS (Cont)		
CMA-764	VLF/Omega Receiver	1	
VLF-ANT	Antenna Coupler	1	
	WXR		
RTA-854	Receiver/Transmitter/Antenna	1	4-10
	ADAS		
EDC-850	Engine Data Concentrator	2	4-11
DAU-850	Data Acquisition Unit	1	

NOTE: Figure 4-12 shows rear connector pin locations for each non-IAPS unit.

4.3.1 IDS (Instrument Display System)

4.3.1.1 Overview

The IDS contains the six large displays, the sensor display(s), and the sensor display driver. Refer to figure 4-2. Each LRU is described below:

PFD-870 No. 1 Primary Flight Display (EADI) on pilot side
ND-870 No. 1 Navigation Display (EHSI) on pilot side
ECD-870 Engine/Caution Display (EICAS)
MFD-870 Multifunction Display
PFD-870 No. 2 Primary Flight Display (EADI) on copilot side
ND-870 No. 2 Navigation Display (EHSI) on copilot side
SDD-640 Sensor Display Driver
SDU-640A No. 1 Sensor Display Unit (RMI) on pilot side
SDU-640A No. 2 Sensor Display Unit (RMI) on copilot side (optional)

The PFD-870 No. 1 is the electronic ADI on the pilot side of the instrument panel. The PFD receives data bus inputs from the four input/output concentrators (IAPS) and from both attitude heading computers (AHS). The PFD provides a data bus output to the IAPS.

The ND-870 No. 1 is the electronic HSI on the pilot side of the instrument panel. The ND receives data bus inputs from the four input/output concentrators (IAPS), from both attitude heading computers (AHS), and from the weather radar system (WXR). The ND provides a data bus output to the IAPS.

Switches on one of the reversionary panels allow the pilot to select the following PFD/ND conditions: NORM or AHRS X-SIDE attitude heading inputs, NORM or CDU X-SIDE mode/control functions, and CMPST UP/NORM/CMPST DN composite display.

The ECD-870 is the electronic engine data and engine caution display. The ECD receives data bus inputs from the four input/output concentrators (IAPS) and from both channels of the data acquisition unit (ADAS). The ECD provides a data bus output to the IAPS.

The MFD-870 is the electronic multifunction display. The MFD receives data bus inputs from the four input/output concentrators (IAPS), from both channels of the data acquisition unit (ADAS), from the flight management computer (FMS, inside IAPS), and from the weather radar system (WXR). The MFD provides a data bus output to the IAPS.

A switch on the center reversionary panel allows the pilot or copilot to send EICAS information to either the ECD (NORM) or the MFD (EICAS REV) display. Yoke mounted LADV and PADV switches provide line advance and page advance selection for the MFD.

The PFD-870 No. 2 is the electronic ADI on the copilot side of the instrument panel. The PFD receives data bus inputs from the four input/output concentrators (IAPS) and from both attitude heading computers (AHS). The PFD provides a data bus output to the IAPS.

The ND-870 No. 2 is the electronic HSI on the copilot side of the instrument panel. The ND receives data bus inputs from the four input/output concentrators (IAPS), from both attitude heading computers (AHS), and from the weather radar system (WXR). The ND provides a data bus output to the IAPS.

Switches on one of the reversionary panels allow the copilot to select the following PFD/ND conditions: NORM or AHRS X-SIDE attitude heading inputs, NORM or CDU X-SIDE mode/control functions, and CMPST UP/NORM/CMPST DN composite display.

The SDD-640 gathers compass and navigation data, and then processes this data into drive to the display units. The left channel of the SDD receives data bus inputs from the left VIR, DME, VLF, and ADF radios (NAV), from one of the left input/output concentrators (IAPS), and from the right side attitude heading computer (AHS). The right channel of the SDD receives data bus inputs from the right VIR, DME, and ADF (optional) radios (NAV), from one of the right input/output concentrators (IAPS), and from the left side attitude heading computer (AHS). The SDD provides a data bus output to both display units.

The SDU-640A is an electronic RMI display. A second SDU-640A may be installed on the copilot side of the instrument panel. The SDU receives a data bus input from the left or right channel of the display driver. If an internal failure is sensed, the SDU sets the fail discrete output to the SDD.

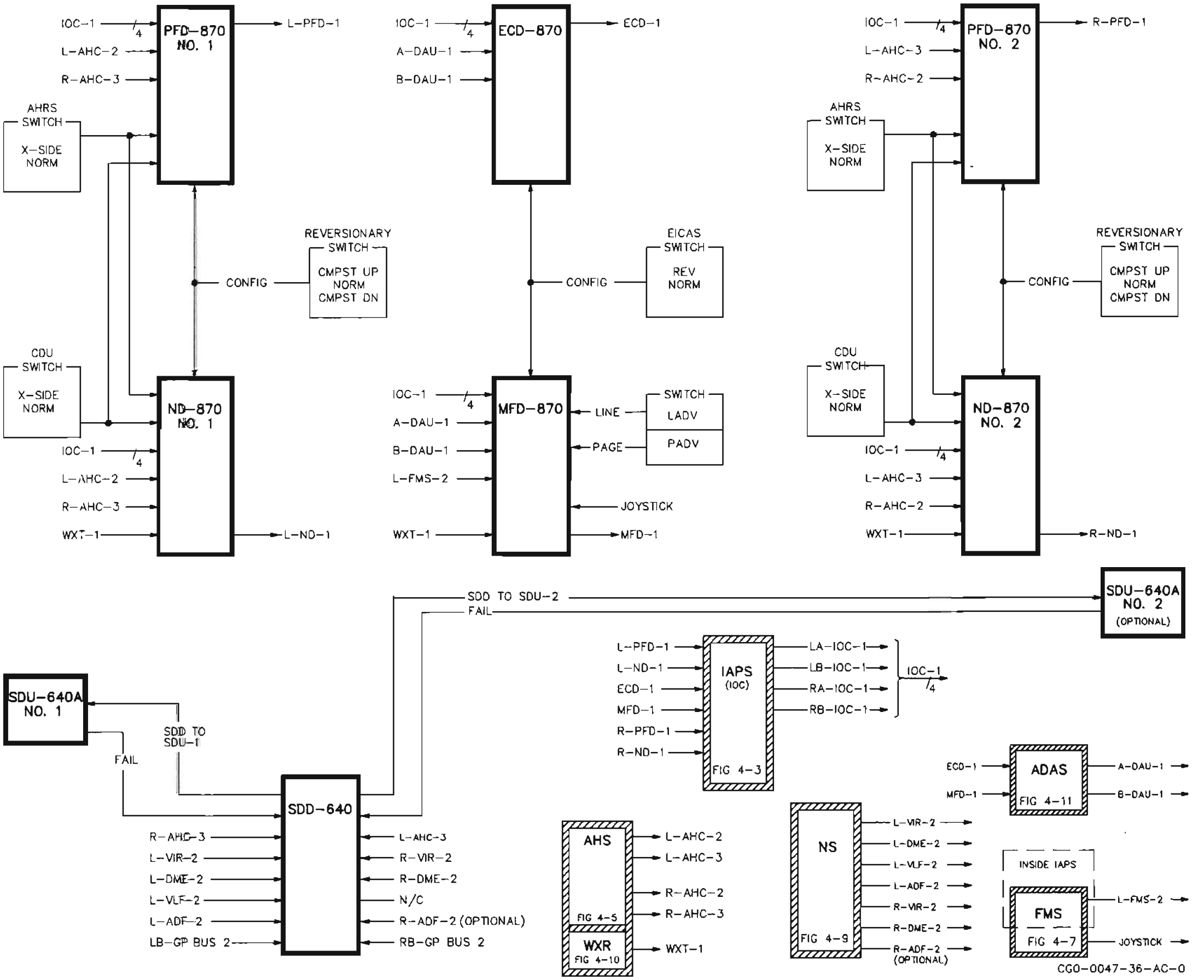

IDS (Instrument Display System) Overview
Figure 4-2

4.3.1.2 System Schematic

The pilot PFD-870 consists of an EFD electronic flight display, an MEM memory module, and a BZL bezel. The PFD is a single LRU at the flight-line maintenance level, but is broken into the EFD/MEM/BZL components for training purposes. Refer to figure 4-2-1, sheet 1.

The left PFD receives ARINC 429 high-speed data bus inputs from each of the four input/output concentrators in the IAPS system. These four buses are applied to all six of the large displays. The LA-IOC-1 and the LB-IOC-1 buses are from the left side of the IAPS. The RA-IOC-1 and the RB-IOC-1 buses are from the right side of the IAPS. Each pair of buses is input through a receiver and multiplexed to the receive port of a UART. Data is read from both UART's through the I/O data bus. The I/O data bus also brings microprocessor generated output data to the left UART. The UART reads this data, and applies serial output to an ARINC 429 low-speed transmitter. The transmitted L-PFD-1 data bus is applied to the 1A and 1B concentrators in the IAPS.

The PFD also receives ARINC 429 high-speed data bus inputs from both attitude heading systems. These two buses are applied to the left ND as well. The L-AHC-2 and the R-AHC-3 buses are input through a receiver and multiplexed to the receive port of a UART. Data is read from the UART through the I/O data bus. The EFD contains two additional data bus input circuits which connect to the AHC multiplexer. These circuits are not used in the PFD configuration.

Several discrete inputs are applied to the PFD and read by the microprocessor through the I/O data bus. These discretes are the four configuration inputs, two reversionary switch inputs, and two unused inputs. All eight inputs are diode isolated and tied to a pullup resistor.

The four configuration inputs report to internal software the EFD function (PFD/ND/ECD/MFD) as installed in the aircraft. For the pilot PFD configuration, inputs 1 and 2 are hard wired to ground, and inputs 3 and 4 are tied to reversionary switch S200. This switch grounds input 3 in the CMPST UP setup and grounds input 4 in the CMPST DN setup. Normally, both input 3 and input 4 are open. In the CMPST UP setup, the PFD displays PFD/ND composite data and the ND is blank. In the CMPST DN setup, the PFD is blank and the ND displays composite PFD/ND data. These setups are used if one of the displays is malfunctioning.

The two reversionary switch inputs select cross-side attitude heading data and select cross-side CDU control. Switch S203 applies a ground input to the PFD (and to the left ND) when set to the AHRS X-SIDE position. At this position, the PFD uses attitude heading data from the right side AHC. Normally, this input is open and the PFD uses attitude heading data from the left (onside) AHC. Switch S202 applies a ground input to the PFD (and to the left ND) when set to the CDU X-SIDE position. At this position, the PFD (and ND) are controlled by the right side CDU. Normally, this input is open and the PFD is controlled by the left (onside) CDU. Switch S202 is wired so that it also reports X-CDU selection to the onside CDU.

The two unused discrete inputs are used in other configurations of the EFD, but are not connected in the PFD configuration.

The eight discrete inputs are applied to a pair of multiplexers. Each multiplexer output is applied to a buffer circuit, which is read by the microprocessor through the I/O data bus.

The I/O data bus interfaces with the 16-bit I/O microprocessor data bus through a transceiver. The I/O data bus carries IAPS data input, attitude heading data input, and discrete data input to the microprocessor. The I/O data bus also carries data from the I/O microprocessor to a UART for transmission as the L-PFD-1 output from the unit.

The PFD contains an I/O microprocessor and a display microprocessor. The I/O processor controls all external data flow through the transceiver as described above. The display processor controls the crt display functions of the unit. Both processors apply an address output through a latch onto the system address bus. Both processors also read and write data through a dedicated transceiver to/from the system data bus. These system buses allow the two processors to communicate with each other and with the MEM module.

The 16-bit display microprocessor data bus interfaces with the 8-bit display data bus through a second transceiver. This is not the same transceiver described in the previous paragraph. The display data bus carries weather radar data (not used in the PFD), program PROM data, intensity data, various

monitor data, and BZL pushbutton data (not used in the PFD) to the microprocessor. The display data bus also carries weather radar control data (not used in the PFD), raster data, stroke data, brightness data, and various control data from the microprocessor to crt related circuits within the EFD.

The EFD contains a weather radar input circuit. No input is applied to this circuit in the PFD, but it will be briefly described for completeness. The circuit contains an ARINC 453 receiver which applies input data to the WXR input chip. This chip decodes a WXR video output for use by the raster draw circuit, and a data output for use by the display microprocessor. A dedicated transceiver allows the processor to apply control to the WXR input chip, and to read WXR information onto the display data bus.

Program memory provides required executable routines. This block is provided to represent the control algorithms that regulate the EFD unit operation. The algorithms that regulate PFD operation are contained in the MEM memory.

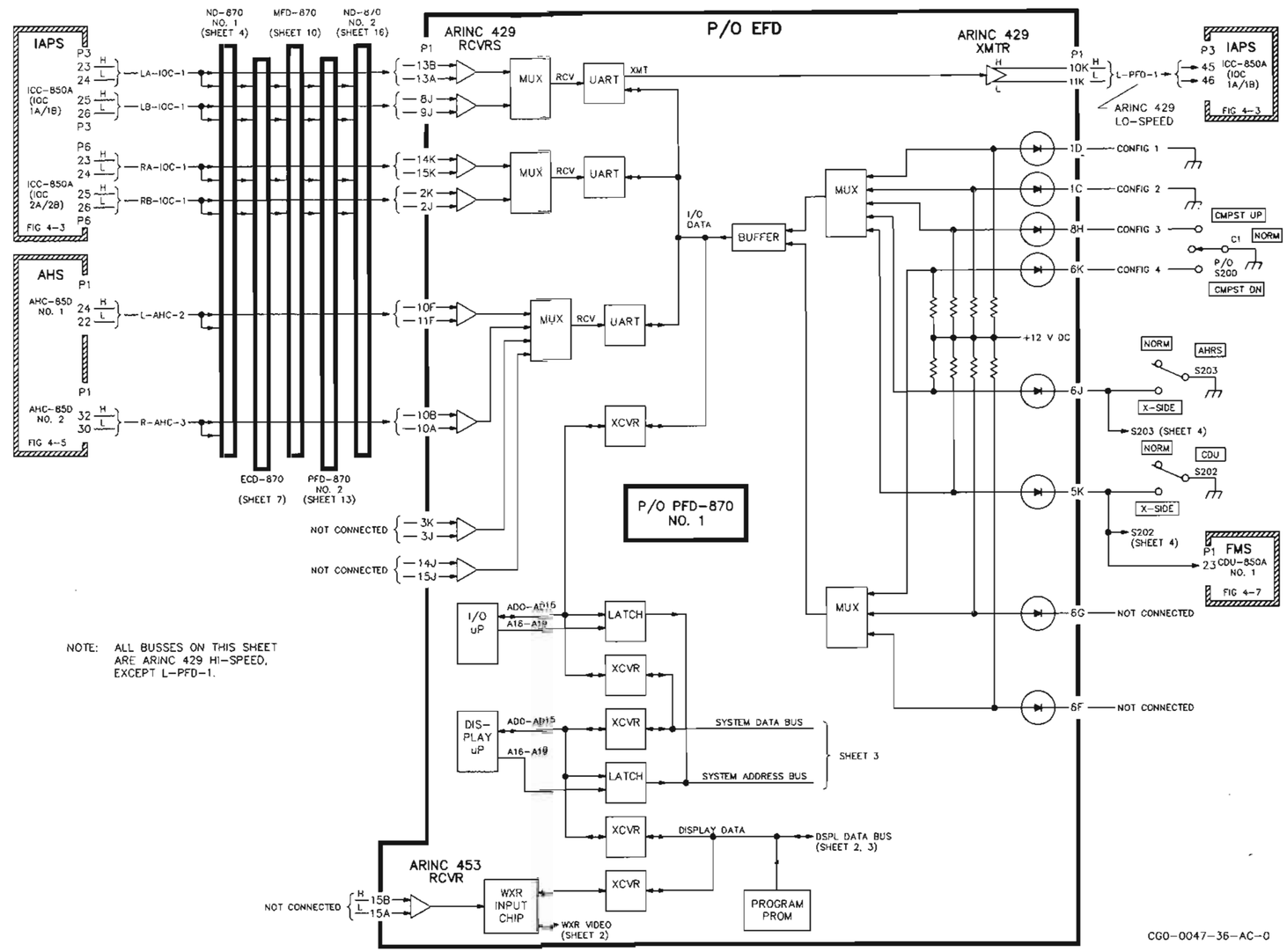

NOTE: ALL BUSSES ON THIS SHEET ARE ARINC 429 HI-SPEED, EXCEPT L-PFD-1.

IDS System Schematic
Figure 4-2-1 (Sheet 1 of 21)

Refer to figure 4-2-1, sheet 2.

The left PFD is powered by the no. 1 +28-V dc aircraft supply. A zener diode regulates the power input, which is applied through an emi filter to the low-voltage power supply. The low-voltage power supply generates the internally required voltage levels and applies a +32-V dc output to both the high-voltage power supply and the video power supply.

The high-voltage power supply generates the anode (18-kV dc) and focus (4.6- to 6.2-kV dc) outputs to the crt. The high-voltage supply also provides an HV ON monitor output which is buffered onto the display data bus. A static focus input and an on/off input are also applied to the high-voltage supply. The static focus input from the display data bus is used to determine the proper focus voltage output applied to the crt. The control on/off input from the regulator blanker circuit turns off the supply if monitored conditions become excessive.

The video power supply generates the screen (400-V dc) and filament (6.2-V ac) outputs to the crt. The video supply also provides a B+ monitor output to the video monitor and to the regulator blanker circuit. The B+ voltage is used as a reference level by the video monitor. The regulator blanker provides a blanking output to shut off the high-voltage supply if the B+ monitor or the screen voltage exceeds preset limits.

The display data bus provides microprocessor generated information to the raster circuit, the stroke circuit, a control decoder, a static focus decoder, and a brightness decoder. The display data bus also gathers selected intensity, high-voltage supply monitor (HV ON) status, video monitor status, and temperature monitor status information for use by the microprocessor.

The raster circuit provides the video drive to illuminate large portions of the screen (such as the sky background). The raster data is read by a FIFO (first in first out) memory circuit. The buffered FIFO output is applied to a raster input generator. This generator develops video and position ouputs and also controls the raster memory. The raster video output is multiplexed with the WXR video (not used by the PFD) and applied to the raster data processor. The raster position output (X/Y) is multiplexed with the position output (X/Y) from the stroke circuit and applied to the raster memory. The raster memory is controlled by the input generator, so that both raster and stroke X/Y position data outputs are properly stored and then input to the raster data processor. The raster data processor provides processed video output to the video control circuit.

The stroke circuit provides the video drive to illuminate small precise images on the screen (such as the alphanumerics and symbols). The stroke data is read by a FIFO (first in first out) memory circuit. The buffered FIFO output is applied to a stroke state machine, a character latch, an angle integrator, and the video control circuit. The stroke state machine generates control logic for use in processing the stroke data and load logic for use by the video control circuit. The character latch decodes character data and applies it to a map PROM. The character (with mapped location) is then applied to a sequence counter and PROM. The screen position is counted out and applied to an angle integrator. The angle integrator is strobed by FIFO memory to apply display angle data to the sin/cos PROM's.

The sin/cos PROM's convert the angle input into a sine X output and a cosine Y output. The sine X output is then integrated to produce the X (horizontal) position value. The integrator is controlled by a strobe from the FIFO memory. The X POS value is applied to the raster address multiplexer (described in a previous paragraph), the video control circuit, and the X-position counter. The cosine Y output from the sin/cos PROM's is processed in a similar manner. A vertical integrator is strobed by the FIFO to produce the Y POS value. This value is applied to the raster address multiplexer (previously described), the video control circuit, and the Y-position counter. The X/Y screen position is counted out by the two position counters. These positions are digital-to-analog converted and then adjusted for proper gain, track, offset, and linearity. The resultant horizontal and vertical screen position voltages are converted to current outputs by the deflection power amplifiers. The amplified current outputs are applied to the yoke of the crt assembly, which deflects the electron beams to the proper X and Y coordinates on the screen. A temperature sensor monitors the deflection power amplifiers and reports excessive amplifier heat to the microprocessor through the display data bus.

The video control circuit receives raster video, stroke video, and X/Y screen deflection data inputs. The video control circuit output is used to derive the crt cathode drive signals. The stroke state machine provides on/off logic used to load raster/stroke video. The control circuit output is applied to the color

PROM's. These PROM's apply red, green, and blue data outputs to correspond with the control input. This color data is digital-to-analog converted and applied to the video amplifier. The amplified red, green, and blue video is applied to the cathodes of the crt and a video monitor. The video monitor compares the three color videos to the B+ reference from the video power supply. If video becomes excessive, an on/off control output is generated to disable the color PROM's, and a monitor output is generated and buffered onto display data bus to report this condition to the microprocessor.

A convergence and purity set circuit provides fine adjustments for the electron beam deflections. This circuit provides outer beam, inner beam, and purity outputs to the crt assembly.

A control decoder circuit reads the display data bus and applies control logic to various circuits in the PFD. This circuit also decodes a video enable from the data bus and applies it to the video amplifier. This VID ENBL line allows the microprocessor to control amplifier bias.

Front panel BRT and BAL knobs function with the +28-V dc lighting bus input to control the crt display intensity. The BRT and BAL knobs apply a variable 0- to 9.5-V dc input to a multiplexer. The +28-V dc lighting bus is also applied to this multiplexer. The multiplexer output is analog-to-digital converted and loaded onto the display data bus. The display microprocessor then reads this intensity select data from the bus and applies corresponding control data output onto the bus. This data is decoded from the bus by a flip-flop, digital-to-analog converted, and then applied as the brightness control to the color d/a converters.

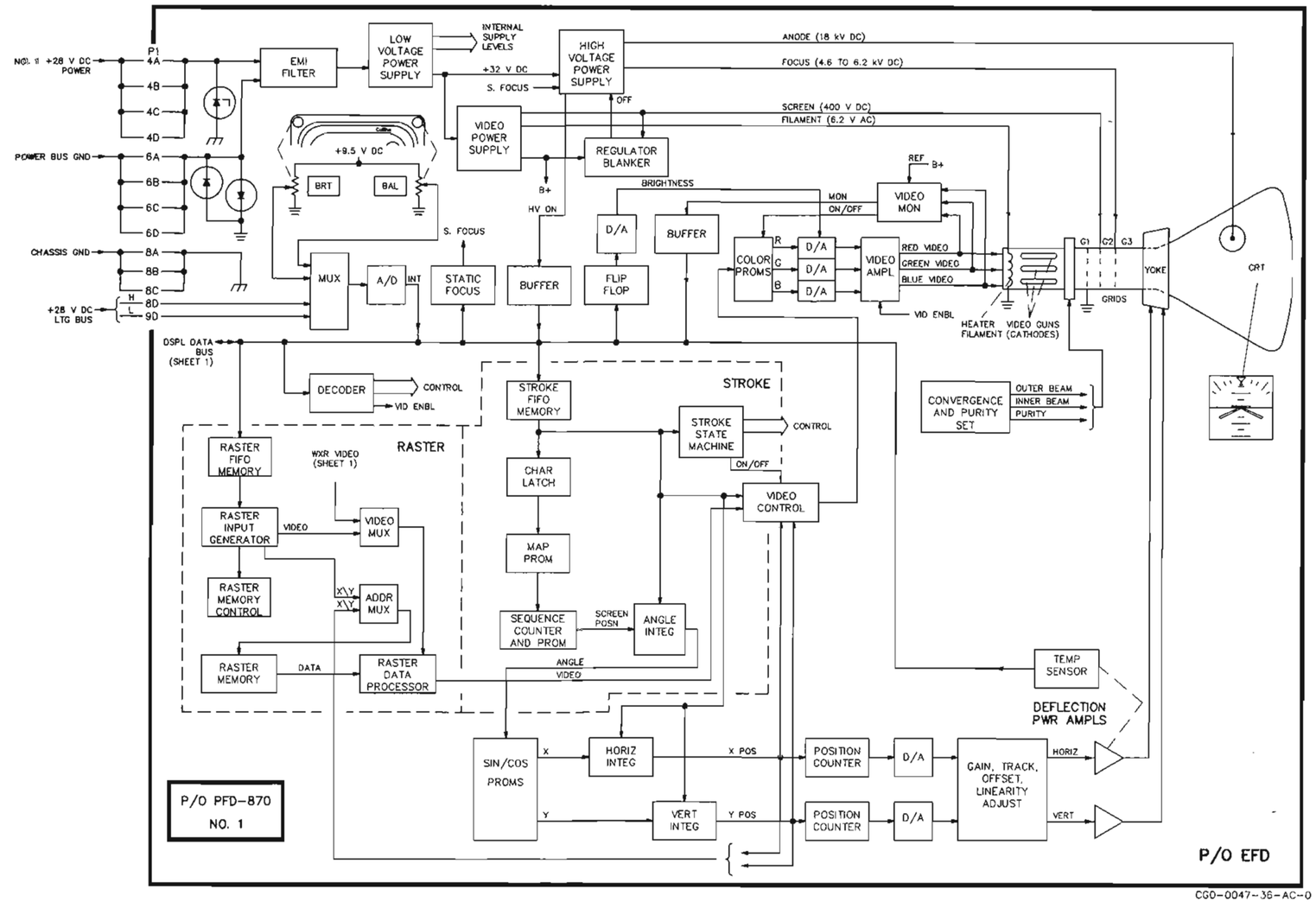

IDS System Schematic
Figure 4-2-1 (Sheet 2 of 21)

Refer to figure 4-2-1, sheet 3.

The left PFD is configured using an MEM memory module and a BZL bezel. This sheet shows the MEM and BZL circuits.

The MEM contains system RAM, system PROM, and a line decoder. This memory contains the "PFD" configuration algorithms. These algorithms will not be detailed here, but it is important to note that the correct MEM must be installed before the unit can function as a PFD.

The system address bus allows both the I/O and the display microprocessors (in the EFD) access to the RAM and PROM. The addressed data output from this memory is loaded onto the system data bus for use by either processor. A line decoder is addressed to generate the required internal chip enables. All power and control for the MEM is supplied from the EFD.

The BZL contains interlock strapping and the PFD inclinometer. The interlocks report BZL type to the display microprocessor. Lighting power is supplied by the 115-V ac lighting bus; this bus is routed through the EFD to provide backlighting for the BZL.

The BZL provides interlock strap and pushbutton action (not applicable to PFD) data to the display microprocessor through an encoder/buffer circuit. The pushbutton part of this circuit is not used on this BZL, but is briefly described here for completeness. The encoder/buffer circuit applies +5-V dc strobe voltages to five input pins on the BZL. These voltages normally are applied to one side of a pushbutton switch. The four sense lines normally are wired to the other side of the switches, so that any pushbutton action is detected and encoded onto the display data bus.

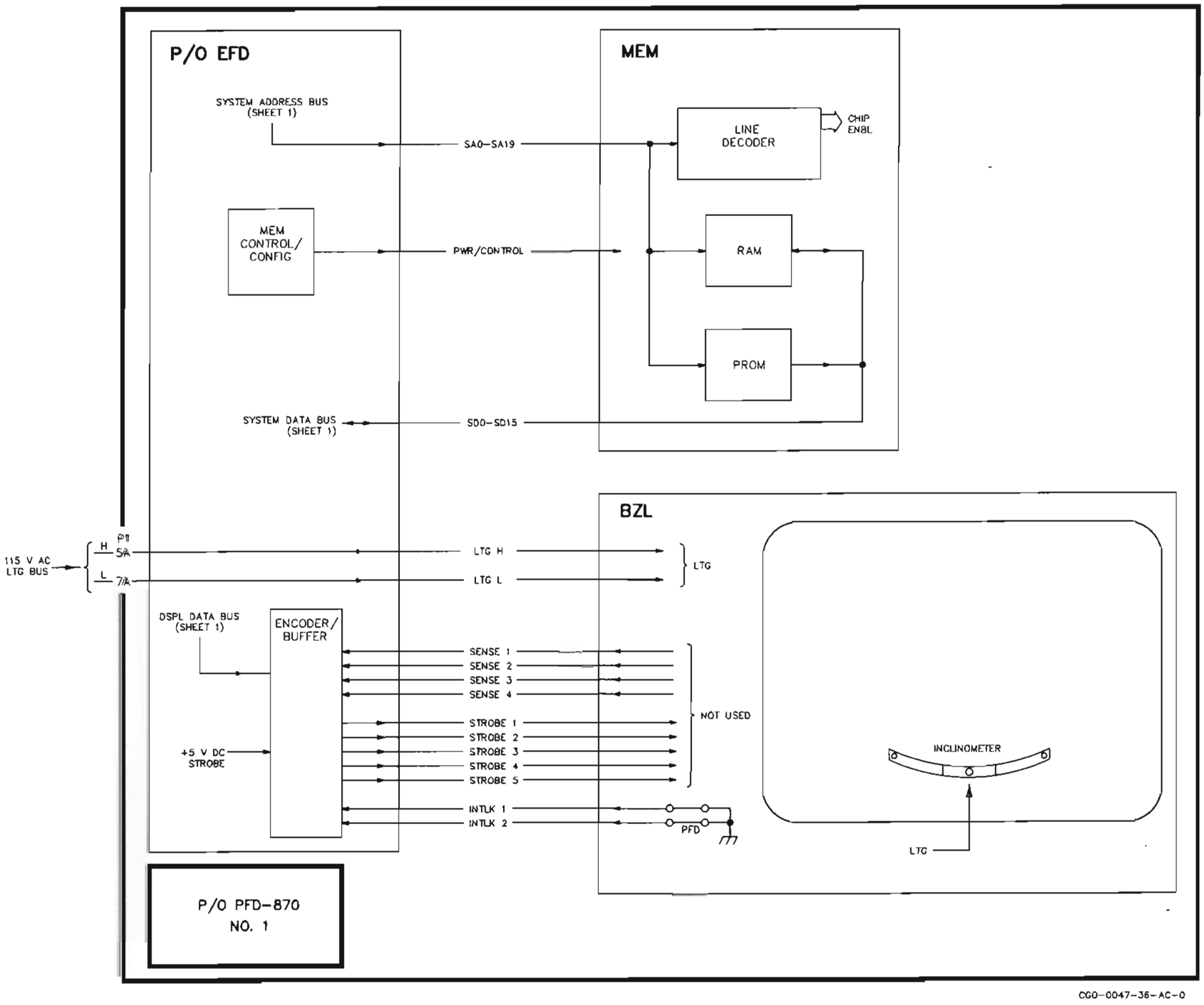

IDS System Schematic
Figure 4-2-1 (Sheet 3 of 21)

The pilot ND-870 consists of an EFD electronic flight display, an MEM memory module, and a BZL bezel. The ND is a single LRU at the flight-line maintenance level, but is broken into the EFD/MEM/BZL components for training purposes. Refer to figure 4-2-1, sheet 4.

The left ND receives ARINC 429 high-speed data bus inputs from each of the four input/output concentrators in the IAPS system. The LA-IOC-1 and the LB-IOC-1 buses are from the left side of the IAPS. The RA-IOC-1 and the RB-IOC-1 buses are from the right side of the IAPS. Each pair of buses is input through a receiver and multiplexed to the receive port of a UART. Data is read from both UART's through the I/O data bus. The I/O data bus also brings microprocessor generated output data to the left UART. The UART reads this data and applies serial output to an ARINC 429 low-speed transmitter. The transmitted L-ND-1 data bus is applied to the 1A and 1B concentrators in the IAPS.

The ND also receives ARINC 429 high-speed data bus inputs from both attitude heading systems. The L-AHC-2 and the R-AHC-3 buses are input through a receiver and multiplexed to the receive port of a UART. Data is read from the UART through the I/O data bus. The EFD contains two additional data bus input circuits which connect to the AHC multiplexer. These circuits are not used in the ND configuration.

Several discrete inputs are applied to the ND and read by the microprocessor through the I/O data bus. These discretes are the four configuration inputs, two reversionary switch inputs, and two unused inputs. All eight inputs are diode isolated and tied to a pullup resistor.

The four configuration inputs report to internal software the EFD function (PFD/ND/ECD/MFD) as installed in the aircraft. For the pilot ND configuration, input 1 is open, input 2 is hard wired to ground, and inputs 3 and 4 are tied to reversionary switch S200. This switch grounds input 4 in the CMPST UP setup and grounds input 3 in the CMPST DN setup. Normally, both input 3 and input 4 are open. In the CMPST UP setup, the PFD displays PFD/ND composite data and the ND is blank. In the CMPST DN setup, the PFD is blank and the ND displays composite PFD/ND data. These setups are used if one of the displays is malfunctioning.

The two reversionary switch inputs select cross-side attitude heading data and cross-side CDU control. Switch S203 applies a ground input to the ND when set to the AHRS X-SIDE position. At this position, the ND uses attitude heading data from the right side AHC. Normally, this input is open and the ND uses attitude heading data from the left (onside) AHC. Switch S202 applies a ground input to the ND when set to the CDU X-SIDE position. At this position, the ND is controlled by the right side CDU. Normally, this input is open and the ND is controlled by the left (onside) CDU.

The two unused discrete inputs are used in other configurations of the EFD, but are not connected in the ND configuration.

Internal EFD operation is described on a previous page.

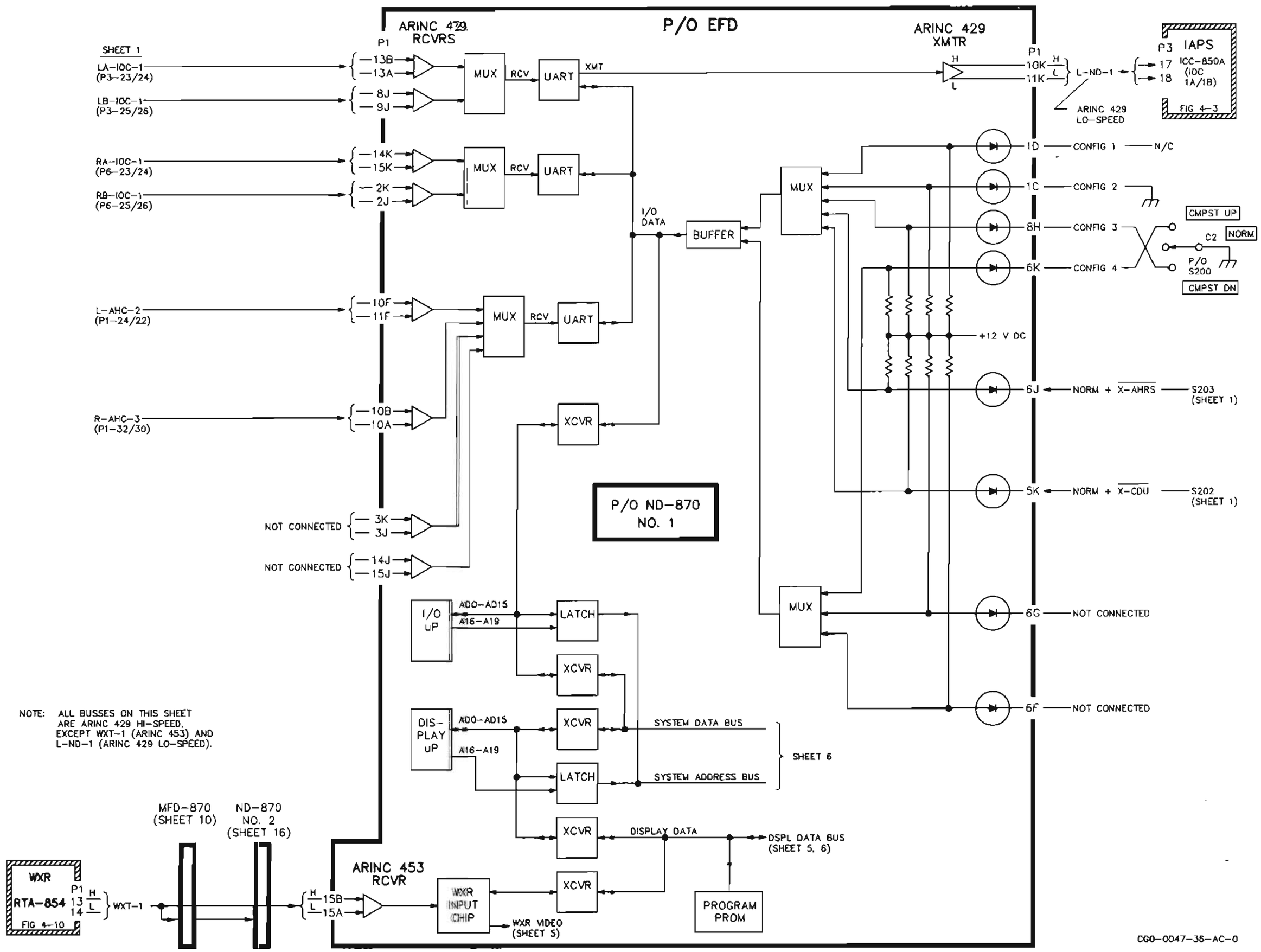

IDS System Schematic
Figure 4-2-1 (Sheet 4 of 21)

Refer to figure 4-2-1, sheet 5.

The left ND is powered by the no. 1 +28-V dc aircraft supply. Internal EFD operation is described on a previous page.

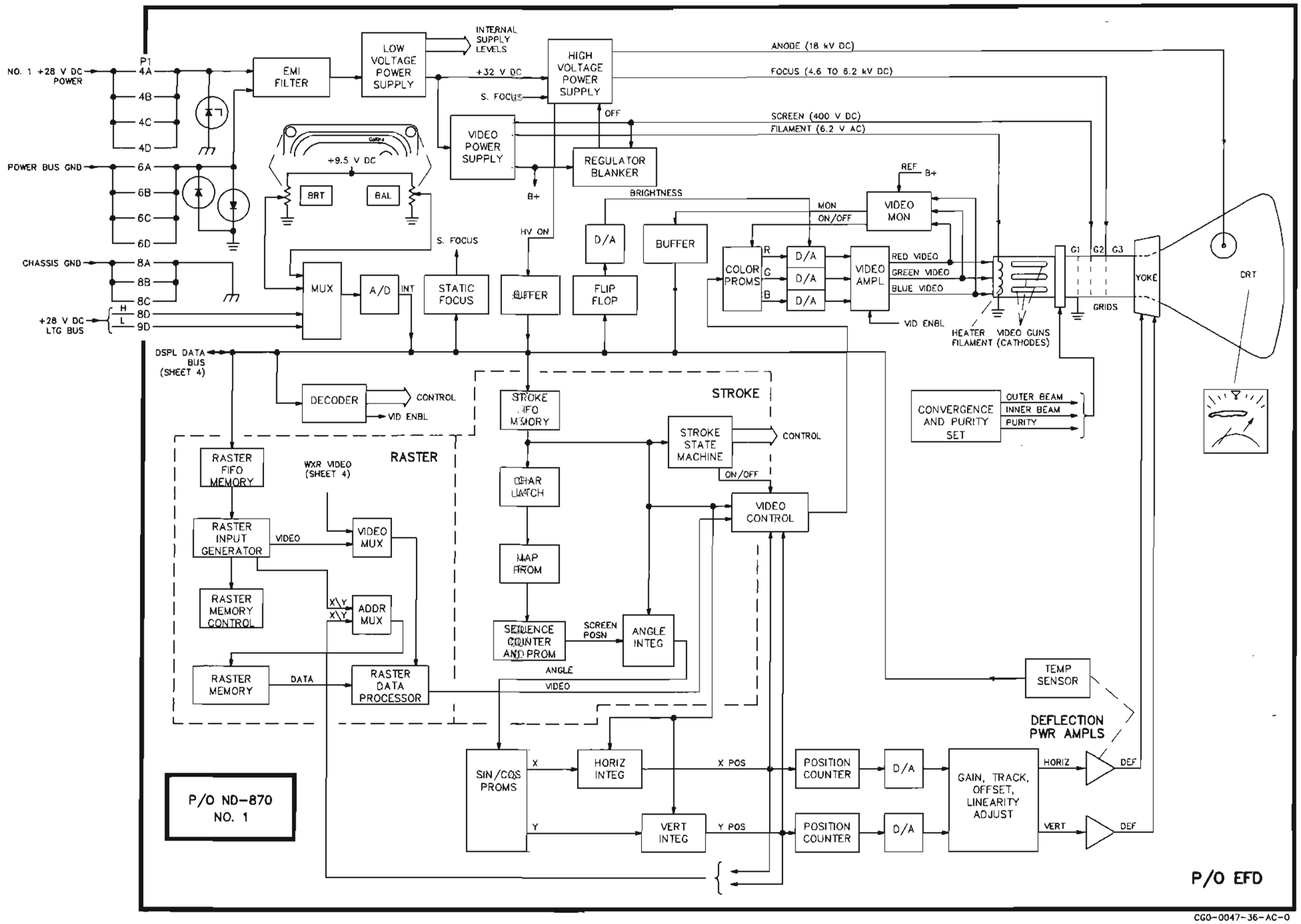

IDS System Schematic
Figure 4-2-1 (Sheet 5 of 21)

Refer to figure 4-2-1, sheet 6.

The left ND is configured using an MEM memory module and a BZL bezel. This sheet shows the MEM and BZL circuits.

The MEM contains system RAM, system PROM, and a line decoder. This memory contains the "ND" configuration algorithms. These algorithms will not be detailed here, but it is important to note that the correct MEM must be installed before the unit can function as an ND.

The system address bus allows both the I/O and the display microprocessors (in the EFD) access to the RAM and PROM. The addressed data output from this memory is loaded onto the system data bus for use by either processor. A line decoder is addressed to generate the required internal chip enables. All power and control for the MEM is supplied from the EFD.

The BZL contains interlock strapping. The interlocks report BZL type to the display microprocessor. No lighting bus is required by the ND.

The BZL provides interlock strap and pushbutton action (not applicable to ND) data to the display microprocessor through an encoder/buffer circuit. The pushbutton part of this circuit is not used on this BZL, but is briefly described here for completeness. The encoder/buffer circuit applies +5-V dc strobe voltages to five input pins on the BZL. These voltages normally are applied to one side of a pushbutton switch. The four sense lines normally are wired to the other side of the switches, so that any pushbutton action is detected and encoded onto the display data bus.

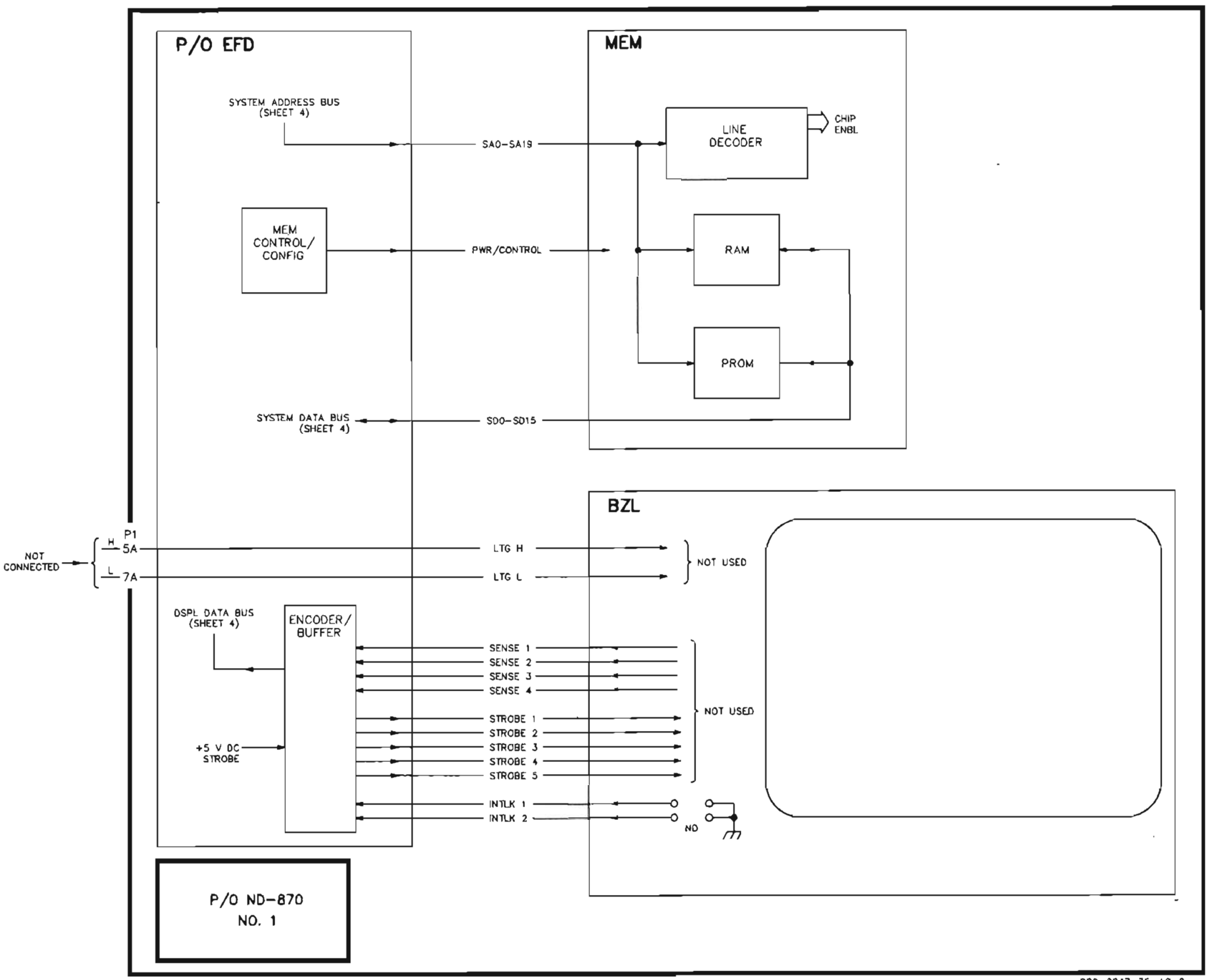

IDS System Schematic
Figure 4-2-1 (Sheet 6 of 21)

The ECD-870 consists of an EFD electronic flight display, an MEM memory module, and a BZL bezel. The ECD is a single LRU at the flight-line maintenance level, but is broken into the EFD/MEM/BZL components for training purposes. Refer to figure 4-2-1, sheet 7.

The ECD receives ARINC 429 high-speed data bus inputs from each of the four input/output concentrators in the IAPS system. The LA-IOC-1 and the LB-IOC-1 buses are from the left side of the IAPS. The RA-IOC-1 and the RB-IOC-1 buses are from the right side of the IAPS. Each pair of buses is input through a receiver and multiplexed to the receive port of a UART. Data is read from both UART's through the I/O data bus. The I/O data bus also brings microprocessor generated output data to the left UART. The UART reads this data and applies serial output to an ARINC 429 low-speed transmitter. The transmitted ECD-1 data bus is applied to the 1A and 1B concentrators in the IAPS and to the data acquisition unit (ADAS).

The ECD also receives ARINC 429 high-speed data bus inputs from both channels of the data acquisition unit (ADAS). These two buses are applied to the MFD as well. The A-DAU-1 and the B-DAU-1 buses are input through a receiver and multiplexed to the receive port of a UART. Data is read from the UART through the I/O data bus. The EFD contains two additional data bus input circuits which connect to the DAU multiplexer. These circuits are not used in the ECD configuration.

Several discrete inputs are applied to the ECD and read by the microprocessor through the I/O data bus. These discretes are the four configuration inputs and four unused inputs. All eight inputs are diode isolated and tied to a pullup resistor.

The four configuration inputs report to internal software the EFD function (PFD/ND/ECD/MFD) as installed in the aircraft. For the ECD configuration, inputs 1 and 2 are hard wired to ground, input 3 is open, and input 4 is tied to reversionary switch S201. (Note that section C2 of this switch is shown on the MFD system schematic.) This switch grounds input 4 in the NORM setup and opens input 4 in the REV setup. In the NORM setup, the ECD displays engine data and the MFD displays multifunction data. In the REV setup, the ECD is blank and the MFD displays engine data. The REV setup is used if the ECD malfunctions.

The four unused discrete inputs are used in other configurations of the EFD, but are not connected in the ECD configuration.

Internal EFD operation is described on a previous page.

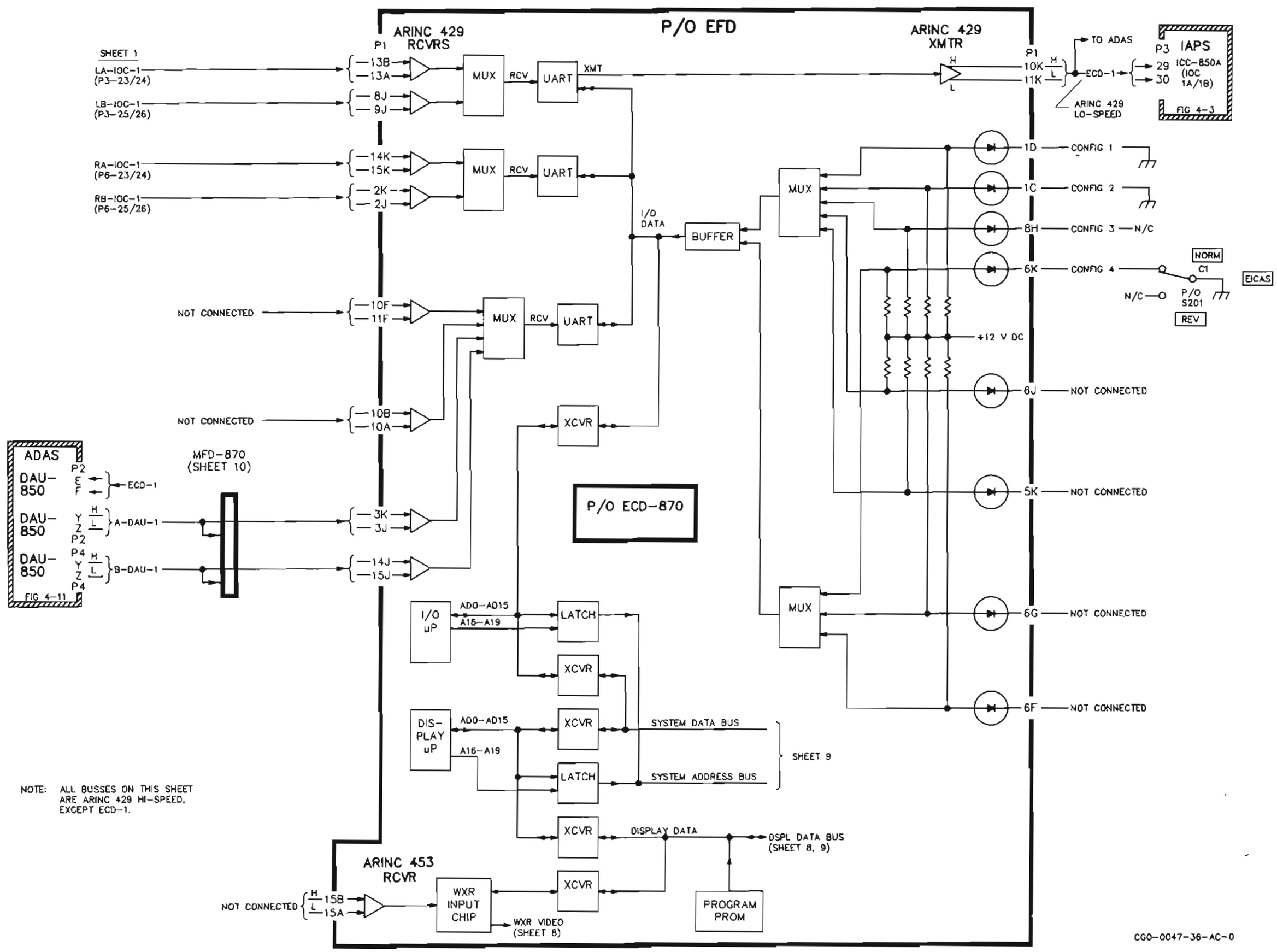

IDS System Schematic
Figure 4-2-1 (Sheet 7 of 21)

Refer to figure 4-2-1, sheet 8.

The ECD is powered by the no. 1 +28-V dc aircraft supply. Internal EFD operation is described on a previous page.

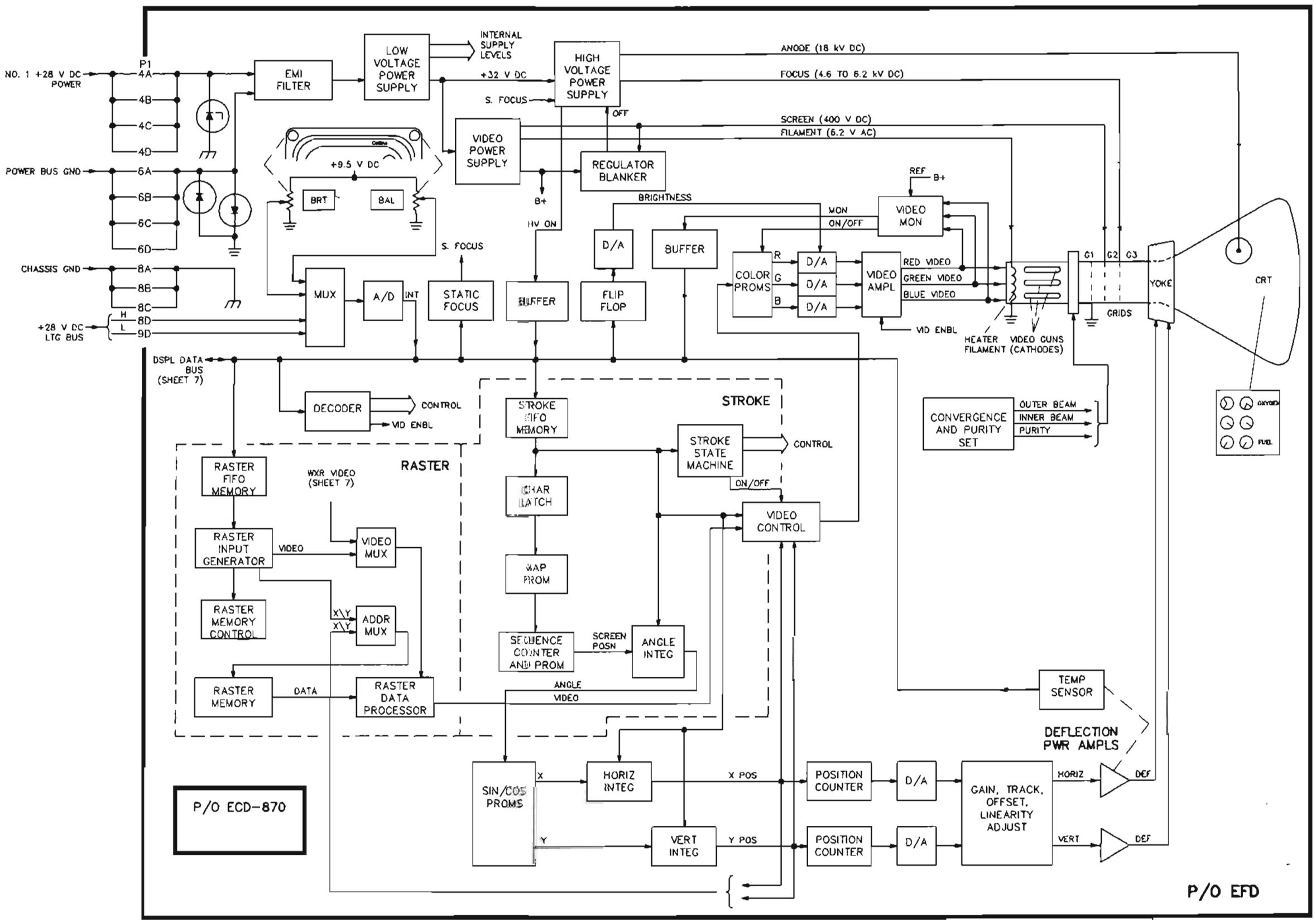

IDS System Schematic
Figure 4-2-1 (Sheet 8 of 21)

Refer to figure 4-2-1, sheet 9.

The ECD is configured using an MEM memory module and a BZL bezel. This sheet shows the MEM and BZL circuits.

The MEM contains system RAM, system PROM, and a line decoder. This memory contains the "ECD" configuration algorithms. These algorithms will not be detailed here, but it is important to note that the correct MEM must be installed before the unit can function as an ECD.

The system address bus allows both the I/O and the display microprocessors (in the EFD) access to the RAM and PROM. The addressed data output from this memory is loaded onto the system data bus for use by either processor. A line decoder is addressed to generate the required internal chip enables. All power and control for the MEM is supplied from the EFD.

The BZL contains interlock strapping and three pushbuttons. The interlocks report BZL type to the display microprocessor. Lighting power is supplied by the 115-V ac lighting bus; this bus is routed through the EFD to provide backlighting for the BZL.

The BZL provides interlock strap and pushbutton action data to the display microprocessor through an encoder/buffer circuit. The interlock strap status is directly buffered onto the display data bus. The encoder/buffer circuit applies +5-V dc strobe voltages to five input pins on the BZL. Strobe voltage no. 5 is applied to one side of all three pushbutton switches. A sense return line is wired to the other side of the each of the three switches, so that any pushbutton action is detected and encoded onto the display data bus.

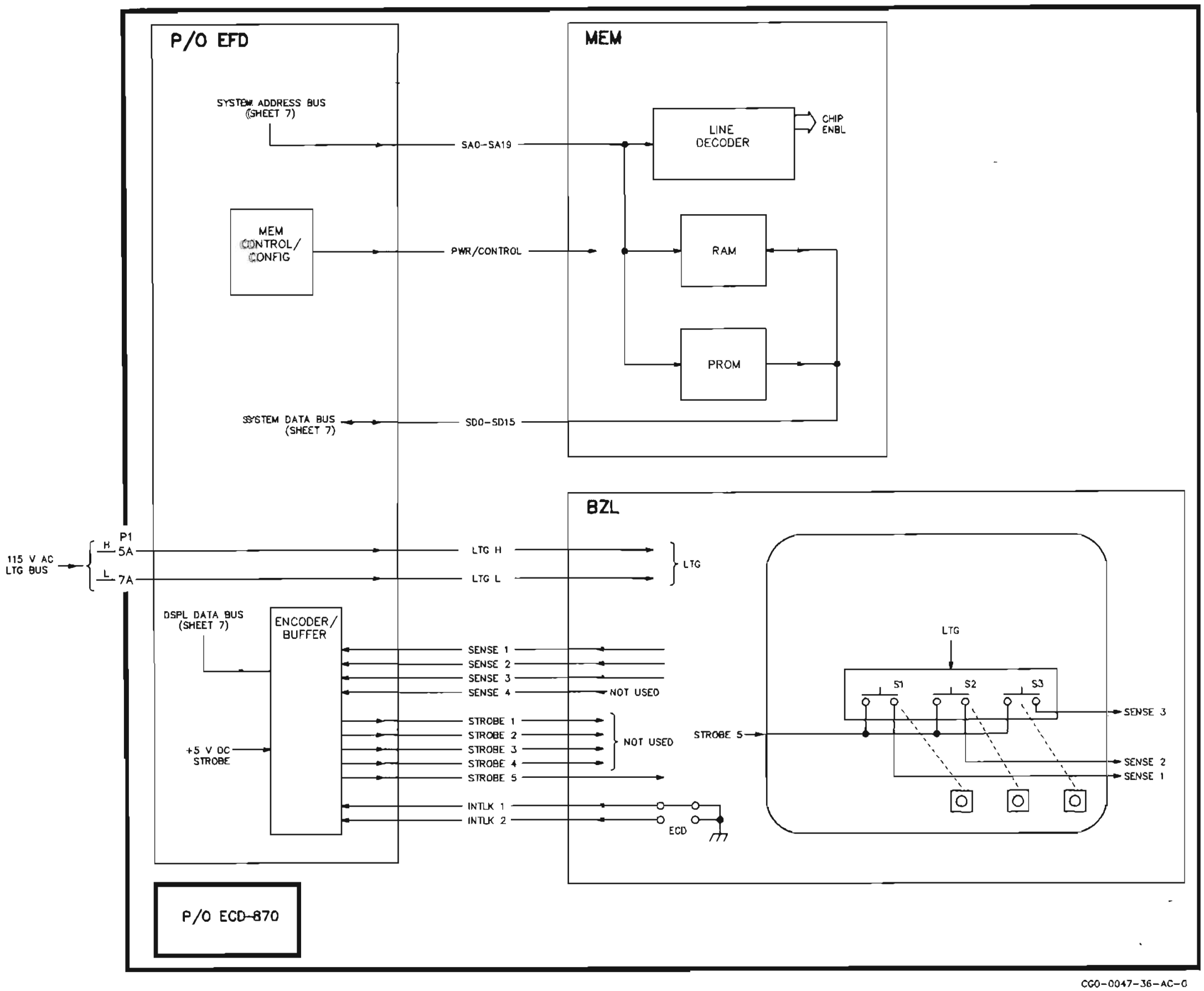

IDS System Schematic
Figure 4-2-1 (Sheet 9 of 21)

The MFD-870 consists of an EFD electronic flight display, an MEM memory module, and a BZL bezel. The MFD is a single LRU at the flight-line maintenance level, but is broken into the EFD/MEM/BZL components for training purposes. Refer to figure 4-2-1, sheet 10.

The MFD receives ARINC 429 high-speed data bus inputs from each of the four input/output concentrators in the IAPS system. The LA-IOC-1 and the LB-IOC-1 buses are from the left side of the IAPS. The RA-IOC-1 and the RB-IOC-1 buses are from the right side of the IAPS. Each pair of buses is input through a receiver and multiplexed to the receive port of a UART. Data is read from both UART's through the I/O data bus. The I/O data bus also brings microprocessor generated output data to the left UART. The UART reads this data and applies serial output to an ARINC 429 low-speed transmitter. The transmitted MFD-1 data bus is applied to the 2A and 2B concentrators in the IAPS and to the data acquisition unit (ADAS).

The MFD also receives ARINC 429 high-speed data bus inputs from the flight management system and from both channels of the data acquisition unit (ADAS). The L-FMS-2, the A-DAU-1, and the B-DAU-1 buses are input through a receiver and multiplexed to the receive port of a UART. Data is read from the UART through the I/O data bus.

Several discrete inputs are applied to the MFD and read by the microprocessor through the I/O data bus. These discretes are the four configuration inputs, two pushbutton switch inputs, two unused inputs, and four joystick inputs. All 12 inputs are diode isolated and tied to a pullup resistor.

The four configuration inputs report to internal software the EFD function (PFD/ND/ECD/MFD) as installed in the aircraft. For the MFD configuration, input 1 is open, input 2 is hard wired to ground, and inputs 3 and 4 are tied to reversionary switch S201. (Note that section C1 of this switch is shown on the ECD system schematic.) This switch grounds input 3 and opens input 4 in the NORM setup and opens input 3 and grounds input 4 in the REV setup. In the NORM setup, the ECD displays engine data and the MFD displays multifunction data. In the REV setup, the ECD is blank and the MFD displays engine data. The REV setup is used if the ECD malfunctions.

The two pushbutton switch inputs apply momentary grounds. The LADV switch (S215) provides line advance selection, and the PADV switch (S216) provides page advance selection.

The two unused discrete inputs are used in other configurations of the EFD, but are not connected in the MFD configuration.

The four joystick inputs apply position data from the CHP. A JS COM line ties the EFD ground (through a resistor and diode) to the joystick switch common in the CHP. Joystick action returns this JS COM ground reference to the JS UP, JS LT, JS DN, or the JS RT input of the MFD.

Internal EFD operation is described on a previous page.

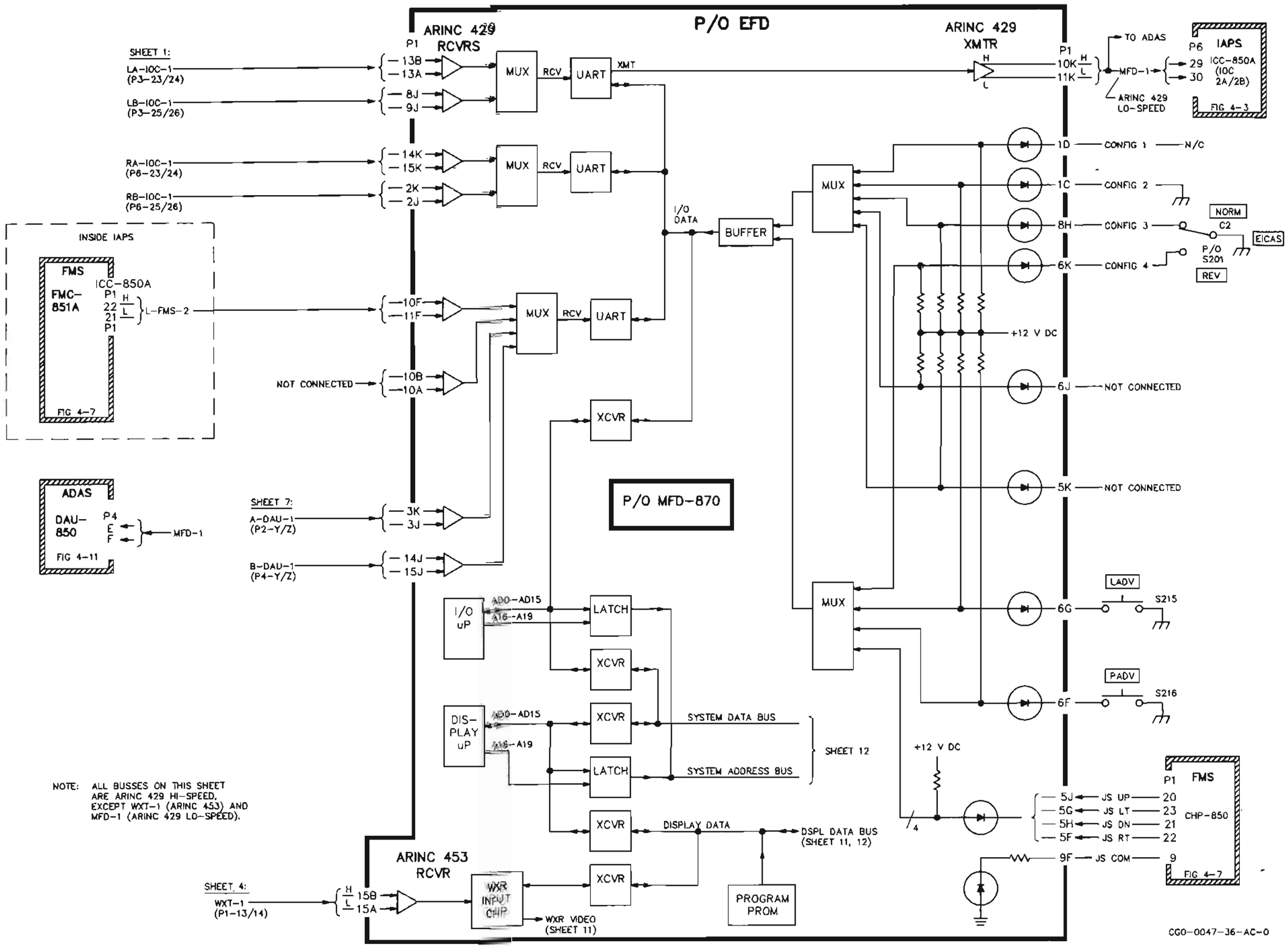

IDS System Schematic
Figure 4-2-1 (Sheet 10 of 21)

Refer to figure 4-2-1, sheet 11.

The MFD is powered by the no. 1 +28-V dc aircraft supply. Internal EFD operation is described on a previous page.

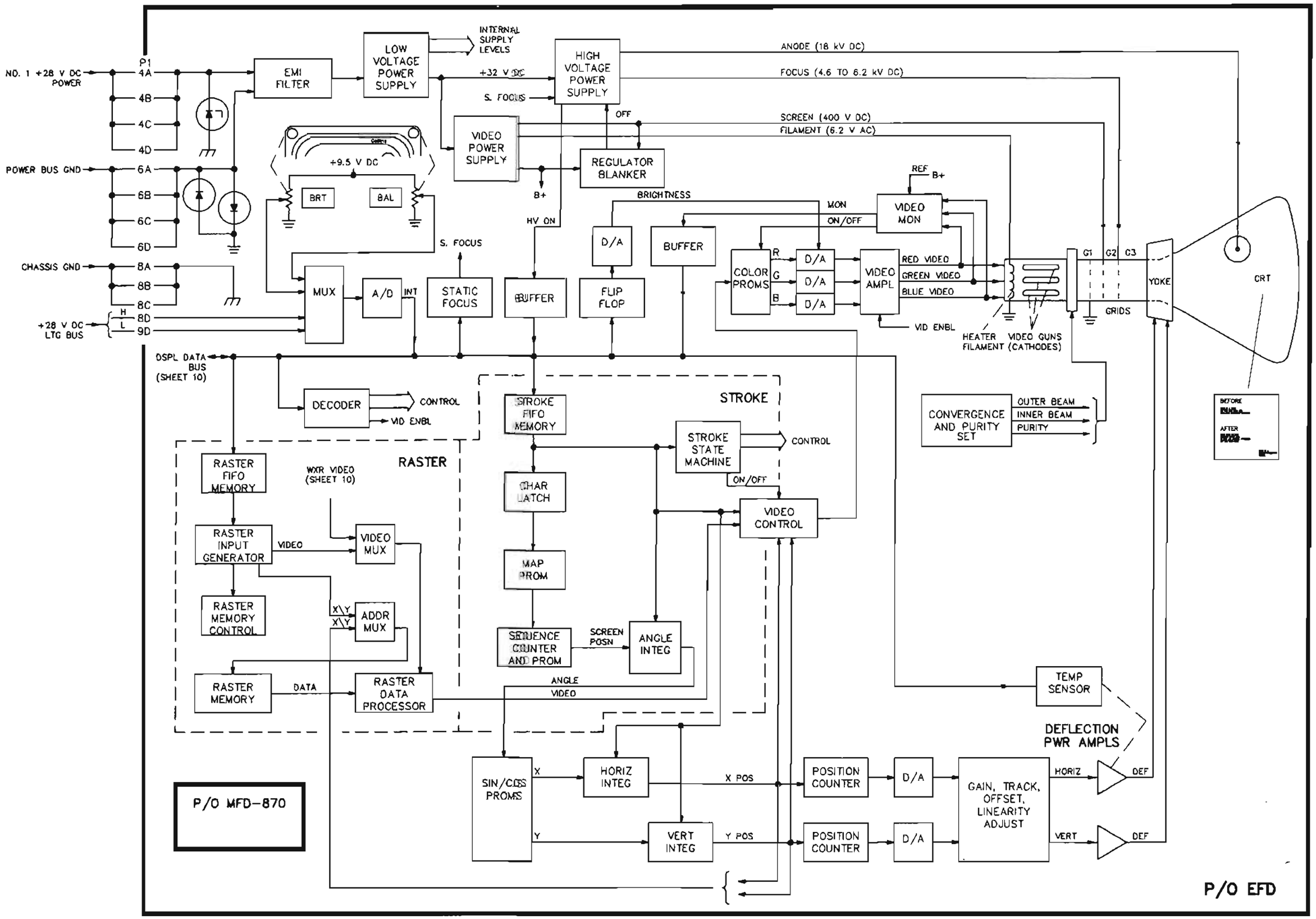

CGO-0047-36-AC-0

IDS System Schematic
Figure 4-2-1 (Sheet 11 of 21)

Refer to figure 4-2-1, sheet 12.

The MFD is configured using an MEM memory module and a BZL bezel. This sheet shows the MEM and BZL circuits.

The MEM contains system RAM, system PROM, and a line decoder. This memory contains the "MFD" configuration algorithms. These algorithms will not be detailed here, but it is important to note that the correct MEM must be installed before the unit can function as an MFD.

The system address bus allows both the I/O and the display microprocessors (in the EFD) access to the RAM and PROM. The addressed data output from this memory is loaded onto the system data bus for use by either processor. A line decoder is addressed to generate the required internal chip enables. All power and control for the MEM is supplied from the EFD.

The BZL contains interlock strapping and 19 pushbuttons. The interlocks report BZL type to the display microprocessor. Lighting power is supplied by the 115-V ac lighting bus; this bus is routed through the EFD to provide backlighting for the BZL.

The BZL provides interlock strap and pushbutton action data to the display microprocessor through an encoder/buffer circuit. The interlock strap status is directly buffered onto the display data bus. The encoder/buffer circuit applies +5-V dc strobe voltages to five input pins on the BZL. These strobe voltages are applied to one side of all 19 pushbutton switches. The four sense return lines are wired to the other side of the 19 switches in such a way that any pushbutton action is detected and encoded onto the display data bus.

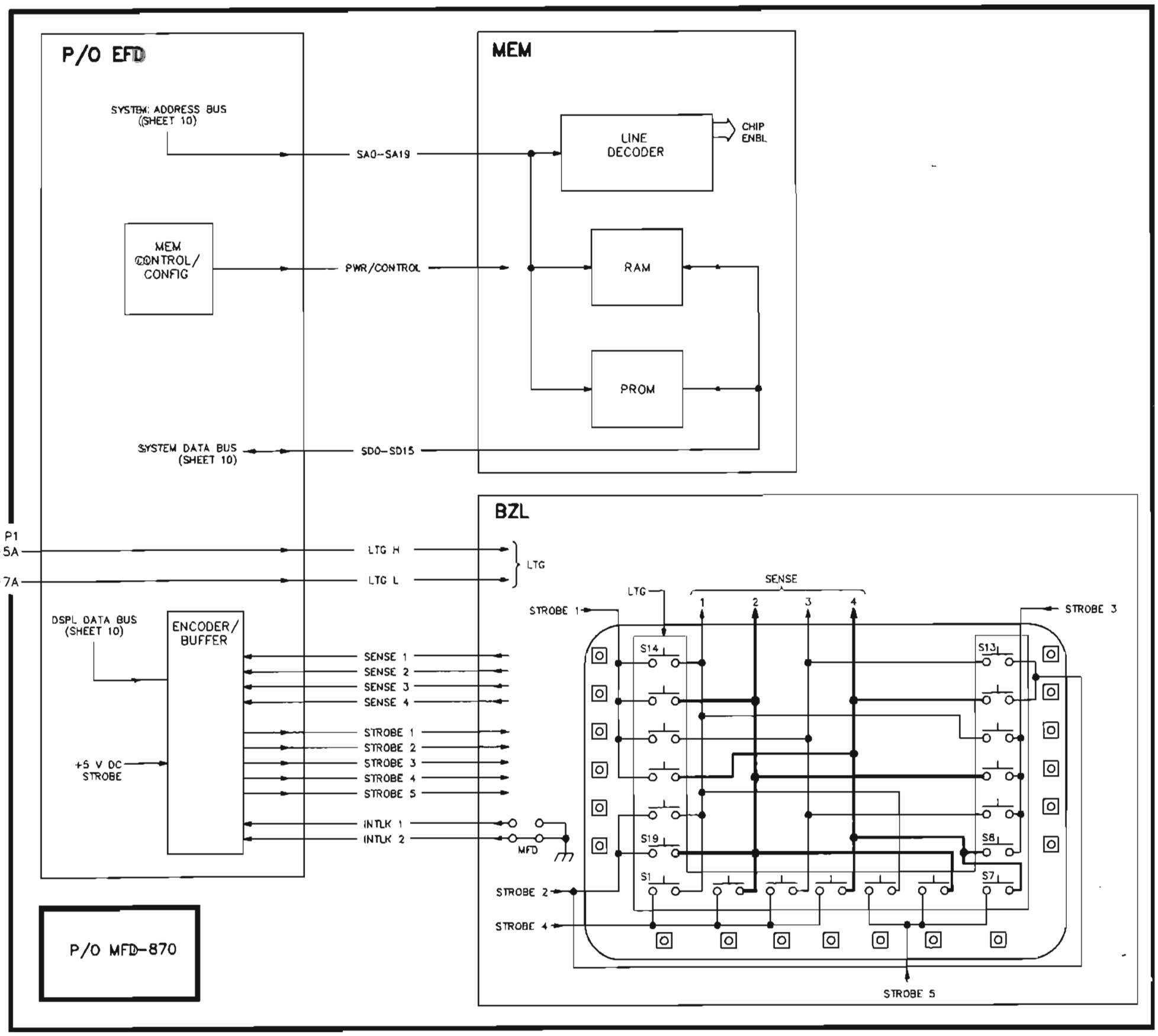

IDS System Schematic
Figure 4-2-1 (Sheet 12 of 21)

The copilot PFD-870 consists of an EFD electronic flight display, an MEM memory module, and a BZL bezel. The PFD is a single LRU at the flight-line maintenance level, but is broken into the EFD/MEM/BZL components for training purposes. Refer to figure 4-2-1, sheet 13.

The right PFD receives ARINC 429 high-speed data bus inputs from each of the four input/output concentrators in the IAPS system. The LA-IOC-1 and the LB-IOC-1 buses are from the left side of the IAPS. The RA-IOC-1 and the RB-IOC-1 buses are from the right side of the IAPS. Each pair of buses is input through a receiver and multiplexed to the receive port of a UART. Data is read from both UART's through the I/O data bus. The I/O data bus also brings microprocessor generated output data to the left UART. The UART reads this data and applies serial output to an ARINC 429 low-speed transmitter. The transmitted R-PFD-1 data bus is applied to the 2A and 2B concentrators in the IAPS.

The PFD also receives ARINC 429 high-speed data bus inputs from both attitude heading systems. These two buses are applied to the right ND as well. Note that these are not the same buses that are applied to the left PFD/ND. The L-AHC-3 and the R-AHC-2 buses are input through a receiver and multiplexed to the receive port of a UART. Data is read from the UART through the I/O data bus. The EFD contains two additional data bus input circuits which connect to the AHC multiplexer. These circuits are not used in the PFD configuration.

Several discrete inputs are applied to the PFD and read by the microprocessor through the I/O data bus. These discretes are the four configuration inputs, two reversionary switch inputs, and two unused inputs. All eight inputs are diode isolated and tied to a pullup resistor.

The four configuration inputs report to internal software the EFD function (PFD/ND/ECD/MFD) as installed in the aircraft. For the copilot PFD configuration, inputs 1 and 2 are open and inputs 3 and 4 are tied to reversionary switch S209. This switch grounds input 3 in the CMPST UP setup and grounds input 4 in the CMPST DN setup. Normally, both input 3 and input 4 are open. In the CMPST UP setup, the PFD displays PFD/ND composite data and the ND is blank. In the CMPST DN setup, the PFD is blank and the ND displays composite PFD/ND data. These setups are used if one of the displays is malfunctioning.

The two reversionary switch inputs select cross-side attitude heading data and cross-side CDU control. Switch S211 applies a ground input to the PFD (and to the right ND) when set to the AHRS X-SIDE position. At this position, the PFD uses attitude heading data from the left side AHC. Normally, this input is open and the PFD uses attitude heading data from the right (onside) AHC. Switch S210 applies a ground input to the PFD (and to the right ND) when set to the CDU X-SIDE position. At this position, the PFD (and ND) are controlled by the left side CDU. Normally, this input is open and the PFD is controlled by the right (onside) CDU. Switch S210 is wired so that it also reports X-CDU selection to the onside CDU.

The two unused discrete inputs are used in other configurations of the EFD, but are not connected in the PFD configuration.

Internal EFD operation is described on a previous page.

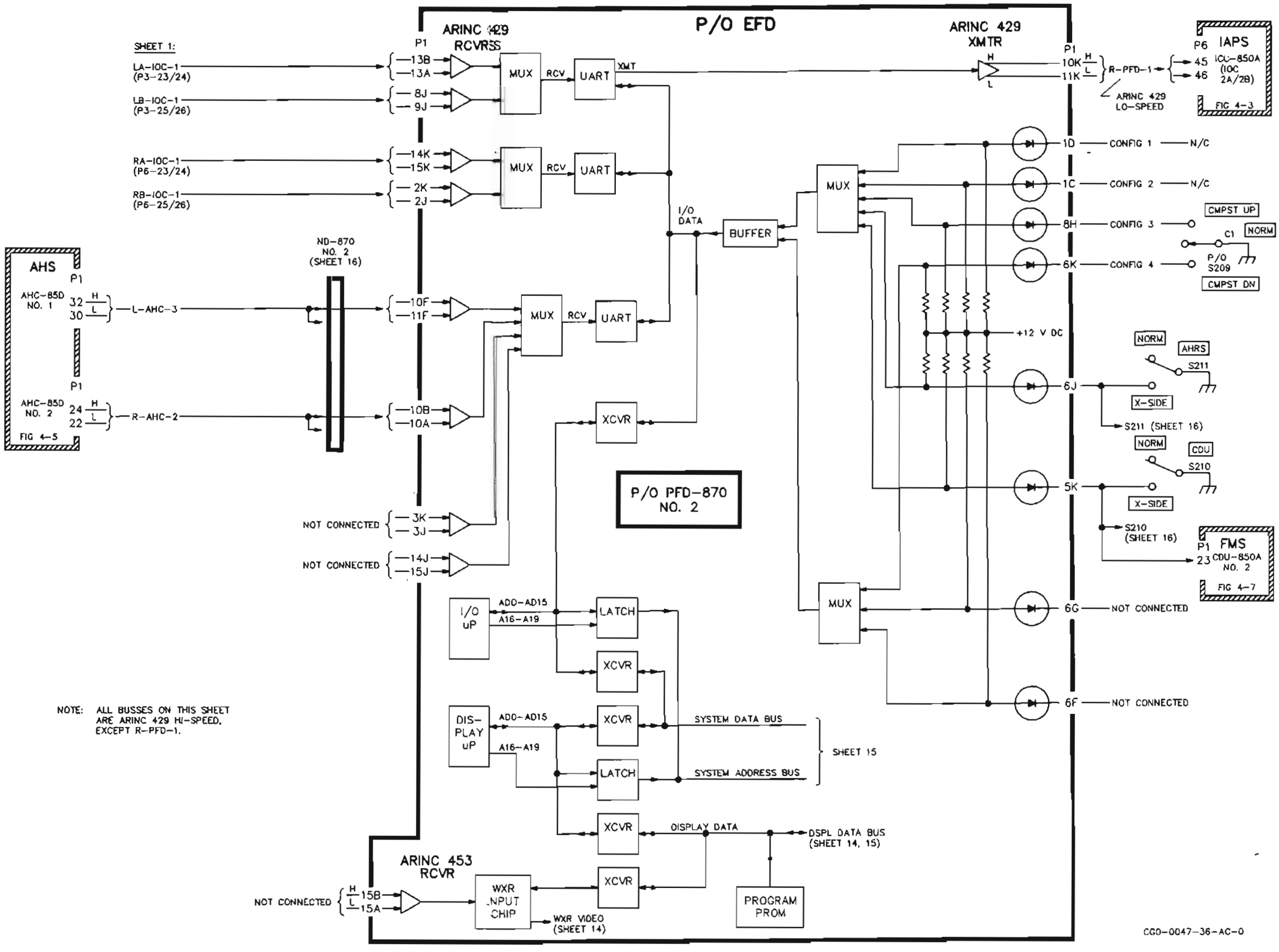

NOTE: ALL BUSSES ON THIS SHEET ARE ARINC 429 HI-SPEED, EXCEPT R-PFD-1.

IDS System Schematic
Figure 4-2-1 (Sheet 13 of 21)

Refer to figure 4-2-1, sheet 14.

The right PFD is powered by the no. 2 +28-V dc aircraft supply. Internal EFD operation is described on a previous page.

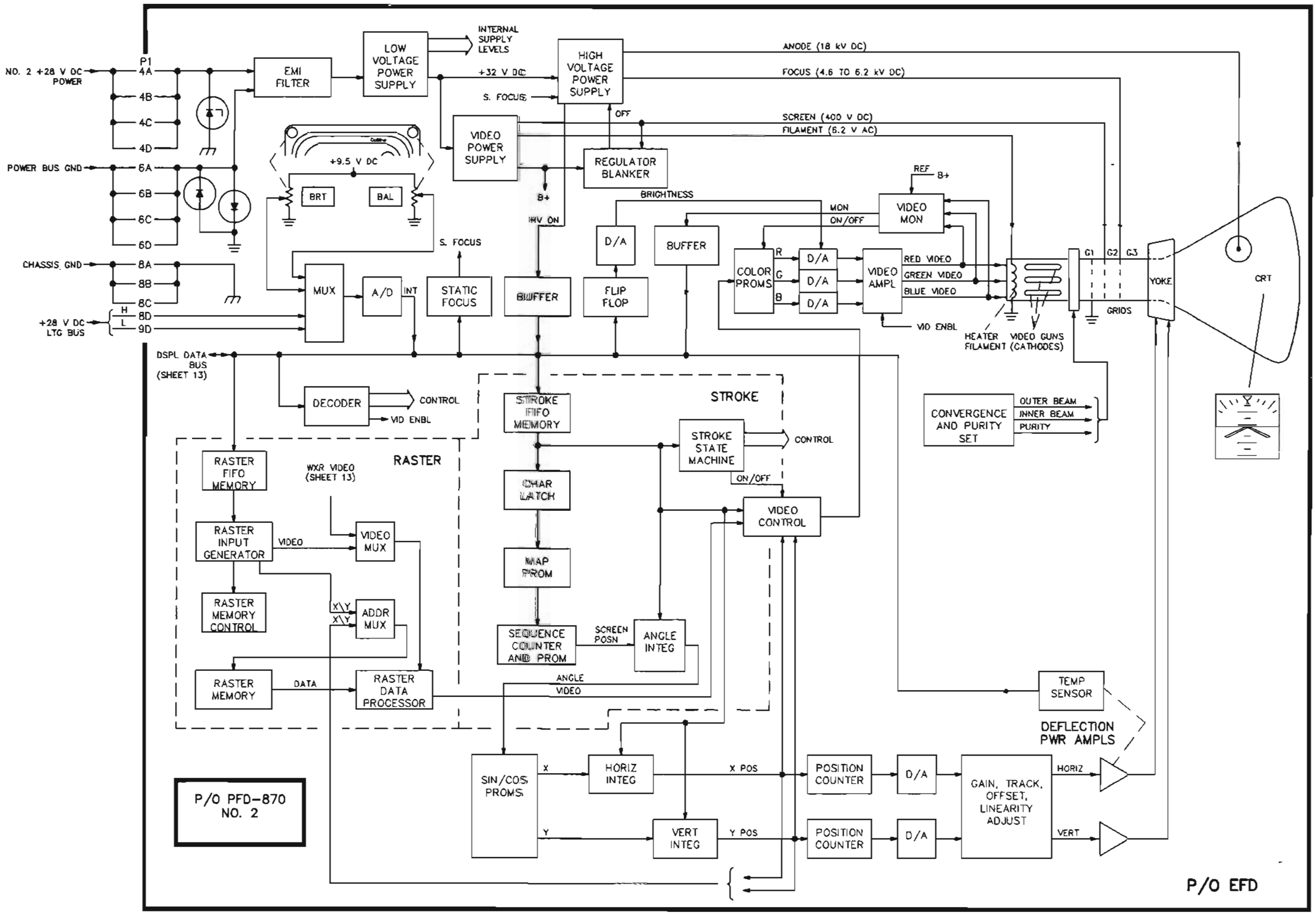

CGO-0047-36-AC-0

IDS System Schematic
Figure 4-2-1 (Sheet 14 of 21)

Refer to figure 4-2-1, sheet 15.

The right PFD is configured using an MEM memory module and a BZL bezel. This sheet shows the MEM and BZL circuits.

The MEM contains system RAM, system PROM, and a line decoder. This memory contains the "PFD" configuration algorithms. These algorithms will not be detailed here, but it is important to note that the correct MEM must be installed before the unit can function as a PFD.

The system address bus allows both the I/O and the display microprocessors (in the EFD) access to the RAM and PROM. The addressed data output from this memory is loaded onto the system data bus for use by either processor. A line decoder is addressed to generate the required internal chip enables. All power and control for the MEM is supplied from the EFD.

The BZL contains interlock strapping and the PFD inclinometer. The interlocks report BZL type to the display microprocessor. Lighting power is supplied by the 115-V ac lighting bus; this bus is routed through the EFD to provide backlighting for the BZL.

The BZL provides interlock strap and pushbutton action (not applicable to PFD) data to the display microprocessor through an encoder/buffer circuit. The pushbutton part of this circuit is not used on this BZL, but is briefly described here for completeness. The encoder/buffer circuit applies +5-V dc strobe voltages to five input pins on the BZL. These voltages normally are applied to one side of a pushbutton switch. The four sense lines normally are wired to the other side of the switches, so that any pushbutton action is detected and encoded onto the display data bus.

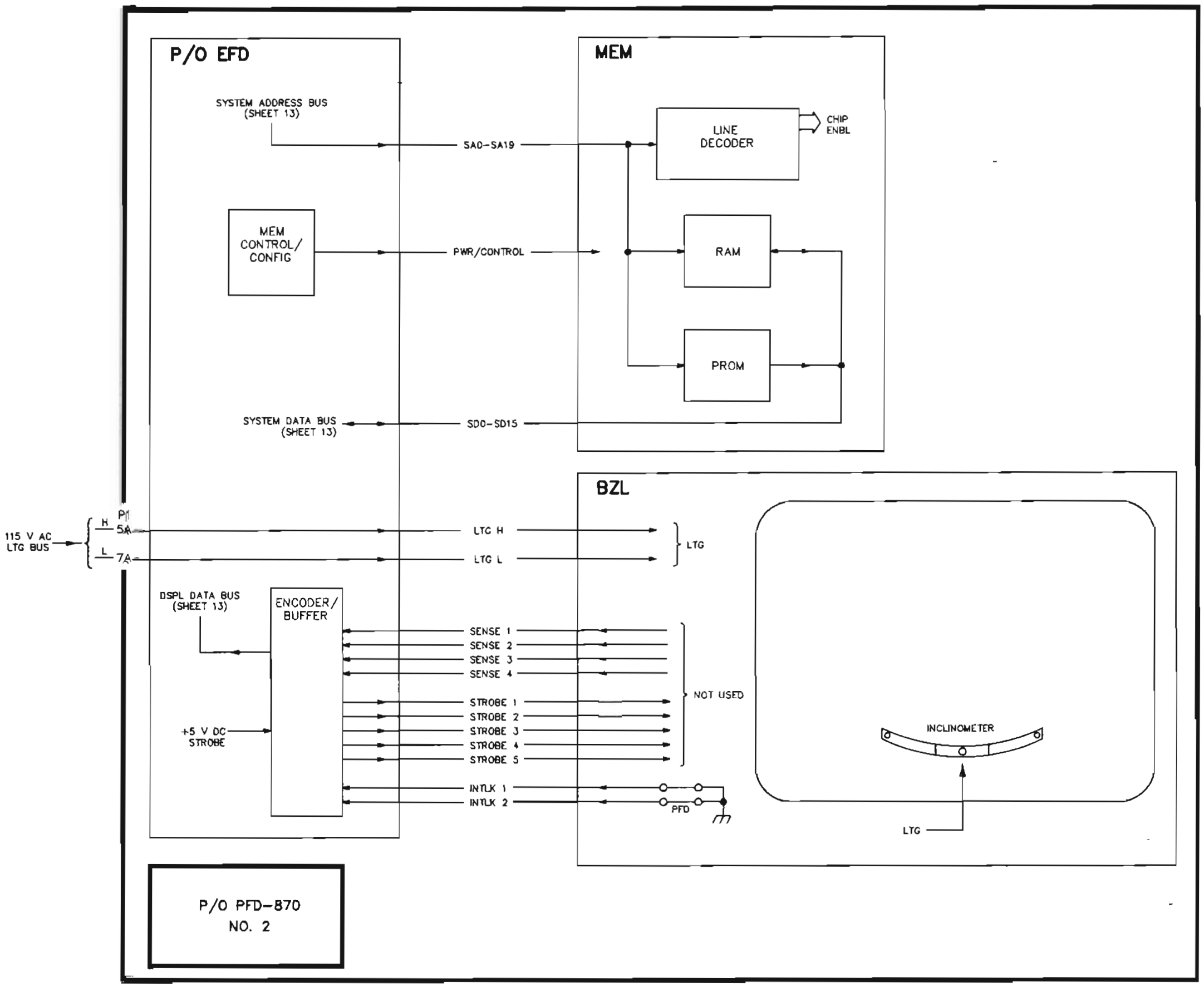

IDS System Schematic
Figure 4-2-1 (Sheet 15 of 21)

The copilot ND-870 consists of an EFD electronic flight display, an MEM memory module, and a BZL bezel. The ND is a single LRU at the flight-line maintenance level, but is broken into the EFD/MEM/BZL components for training purposes. Refer to figure 4-2-1, sheet 16.

The right ND receives ARINC 429 high-speed data bus inputs from each of the four input/output concentrators in the IAPS system. The LA-IOC-1 and the LB-IOC-1 buses are from the left side of the IAPS. The RA-IOC-1 and the RB-IOC-1 buses are from the right side of the IAPS. Each pair of buses is input through a receiver and multiplexed to the receive port of a UART. Data is read from both UART's through the I/O data bus. The I/O data bus also brings microprocessor generated output data to the left UART. The UART reads this data and applies serial output to an ARINC 429 low-speed transmitter. The transmitted R-ND-1 data bus is applied to the 2A and 2B concentrators in the IAPS.

The ND also receives ARINC 429 high-speed data bus inputs from both attitude heading systems. Note that these are not the same buses that are applied to the left ND. The L-AHC-3 and the R-AHC-2 buses are input through a receiver and multiplexed to the receive port of a UART. Data is read from the UART through the I/O data bus. The EFD contains two additional data bus input circuits which connect to the AHC multiplexer. These circuits are not used in the ND configuration.

Several discrete inputs are applied to the ND and read by the microprocessor through the I/O data bus. These discretes are the four configuration inputs, two reversionary switch inputs, and two unused inputs. All eight inputs are diode isolated and tied to a pullup resistor.

The four configuration inputs report to internal software the EFD function (PFD/ND/ECD/MFD) as installed in the aircraft. For the copilot ND configuration, input 1 is hard wired to ground, input 2 is open, and inputs 3 and 4 are tied to reversionary switch S209. This switch grounds input 4 in the CMPST UP setup and grounds input 3 in the CMPST DN setup. Normally, both input 3 and input 4 are open. In the CMPST UP setup, the PFD displays PFD/ND composite data and the ND is blank. In the CMPST DN setup, the PFD is blank and the ND displays composite PFD/ND data. These setups are used if one of the displays is malfunctioning.

The two reversionary switch inputs select cross-side attitude heading data and cross-side CDU control. Switch S211 applies a ground input to the ND when set to the AHRS X-SIDE position. At this position, the ND uses attitude heading data from the left side AHC. Normally, this input is open and the ND uses attitude heading data from the right (onside) AHC. Switch S210 applies a ground input to the ND when set to the CDU X-SIDE position. At this position, the ND is controlled by the left side CDU. Normally, this input is open and the ND is controlled by the right (onside) CDU.

The two unused discrete inputs are used in other configurations of the EFD, but are not connected in the ND configuration.

Internal EFD operation is described on a previous page.

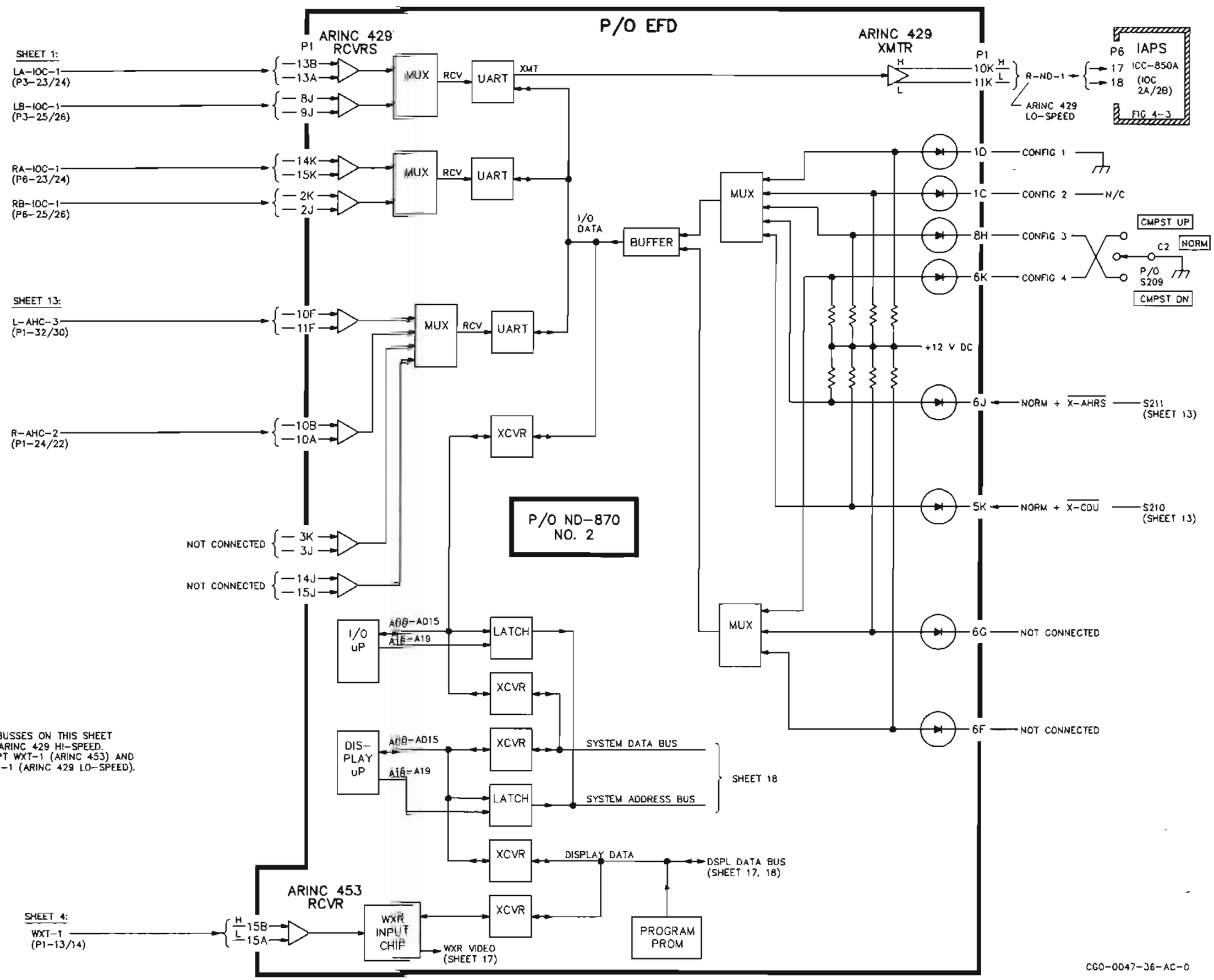

IDS System Schematic
Figure 4-2-1 (Sheet 16 of 21)

Refer to figure 4-2-1, sheet 17.

The right ND is powered by the no. 2 +28-V dc aircraft supply. Internal EFD operation is described on a previous page.

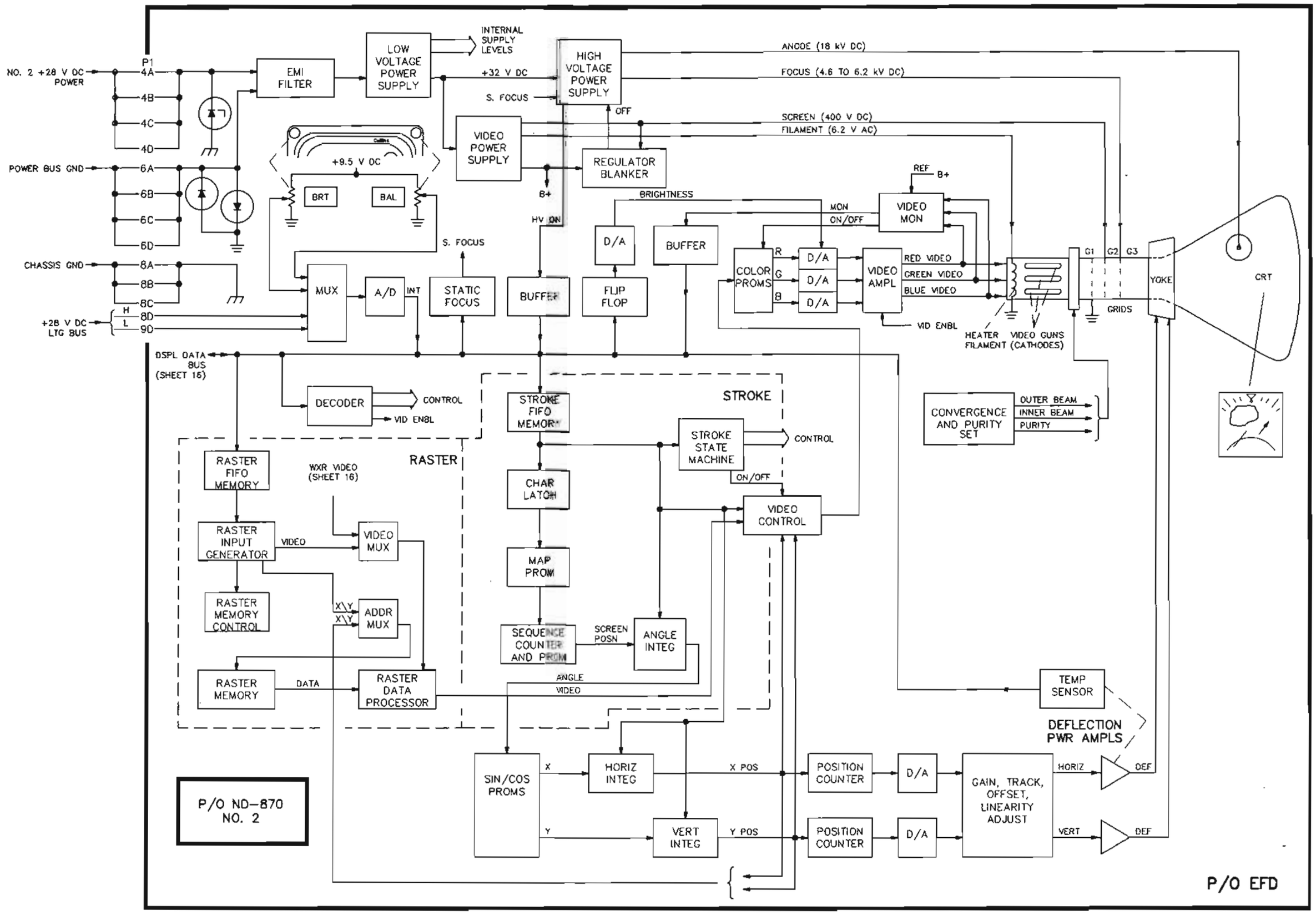

IDS System Schematic
Figure 4-2-1 (Sheet 17 of 21)

Refer to figure 4-2-1, sheet 18.

The right ND is configured using an MEM memory module and a BZL bezel. This sheet shows the MEM and BZL circuits.

The MEM contains system RAM, system PROM, and a line decoder. This memory contains the "ND" configuration algorithms. These algorithms will not be detailed here, but it is important to note that the correct MEM must be installed before the unit can function as an ND.

The system address bus allows both the I/O and the display microprocessors (in the EFD) access to the RAM and PROM. The addressed data output from this memory is loaded onto the system data bus for use by either processor. A line decoder is addressed to generate the required internal chip enables. All power and control for the MEM is supplied from the EFD.

The BZL contains interlock strapping. The interlocks report BZL type to the display microprocessor. No lighting bus is required by the ND.

The BZL provides interlock strap and pushbutton action (not applicable to ND) data to the display microprocessor through an encoder/buffer circuit. The pushbutton part of this circuit is not used on this BZL, but is briefly described here for completeness. The encoder/buffer circuit applies +5-V dc strobe voltages to five input pins on the BZL. These voltages normally are applied to one side of a pushbutton switch. The four sense lines normally are wired to the other side of the switches, so that any pushbutton action is detected and encoded onto the display data bus.

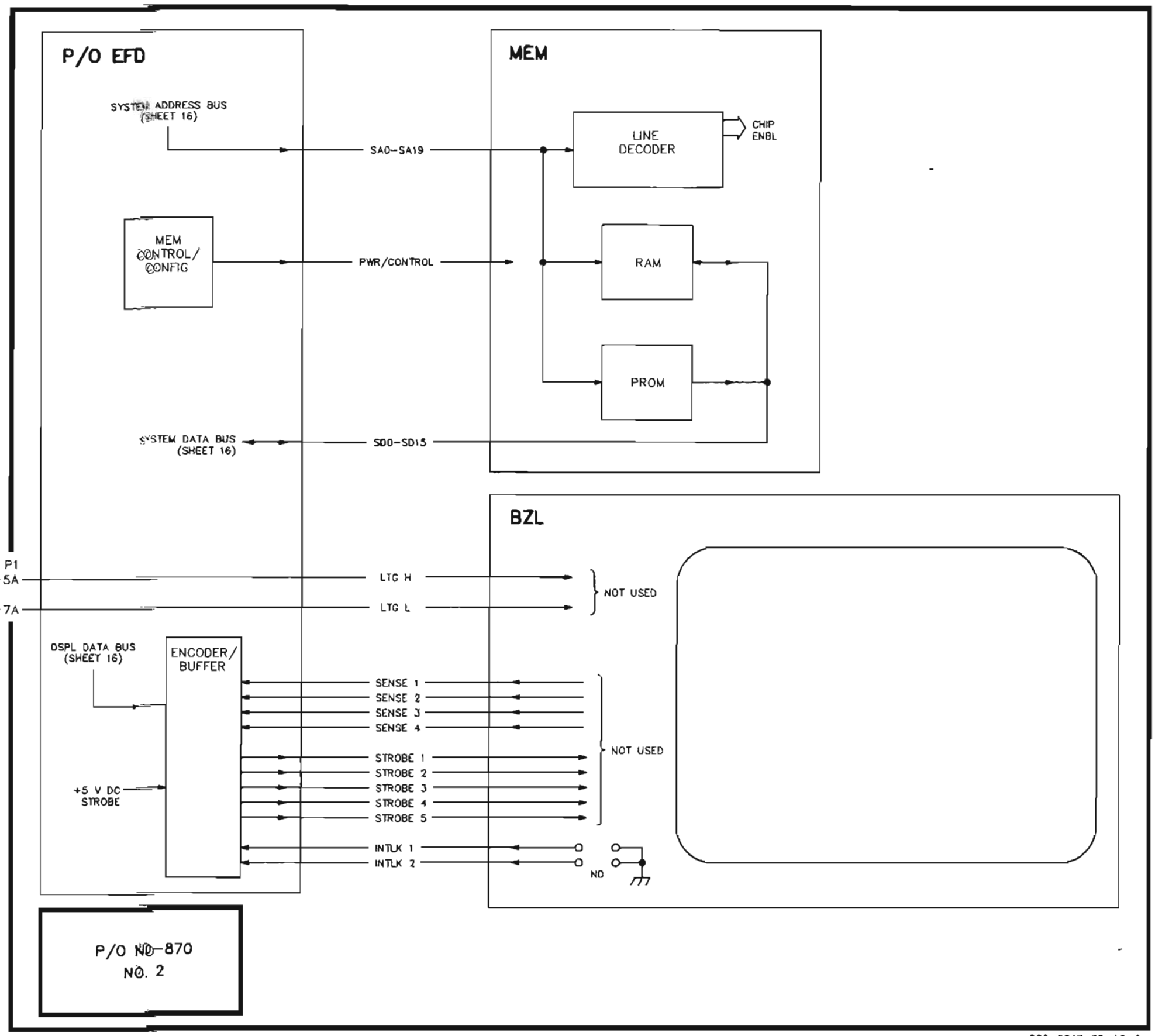

IDS System Schematic
Figure 4-2-1 (Sheet 18 of 21)

The no. 1 SDU-640A displays left side navigation and sensor data. Refer to figure 4-2-1, sheet 19.

The left SDU is powered by the no. 1 +28-V dc aircraft supply. A zener diode regulates the power input, which is applied to the low-voltage power supply. The low-voltage power supply generates internally required voltage levels and provides drive for the video power supply. The video power supply generates additional voltage levels required by the video circuits. The video power supply also generates the focus (0- to 300-V dc), screen (400-V dc), and filament (heat) outputs to the crt. A power output is provided to the high-voltage regulator.

The high-voltage regulator provides drive to the high-voltage power supply. A feedback (V sense) line provides a monitor return used to regulate the amount of drive. The high-voltage supply output is the anode (8-kV dc) level applied to the crt. A power monitor circuit provides a shutdown control, which disables the high-voltage supply (blanks the display) if power limits or phosphor protect limits are exceeded.

A single microprocessor controls SDU operation. This processor strobes the FORMAT and pointer knobs (to detect knob motion and position), generates video gate logic, provides port address to the program memory, and controls both I/O and display functions using an 8-bit bidirectional data bus. Front panel knob data is directly monitored by a dedicated port of the microprocessor. Video gate logic (VG 1/2) is generated and applied as control input to the cathode drive circuits. The port address output allows the processor to access the program PROM.

The AD0-AD7 bidirectional data bus provides microprocessor generated information to a control decoder and to the character generator (through a transceiver). The data bus also gathers program memory data and SDD TO SDU-1 input data for use by the microprocessor.

The control decoder circuit reads the AD0-AD7 data bus and applies control and enable logic to various devices in the SDU. The character generator provides the display function and is described in a subsequent paragraph. Program memory contains executable routines for the SDU; this function is represented by the program PROM block. The SDD TO SDU-1 input data bus is applied from the left channel of the sensor display driver. This bus brings the navigation and sensor information to the SDU. The SDD TO SDU-1 data bus is input through an ARINC 429 low-speed receiver, converted to parallel format, and buffered through a FIFO (first in first out) memory onto the AD0-AD7 microprocessor data bus.

The character generator is a stroke draw circuit which provides the video drive to illuminate images on the screen. A transceiver provides data transfer between the microprocessor (AD0-AD7) and the stroke draw circuits (B0-B7). Character select and character offset angle display information is decoded from the microprocessor bus.

The character select information is applied to a character address sequencer. This circuit is clocked by the draw time counter to count out the address of the selected character. Character PROM's "look up" the character associated with this address and apply the appropriate video, timing, and draw angle outputs. The character video is applied to the video gate circuit to be used in applying cathode drive to the crt. Timing associated with the selected character is applied as a control input to the draw time counter. This counter applies an integrator output used to clock the character address sequencer and to activate an integrator select circuit. The character draw angle output is applied to an adder circuit.

The adder circuit sums the character offset angle information with the character draw angle to produce the display angle (theta). Sin/cos PROM's convert the display angle input into sine θ and cosine θ outputs. A control output is also applied to the integrator select circuit. The sine data from the PROM is digital-to-analog converted and applied to the horizontal integrator. This integrator is controlled by a left/right enable from the integrator select circuit and applies a horizontal position voltage to the deflection circuits. The cosine θ PROM output is similarly d/a converted and integrated to apply a vertical position voltage to the deflection circuits. The vertical integrator is controlled by an up/down enable from the integrator select circuit.

The horizontal and vertical position voltages are then adjusted for proper offset, gain, and linearity. The resultant horizontal and vertical screen position voltages are then converted to current outputs by the deflection power amplifiers. These current outputs are applied to the yoke of the crt assembly and deflect the electron beam to the proper X and Y coordinates on the screen.

Character video (from the character generator), VG 1/2 video gate logic (from the microprocessor), and vertical deflection return (from the yoke) are applied

to the video gates. The video gates produce the cathode drive after an appropriate delay, so that the cathode drive and the deflection outputs are simultaneously applied to the crt assembly.

The delayed video (cathode drive) is applied through a video amplifier to the crt cathode. Video amplifier bias is controlled by an intensity circuit, as described below.

The front panel DIM knob input and the +28-V dc lighting bus input are applied to an intensity control circuit. This circuit provides analog screen intensity bias output to the video amplifier.

The vertical deflection return voltage (from the yoke) and a +24-V dc power reference level are monitored to protect the crt and to report SDU failure to the sensor display driver. The vertical deflection return is monitored by a phosphor protect circuit. If the return voltage becomes excessive, damage to the crt may result and the phosphor protect circuit trips the power monitor. If power becomes too low, the +24-V dc reference level drops and trips the power monitor. When either of these conditions occurs, the power monitor shuts down the high-voltage regulator (to prevent damage to the crt) and toggles a transistor to report a fail condition to the SDD. The pullup resistor for this discrete is located in the SDD.

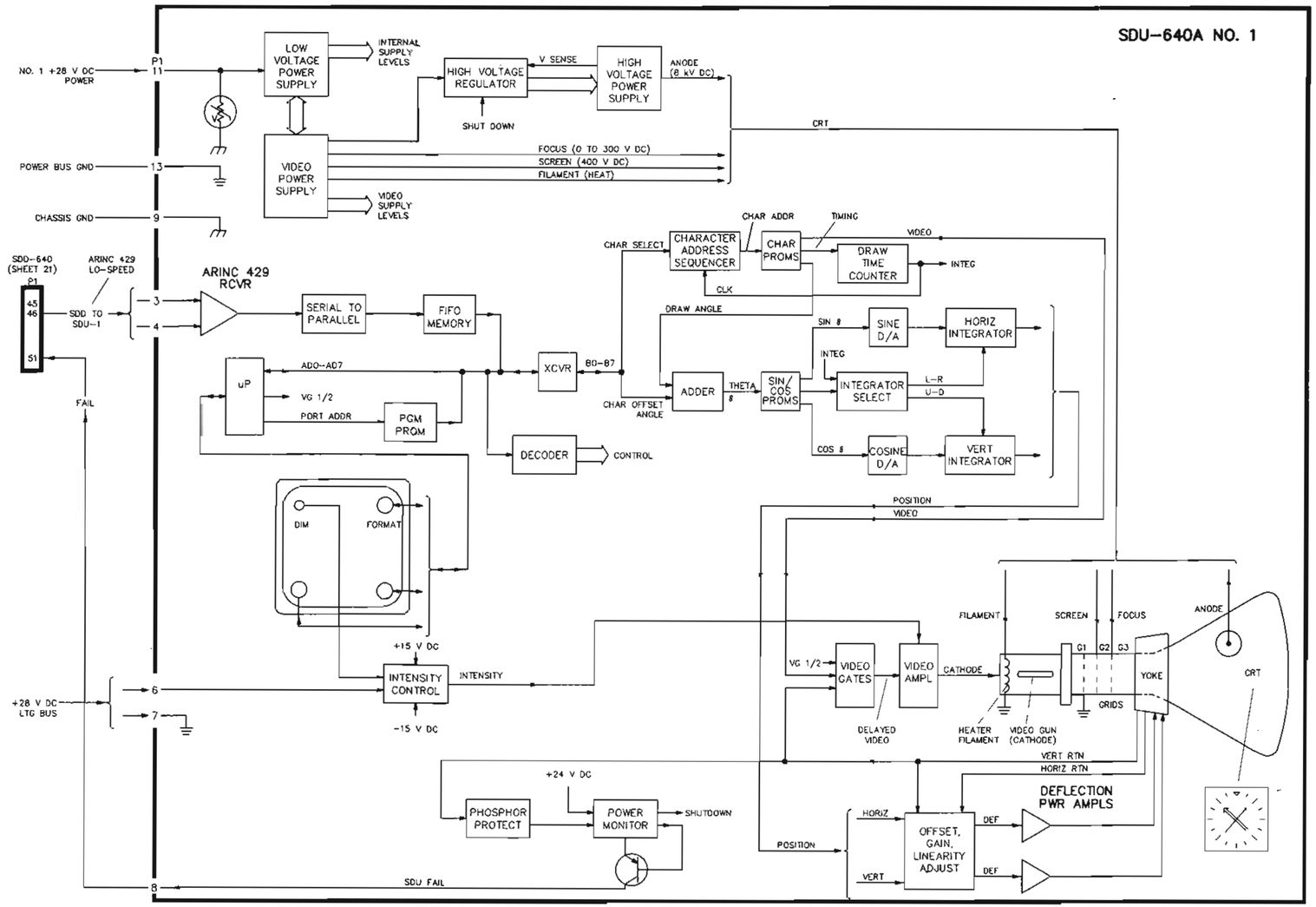

IDS System Schematic
Figure 4-2-1 (Sheet 19 of 21)

The no. 2 SDU-640A displays right side navigation and sensor data. Installation of this unit is optional. Refer to figure 4-2-1, sheet 20.

The right SDU is powered by the no. 2 +28-V dc aircraft supply. The SDD TO SDU-2 bus brings navigation and sensor data from the right channel of the SDD. Internal SDU operation is described on a previous page.

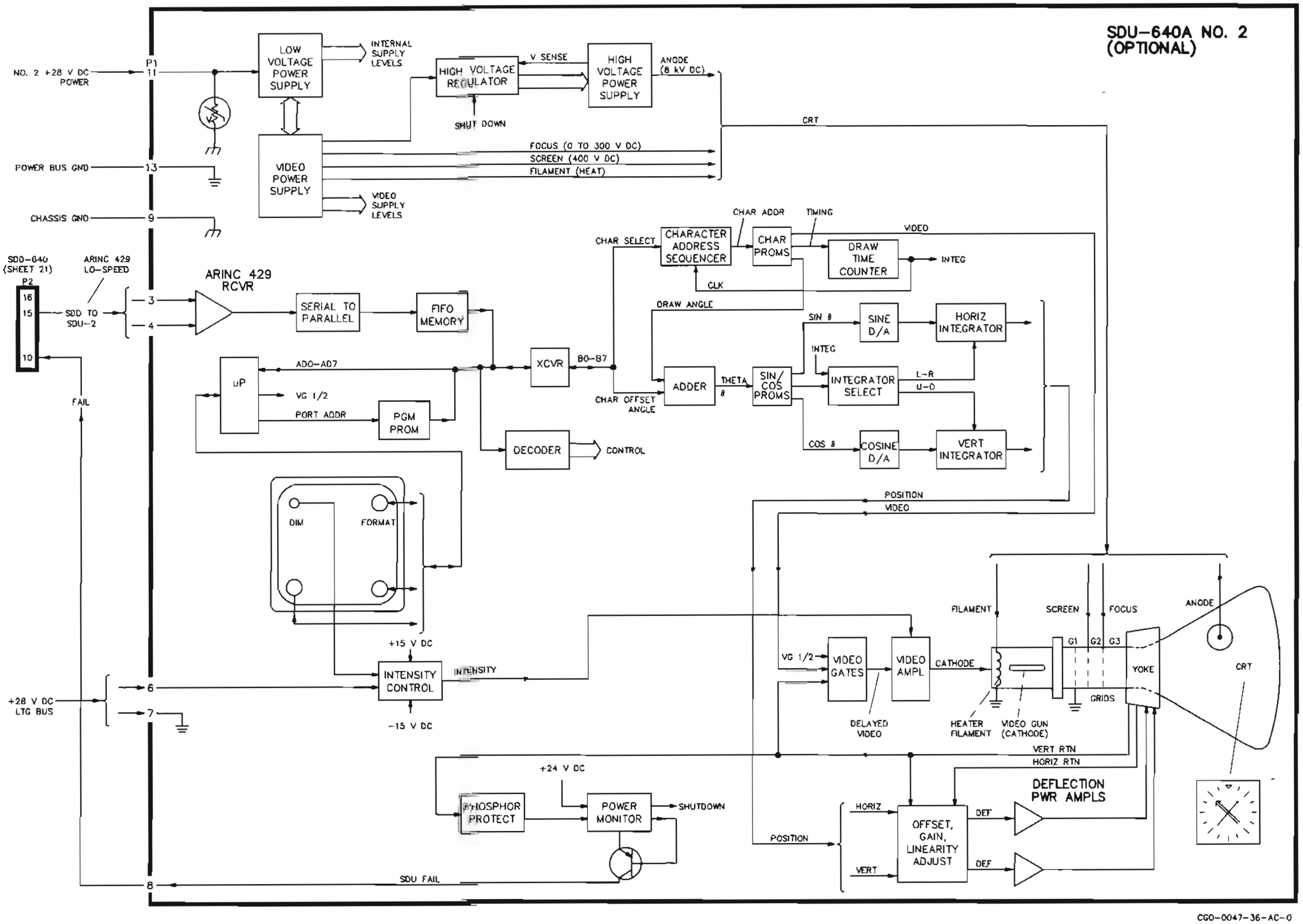

IDS System Schematic
Figure 4-2-1 (Sheet 20 of 21)

The SDD-640 concentrates navigation and sensor data into an output bus applied to the SDU displays. Refer to figure 4-2-1, sheet 21.

The SDD contains two functionally identical and independent channels. The only connection between the two channels is a cross-channel NAV data bus. The left channel provides SDD functions for the pilot SDU. The right channel provides SDD functions for the copilot SDU. The left channel will be described first.

A microprocessor controls the operation of the left channel through the AD0-AD7 data bus. This bus gathers navigation/sensor input data, program memory data, and strap data for use by the microprocessor. The AD0-AD7 bus also carries microprocessor generated data to RAM (scratch pad) and to the ARINC UART.

The left channel of the SDD receives ARINC 429 low-speed data bus inputs from the left NAV receivers and from one of the left side IAPS input/output concentrators. The L-ADF-2, L-DME-2, L-VIR-2, L-VLF-2, and LB-GP BUS-2 data buses are input through ARINC receivers and applied to a multiplexer. The multiplexer output is buffered onto the AD0-AD7 data bus.

The cross-side attitude heading system applies an ARINC 429 high-speed data bus to the left channel of the SDD. (Note that cross-side AHS data is received and will be displayed by the sensor display unit.) The R-AHC-3 bus is input through an ARINC receiver and applied to the receive port of a UART. Data is read from the UART and buffered onto the AD0-AD7 data bus.

Navigation and sensor input data is processed and formatted into display output data. Addressable RAM and PROM memory (A8-A15) support the microprocessor in performing this function. The PROM contains the program memory, and the RAM provides scratch-pad memory.

Strap data is read by the microprocessor from a latch circuit. Rear connector pins are hard wired to ground according to which input buses are applied to the SDD. The left channel is wired so that the ADF, DME, NAV, LRN, and GP BUS pins are grounded. This tells the microprocessor what NAV data should be available to that channel of the SDD.

Processed display output data is loaded onto the AD0-AD7 bus and latched for use by the ARINC UART. The UART reads this data and applies serial output to an ARINC 429 low-speed transmitter. The transmitted SDD TO SDU-1 data bus is applied to the left SDU.

The microprocessor directly reads the "fail" input from the left SDU. This "fail" discrete is normally a ground dc level when no fail condition exists, and switches to greater than +9 V dc or open if the SDU senses an internal failure. The pullup resistor for this discrete is inside the SDD.

The two microprocessors transmit received navigation (only) data to each other on cross-channel data buses. Therefore, both SDD TO SDU output buses contain appropriate pilot and copilot NAV data.

The left channel of the SDD is powered by the no. 1 +28-V dc aircraft supply. An internal power supply generates all voltage levels required by the left channel circuits. This power supply is completely independent from the right channel power supply.

The right channel of the SDD is described below.

A microprocessor controls the operation of the right channel through the AD0-AD7 data bus. This bus gathers navigation/sensor input data, program memory data, and strap data for use by the microprocessor. The AD0-AD7 bus also carries microprocessor generated data to RAM (scratch pad) and to the ARINC UART.

The right channel of the SDD receives ARINC 429 low-speed data bus inputs from the right NAV receivers and from one of the right side IAPS input/output concentrators. The R-ADF-2 (if two ADF-462's are installed), R-DME-2, R-VIR-2, and RB-GP BUS-2 data buses are input through ARINC receivers and applied to a multiplexer. The multiplexer output is buffered onto the AD0-AD7 data bus.

The cross-side attitude heading system applies an ARINC 429 high-speed data bus to the right channel of the SDD. (Note that cross-side AHS data is received and will be displayed by the sensor display unit.) The L-AHC-3 bus is input through an ARINC receiver and applied to the receive port of a UART. Data is read from the UART and buffered onto the AD0-AD7 data bus.

Navigation and sensor input data is processed and formatted into display output data. Addressable RAM and PROM memory (A8-A15) support the microprocessor in performing this function. The

PROM contains the program memory, and the RAM provides scratch-pad memory.

Strap data is read by the microprocessor from a latch circuit. Rear connector pins are hard wired to ground according to which input buses are applied to the SDD. The right channel is wired so that the ADF (if two ADF's are installed), DME, NAV, and GP BUS pins are grounded. The LRN strap is not connected, since an LRN data bus is not applied to the right channel of the unit. Strapping tells the microprocessor what NAV data should be available to that channel of the SDD.

Processed display output data is loaded onto the AD0-AD7 bus and latched for use by the ARINC UART. The UART reads this data and applies serial output to an ARINC 429 low-speed transmitter. The transmitted SDD TO SDU-2 data bus is applied to the right SDU (if installed).

The microprocessor directly reads the "fail" input from the right SDU. This "fail" discrete is normally a ground dc level when no fail condition exists, and switches to greater than +9 V dc or open if the SDU senses an internal failure. The pullup resistor for this discrete is inside the SDD.

The right channel of the SDD is powered by the no. 2 +28-V dc aircraft supply. An internal power supply generates all voltage levels required by the right channel circuits. This power supply is completely independent from the left channel power supply.

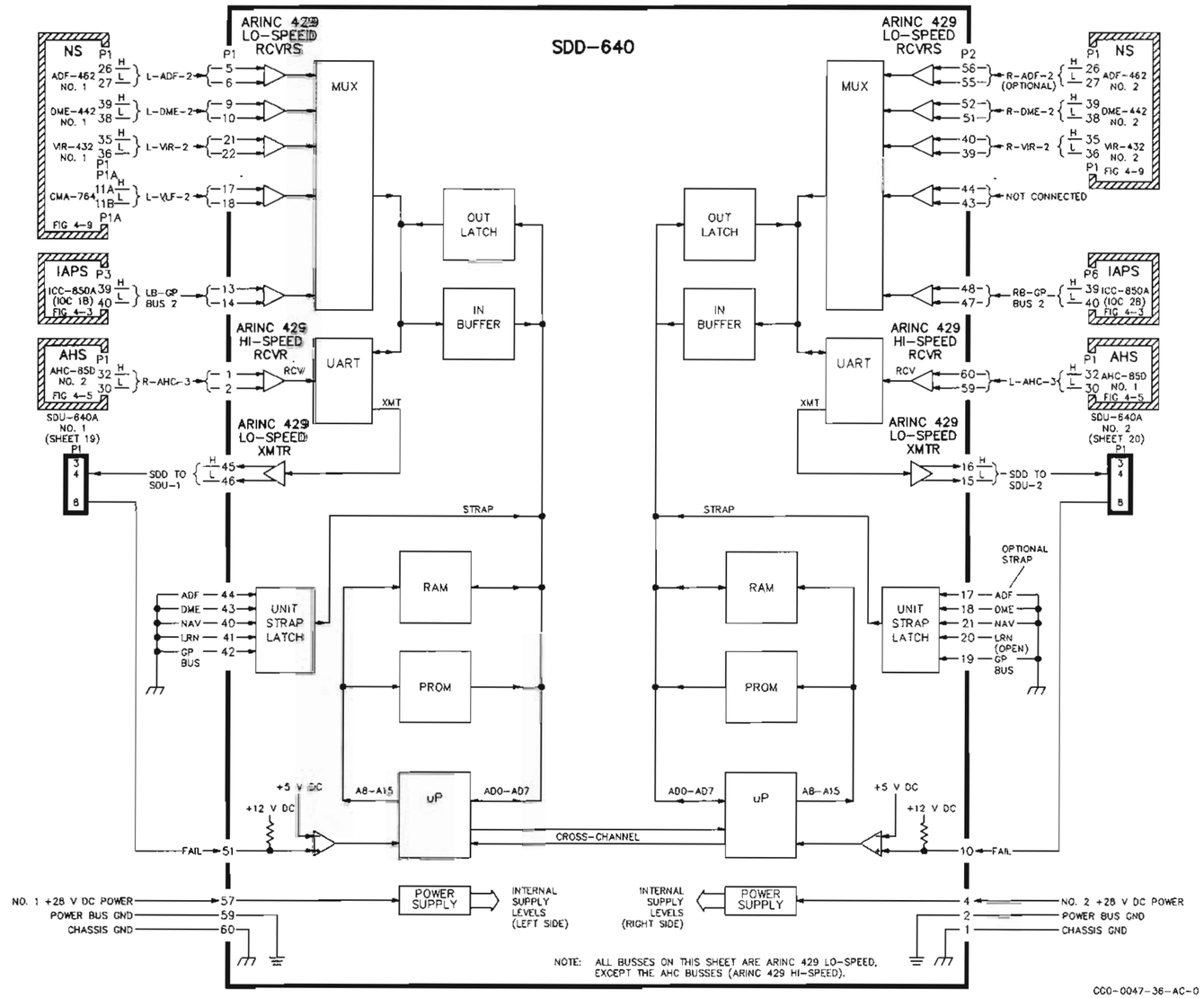

IDS System Schematic
Figure 4-2-1 (Sheet 21 of 21)

This page intentionally left blank.

4.3.2 IAPS (Integrated Avionics Processor System)

4.3.2.1 Overview

The IAPS performs part of the integration function required to interface the various avionics systems on the aircraft. The IAPS may be thought of as part of the wiring harness and physically houses some of the avionics LRU's.

The IAPS assembly includes four input/output data concentrators, four power supplies, two flight control computers, and three flight management computer/couplers, all mounted in one card cage. Refer to figure 4-3. Each LRU in the IAPS is described below:

ICC-850A	IAPS Card Cage
IOC-851 1A	I/O Concentrator (pilot side, channel A)
IOC-851 1B	I/O Concentrator (pilot side, channel B)
IOC-851 2A	I/O Concentrator (copilot side, channel A)
IOC-851 2B	I/O Concentrator (copilot side, channel B)
PWR-851 1A	IAPS Power Supply (pilot side, channel A)
PWR-851 1B	IAPS Power Supply (pilot side, channel B)
PWR-851 2A	IAPS Power Supply (copilot side, channel A)
PWR-851 2B	IAPS Power Supply (copilot side, channel B)
*FCC-850	Flight Control Computer (quantity 2)
*FMC-851A	Flight Management Computer
*FMC-852A	Navigation Computer
*CDC-850A	Control Display Coupler

*These units are physically located in the IAPS card cage, but are documented in this manual as part of the FCS and FMS systems.

The ICC-850A is the card cage which houses the concentrators, power supplies, and resident computers. An internal interconnect board provides connections between all units within the card cage. Six 50-pin connectors provide all I/O interface between internal units and external units.

The IOC-851 1A module is one of the left (pilot) side input/output data concentrators. This module receives data bus inputs from the following left side systems: IDS, ADS, AHS, FCS, FMS, CS, NS, and ADAS. The data is concentrated, and data bus outputs are applied to the following systems: IDS, ADS, ADAS, FMS, CS, and FCS.

The IOC-851 1B module is the other left (pilot) side input/output data concentrator. This module receives the same left side data bus inputs that are applied to the 1A concentrator. The data is concentrated, and data bus outputs are applied to the following systems: IDS, FMS, FCS, CS, NS, and WXR.

The IOC-851 2A module is one of the right (copilot) side input/output data concentrators. This module receives data bus inputs from the following right side systems: IDS, ADS, AHS, FCS, FMS, CS, NS, and ADAS. The data is concentrated, and data bus outputs are applied to the following systems: IDS, ADS, CS, FMS, and FCS.

The IOC-851 2B module is the other right (copilot) side input/output data concentrator. This module receives the same right side data bus inputs that are applied to the 2A concentrator. The data is concentrated, and data bus outputs are applied to the following systems: IDS, FMS, FCS, CS, NS, and WXR.

The PWR-851 1A module is one of the left (pilot) side power supply modules. This module provides power to the IOC-851 1A and the left (no. 1) FCC-850. A special isolated power output is also provided to the left MSP-850A (part of FCS).

The PWR-851 1B module is the other left (pilot) side power supply module. This module provides power to the IOC-851 1B, the FMC-851A, and the FMC-852A. A special isolated power output is also provided to the DBU-850 (part of FMS).

The PWR-851 2A module is one of the right (copilot) side power supply modules. This module provides power to the IOC-851 2A and the right (no. 2) FCC-850. A special isolated power output is also provided to the right MSP-850A (part of FCS).

The PWR-851 2B module is the other right (copilot) side power supply module. This module provides power to the IOC-851 2B and the CDC-850A. A special isolated power output is reserved for future expansion of the FMS system.

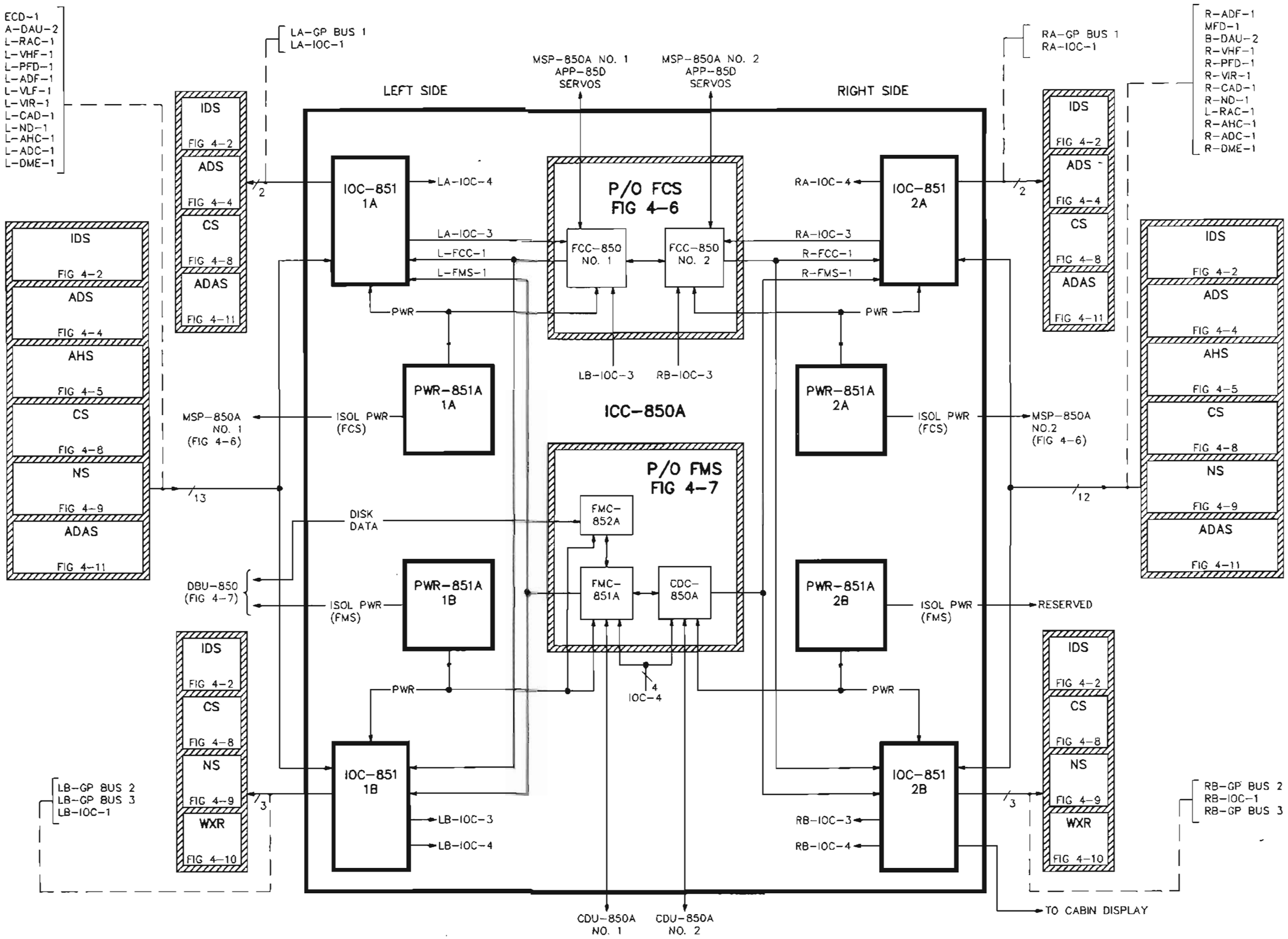

IAPS (Integrated Avionics Processor System) Overview
Figure 4-3

4.3.2.2 System Schematic

Refer to figure 4-3-1, sheet 1. This sheet shows the left side ICC-850A card cage circuits. The pilot IAPS data is interfaced with various external systems through the connectors shown on this sheet. External system data is routed through a protection interface circuit in the ICC and input to or output from the appropriate IOC or PWR. The left side modules are the 1A IOC, the 1B IOC, the 1A PWR, and the 1B PWR. Resident computers housed in this portion of the ICC are the FCC-850 no. 1 flight control computer (FCS system) and the FMC-851A/852A no. 1 flight management computer (FMS system).

The left side IAPS circuits derive power from the no. 1 FCS and FMS +28-V dc aircraft supplies. +28-V dc power is input to two separate pairs of pins. Each of these power inputs is individually (lightning) protected by an MOV varistor, emi filtered by an LC network, and applied through an isolation diode to either the 1A or the 1B PWR module. These PWR modules generate the supply levels required by the internal cards.

All data going into or out of the ICC passes through an interface circuit. Data buses interface through a zener diode circuit for transient protection. The FCS/FMS isolated power, servo motor, and trim lines interface through a similar zener protection circuit. Discrete I/O passes through a series resistor. Note that all data flow through the interface circuits has been horizontally aligned on the drawing for ease of use.

All data bus inputs from external systems are received through the interface circuit and then applied to both the 1A and the 1B input/output data concentrators to provide redundancy. Since the FCC and the FMC computers are physically located inside the ICC, the data bus outputs from these units are applied directly to the data concentrators (not brought out of the ICC).

All data bus outputs from the IOC input/output concentrators are applied through the interface circuit to the LRU's specified on the drawing. An asterisk (*) on the drawing denotes ARINC 429 high-speed data buses; other data buses are ARINC 429 low-speed buses. Note that "GP" output buses are general purpose buses and are applied to more than one external system.

J13 contains the left side program straps. This connector provides hard grounds which set the aircraft configuration and options. These connector pin numbers are not specified here, since they are not to be altered by unauthorized personnel. The left program straps are applied to both the 1A/1B concentrators (for redundancy).

The no. 1 FCC receives the following IAPS inputs: power, power valid, L-AHC-1 data, LA-IOC-3 data, and LB-IOC-3 data. The 1A PWR provides FCC operating power and a power valid logic input. L-AHC-1 attitude heading data is input to the FCC as well as to both left side IOC's. The LA-IOC-3 and the LB-IOC-3 data buses provide redundant concentrated data input to the FCS system from the 1A and the 1B IOC's respectively. The L-FCC-1 data output bus is applied to both the 1A and the 1B concentrators (for redundancy). FCC communication with other units in the FCS system is indicated on the drawing by the wide, bidirectional path. MSP isolated power (+5 V dc) is also applied from the 1A PWR to the no. 1 MSP through this path. Refer to figure 4-6 for ICC pin numbers and functions pertaining to these FCC/FCS connections.

The FMC-851A receives the following IAPS inputs: power, power valid, discrete warn, LA-IOC-4, LB-IOC-4, RA-IOC-4, and RB-IOC-4 data. The 1B PWR provides FMC operating power, power valid logic, and discrete warn logic inputs. The IOC-4 data buses provide redundant data input to the FMS system from all four IOC concentrators. The L-FMS-1 data output bus is applied to both the 1A and the 1B concentrators (for redundancy). FMC-851A communication with other units in the FMS system is indicated on the drawing by the wide, bidirectional path. DBU isolated power (+5/+12 V dc) is also applied from the 1B PWR to the DBU through this path. Refer to figure 4-7 for ICC pin numbers and functions pertaining to these FMC/FMS connections.

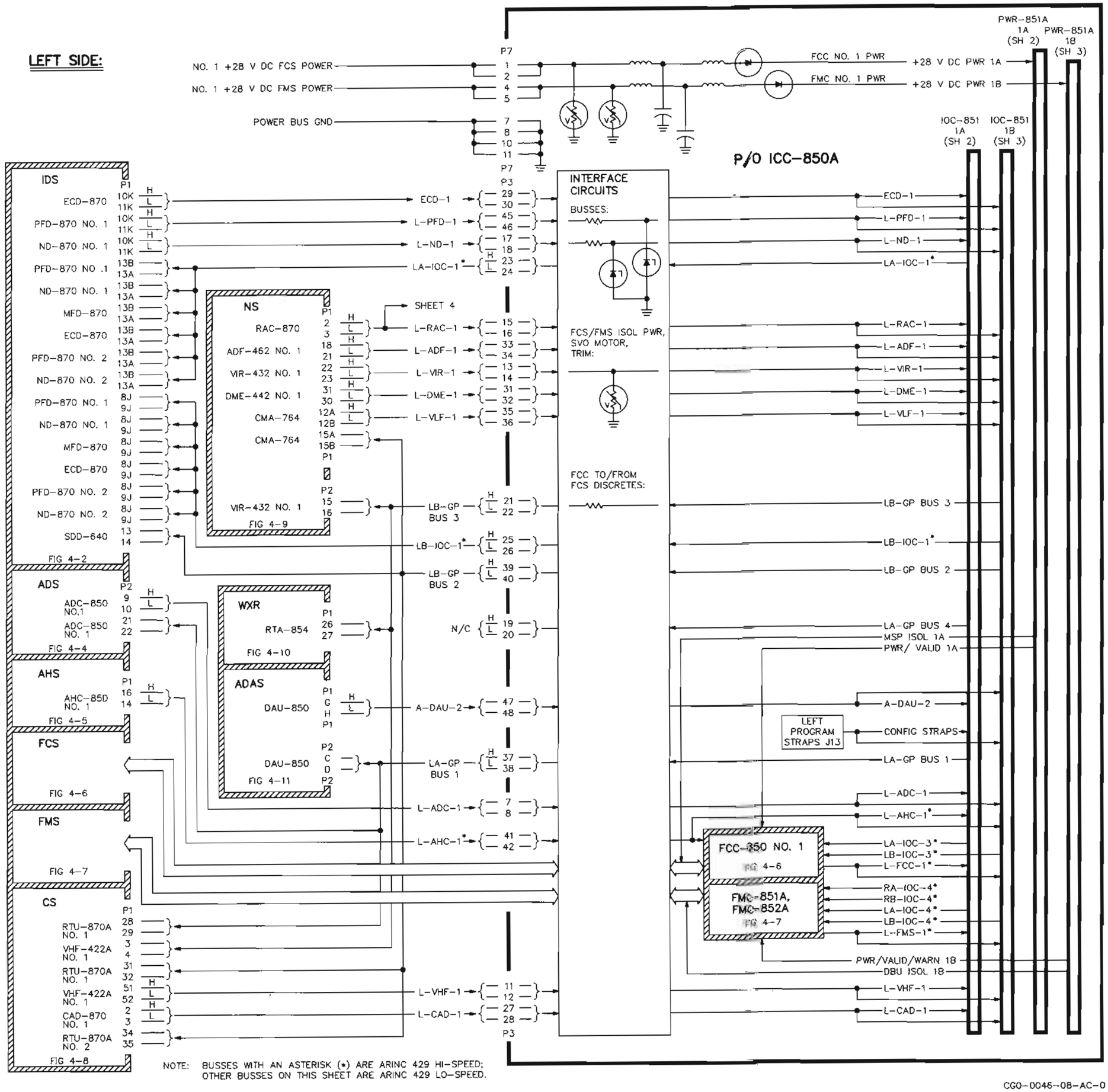

NOTE: BUSSES WITH AN ASTERISK (*) ARE ARINC 429 HI-SPEED; OTHER BUSSES ON THIS SHEET ARE ARINC 429 LO-SPEED.

CGO-0046-08-AC-0

IAPS System Schematic
Figure 4-3-1 (Sheet 1 of 6)

Refer to figure 4-3-1, sheet 2. This diagram shows the 1A IOC-851 input/output concentrator and the 1A PWR-851A power supply. These modules provide half of the left side IAPS function. Note that no pin numbers are shown on this sheet. This is because the IOC and the PWR modules are internal to the IAPS card cage and not meant to be removed and connected to a breakout box. All IAPS connections to external systems are made through the six ICC 50-pin connectors.

The 1A IOC processes the received ARINC 429 input data words, selects words required by resident and external units, and sends these words to the appropriate LRU's. The IOC controls the I/O interface and maintains the label mapping process to transmit only needed data to each receiving LRU.

A 16-bit microprocessor controls the IOC operation. The central function of this processor is to channel appropriate data from the total complement of input buses to a particular output bus, as that data becomes available. Address latches decode I/O device control, and a data transceiver provides 2-way communication between the processor and the IOC data bus. The microprocessor reset pin is tied to the power valid output from the PWR. The reset line is pulled low to cause the processor to execute its initialization routines if a transient causes the power supply to fluctuate beyond preset limits. No data is transmitted by the IOC during the time the reset line is low or during the reinitialization sequence.

Configuration strap information is buffered onto the IOC data bus. Temperature monitor discretes from the 1A and the 1B PWR's are also buffered onto the IOC data bus. The configuration straps provide option select data, and the temperature monitors provide overheat sense data input to the microprocessor.

An I/O bus interface provides bidirectional control of the data transfer between the IOC data bus and the I/O bus. An I/O request prioritizer controls the protocol for handling the input data. All received data is input to the microprocessor through this interface, and all output data generated by the microprocessor is transmitted through this interface.

Twelve ARINC 429 low-speed data buses are received by the 1A IOC. This data is applied to the receive port of an ARINC multiplexer or UART (accessed by the I/O bus) for input to the microprocessor. Three ARINC 429 high-speed data buses are received by the 1A IOC. This data is applied to the receive ports of three UART's (accessed by the I/O bus) for input to the microprocessor. Note that these 15 data bus inputs are also applied to the other left side IOC (1B).

The microprocessor generated output data is applied through the I/O bus interface to the five UART's. When the UART's are enabled to transmit, this output data is applied through two buffers to the resident FCS/FMS computers or to bus drivers. The buffered LA-IOC-4 and LA-IOC-3 ARINC 429 high-speed data buses are applied to the internal FMC-851A/CDC-850A and no. 1 FCC-850 computers respectively. Data from the other buffer is applied to two low-speed drivers and one high-speed driver. The LA-GP BUS 1 and the LA-GP BUS 4 ARINC 429 low-speed buses are applied through the ICC interface circuit to various external systems. The LA-IOC-1 ARINC 429 high-speed bus is applied through the ICC interface circuit to the IDS system.

The 1A PWR-851A provides current limited voltage outputs for use by the 1A IOC and the no. 1 FCC computer. A separate circuit applies independent, isolated voltage outputs to the no. 1 MSP mode select panel (external). Internal monitors ensure that no single point failure can damage external units.

The power input to the PWR is the emi filtered 1A +28-V dc level from the ICC. This power input is independent from the +28-V dc levels applied to the other three PWR modules. An internal series regulator develops the supply levels required by the PWR itself. The +28-V dc 1A input is applied to one end of the primary winding of a power transformer. This transformer contains three secondaries, which generate the PWR output voltages. Each secondary winding feeds a diode rectifier and capacitor circuit which charges to a precalculated voltage level. The voltage outputs from these circuits are applied through a regulator/filter network to provide the +5-, +28-, +12-, -12-, +12- (isolated), and +5- (isolated) V dc PWR outputs. Note that the +5-V dc isolated output (and an isolated ground) is applied to the no. 1 MSP, and that the +12-V dc isolated output from this PWR is not used. The other power outputs are applied to both the IOC and the FCC.

A pulse-width modulator provides variable duty cycle drive to the other end of the primary winding of the power transformer. The drive output is current monitored by the I-sense input of the modulator. The modulator also monitors the +5-V dc output voltage level and increases or decreases the output duty cycle to compensate for any fluctuation on the +5-V dc line.

A monitor network regularly checks the +5-, +28-, +12-, and -12-V dc outputs. This monitor provides overcurrent shutdown of the power supply if the current capability of the outputs is exceeded. This disc warn discrete is delayed approximately 1 ms prior to switching off the modulator. The monitor network also applies a reference level which is compared with the +5-V dc output. If an output should fail or if a transient is of sufficient length to cause an output to exceed tolerance limits, the reference voltage level will rise and cause the disc warn discrete to drop low. The power valid discrete output resets the microprocessor in the 1A IOC and in the left FCC. A 120-ms power-up delay allows the monitor to initialize properly.

The PWR also contains a temperature sensor. Should the cooling air system fail, this sensor will switch off a transistor to open a discrete output when the temperature rises to a preset limit. This condition warns that the power supply is approaching its maximum safe operating limits. This temp mon 1A output is applied to both left side IOC's. If operation continues and the temperature rises to the upper safe operating limit, the PWR will automatically shut itself down.

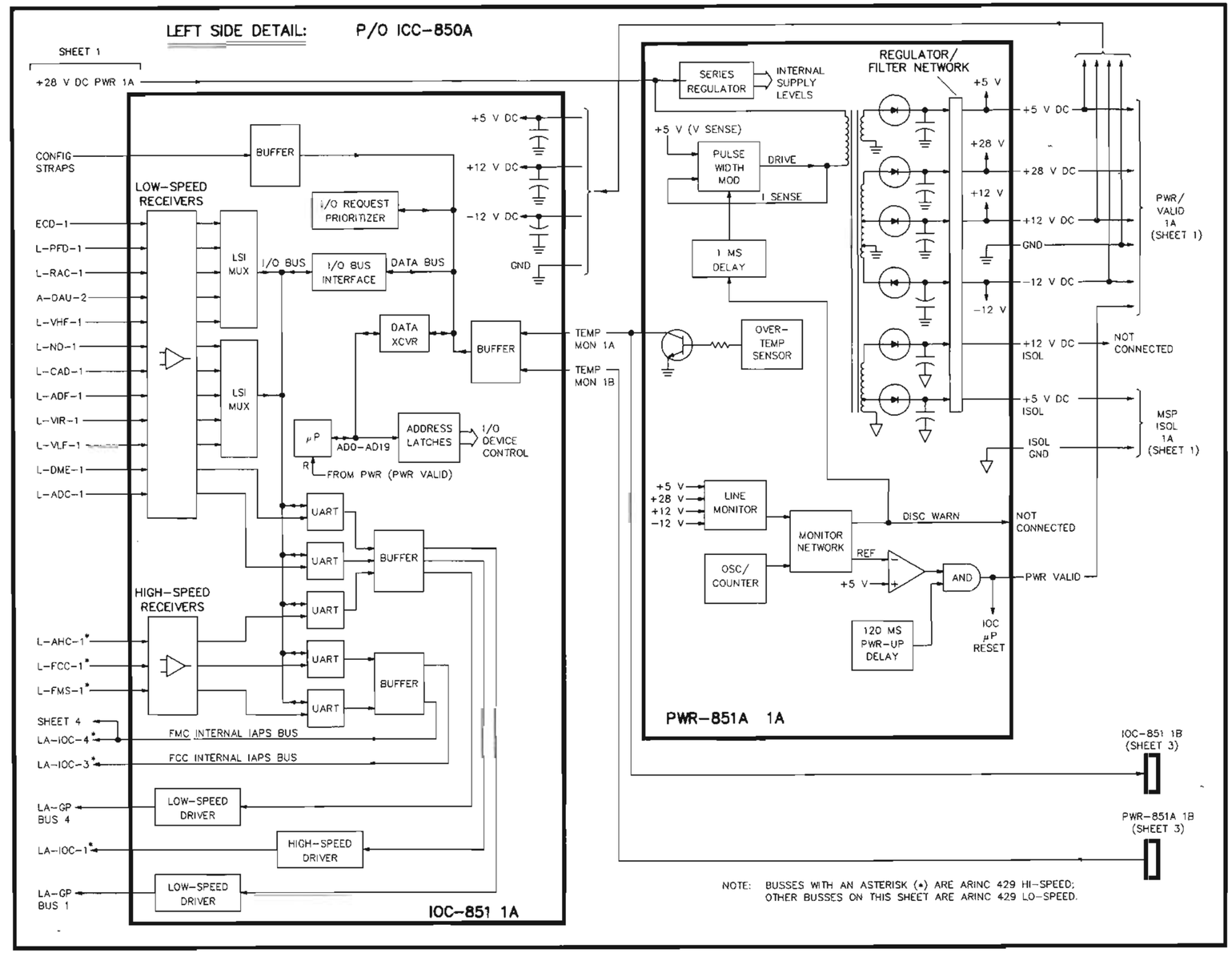

IAPS System Schematic
Figure 4-3-1 (Sheet 2 of 6)

Refer to figure 4-3-1, sheet 3. This diagram shows the 1B IOC-851 input/output concentrator and the 1B PWR-851A power supply. These modules provide the other half of the left side IAPS function.

Twelve ARINC 429 low-speed and three ARINC 429 high-speed data buses are received by the 1B IOC. Note that these same 15 data bus inputs are also applied to the other left side IOC (1A).

The buffered LB-IOC-4 and LB-IOC-3 ARINC 429 high-speed data bus outputs are applied to the internal FMC-851A/CDC-850A and no. 1 FCC-850 computers respectively. Data from the other buffers are applied to two low-speed drivers and one high-speed driver. The LB-GP BUS 2 and the LB-GP BUS 3 ARINC 429 low-speed buses are applied through the ICC interface circuit to various external systems. The LB-IOC-1 ARINC 429 high-speed bus is applied through the ICC interface circuit to the IDS system.

The 1B PWR provides current limited voltage outputs for use by the 1B IOC and the FMC computer. A separate circuit applies independent, isolated voltage outputs to the DBU data base unit.

Internal IOC and PWR operation is described on a previous page.

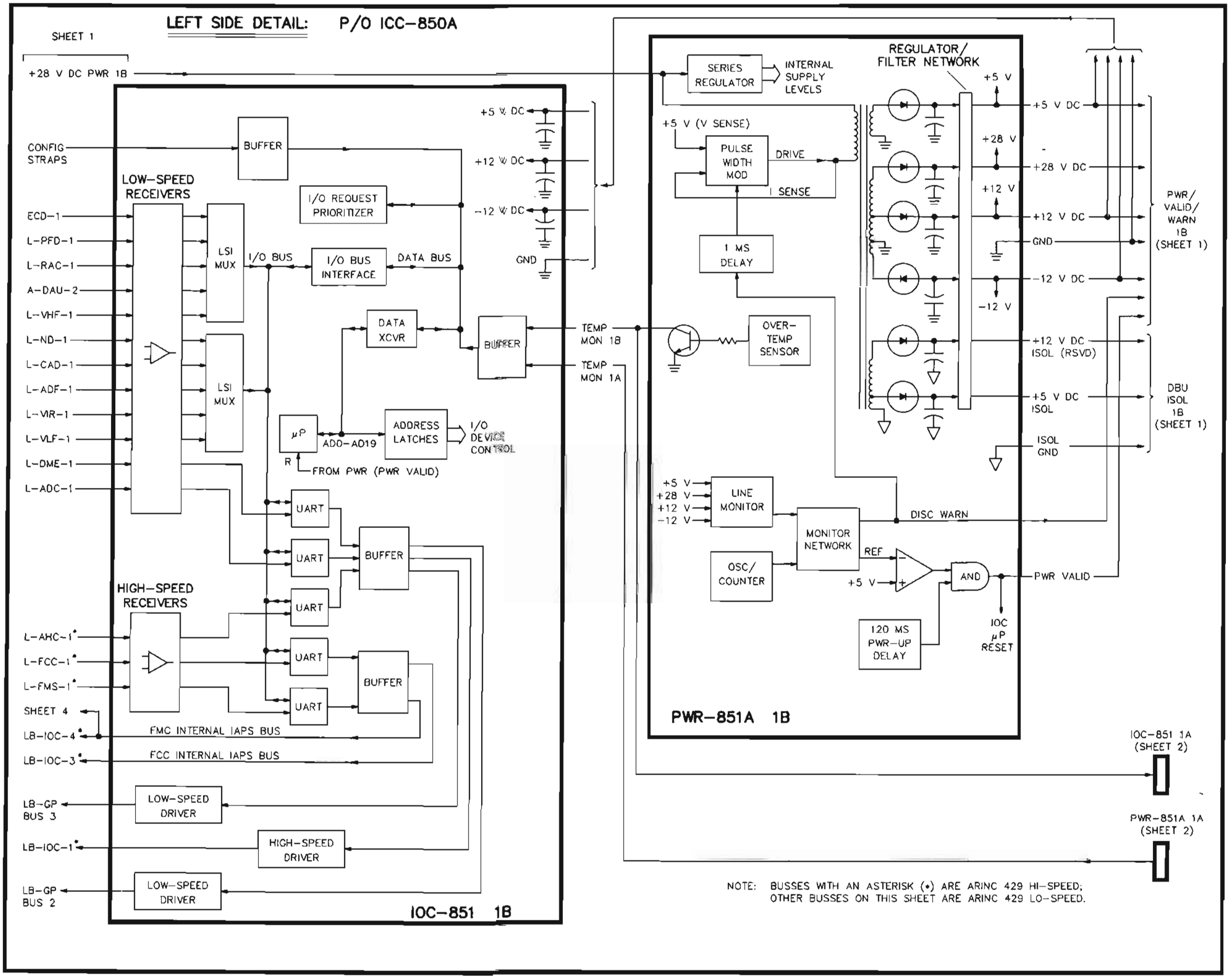

IAPS System Schematic
Figure 4-3-1 (Sheet 3 of 6)

Refer to figure 4-3-1, sheet 4. This sheet shows the right side ICC card cage circuits. The copilot IAPS data is interfaced with various external systems through the connectors shown on this sheet. External system data is routed through a protection interface circuit in the ICC and input to or output from the appropriate IOC or PWR. The right side modules are the 2A IOC, the 2B IOC, the 2A PWR, and the 2B PWR. Resident computers housed in this portion of the ICC are the FCC-850 no. 2 flight control computer (FCS system) and the CDC-850A right side CDU coupler (FMS system).

The right side IAPS circuits derive power from the no. 2 FCS and FMS +28-V dc aircraft supplies. +28-V dc power is input to two separate pairs of pins. Each of these power inputs is individually (lightning) protected by an MOV varistor, emi filtered by an LC network, and applied through an isolation diode to either the 2A or the 2B PWR module. These PWR modules generate the supply levels required by the internal cards.

All data going into or out of the ICC passes through an interface circuit. Data buses interface through a zener diode circuit for transient protection. The FCS/FMS isolated power, servo motor, and trim lines interface through a similar zener protection circuit. Discrete I/O passes through a series resistor. The cabin display bus interfaces through an isolation resistor. Note that all data flow through the interface circuits has been horizontally aligned on the drawing for ease of use.

All data bus inputs from external systems are received through the interface circuit and then applied to both the 2A and the 2B input/output data concentrators to provide redundancy. Since the FCC and the CDC computers are physically located inside the ICC, the data bus outputs from these units are applied directly to the data concentrators (not brought out of the ICC).

All data bus outputs from the IOC input/output concentrators are applied through the interface circuit to the LRU's specified on the drawing. An asterisk (*) on the drawing denotes ARINC 429 high-speed data buses; other data buses are ARINC 429 low-speed buses. Note that "GP" output buses are general purpose buses and are applied to more than one external system.

J14 contains the right side program straps. This connector provides hard grounds which set the aircraft configuration and options. These connector pin numbers are not specified here, since they are not to be altered by unauthorized personnel. The right program straps are applied to both the 2A/2B concentrators (for redundancy).

The no. 2 FCC receives the following IAPS inputs: power, power valid, R-AHC-1 data, RA-IOC-3 data, and RB-IOC-3 data. The 2A PWR provides FCC operating power and a power valid logic input. R-AHC-1 attitude heading data is input to the FCC as well as to both right side IOC's. The RA-IOC-3 and the RB-IOC-3 data buses provide redundant concentrated data input to the FCS system from the 2A and the 2B IOC's respectively. The R-FCC-1 data output bus is applied to both the 2A and the 2B concentrators (for redundancy). FCC communication with other units in the FCS system is indicated on the drawing by the wide, bidirectional path. MSP isolated power (+5 V dc) is also applied from the 2A PWR to the no. 2 MSP through this path. Refer to figure 4-6 for ICC pin numbers and functions pertaining to these FCC/FCS connections.

The CDC-850A receives the following IAPS inputs: power, power valid, discrete warn, RA-IOC-4, RB-IOC-4, LA-IOC-4, and LB-IOC-4 data. The 2B PWR provides CDC operating power, power valid logic, and discrete warn logic inputs. The IOC-4 data buses provide redundant data input to the FMS system from all four IOC concentrators. The R-FMS-1 data output bus is applied to both the 2A and the 2B concentrators (for redundancy). CDC-850A communication with other units in the FMS system is indicated on the drawing by the wide, bidirectional path. Refer to figure 4-7 for ICC pin numbers and functions pertaining to these CDC/FMS connections.

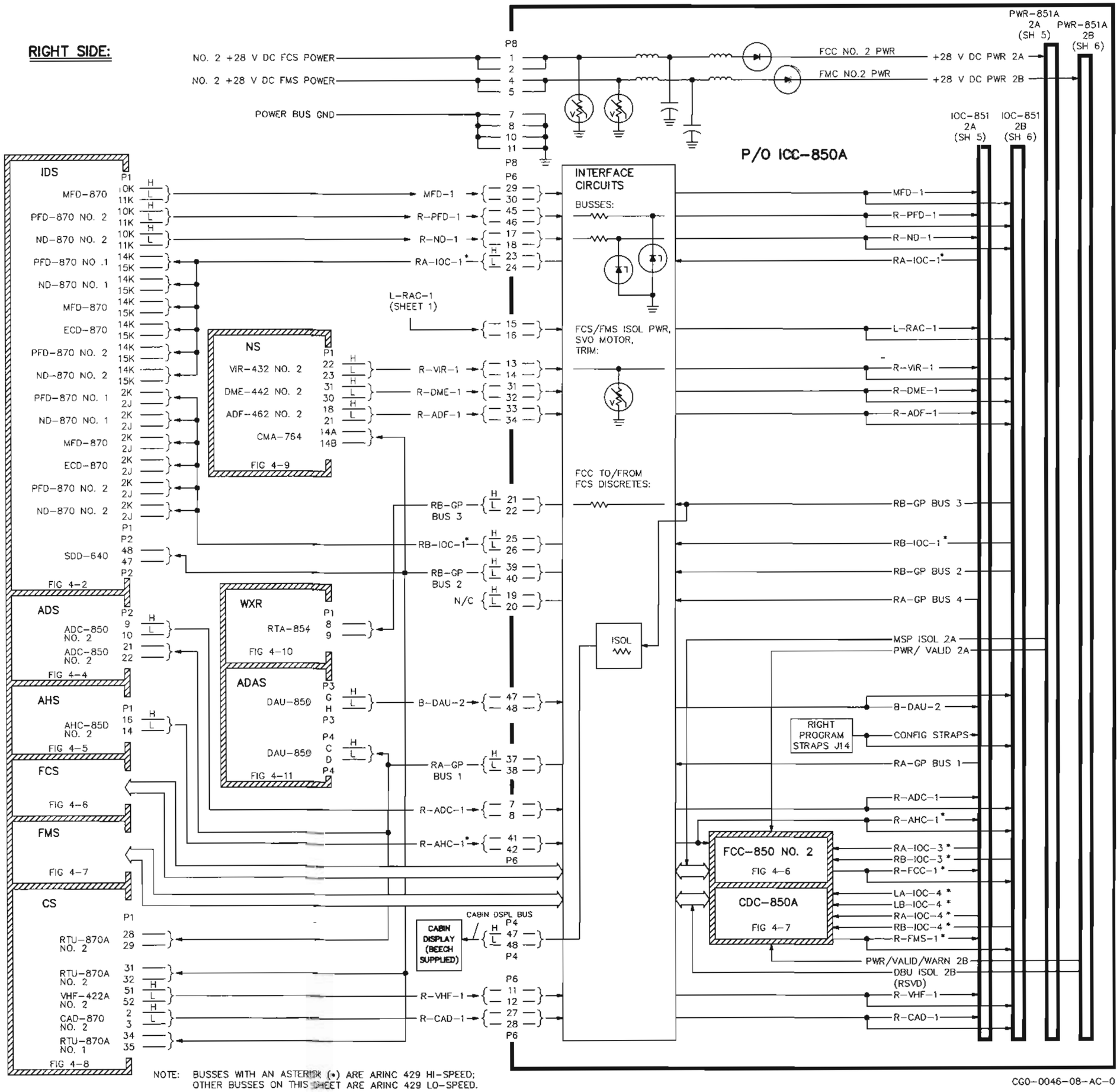

NOTE: BUSSES WITH AN ASTERISK (*) ARE ARINC 429 HI-SPEED; OTHER BUSSES ON THIS SHEET ARE ARINC 429 LO-SPEED.

IAPS System Schematic
Figure 4-3-1 (Sheet 4 of 6)

Refer to figure 4-3-1, sheet 5. This diagram shows the 2A IOC-851 input/output concentrator and the 2A PWR-851A power supply. These modules provide half of the right side IAPS function.

Eleven ARINC 429 low-speed and three ARINC 429 high-speed data buses are received by the 2A IOC. Note that these same 14 data bus inputs are also applied to the other right side IOC (2B).

The buffered RA-IOC-4 and RA-IOC-3 ARINC 429 high-speed data bus outputs are applied to the internal CDC-850A/FMC-851A and no. 2 FCC-850 computers respectively. Data from the other buffers are applied to two low-speed drivers and one high-speed driver. The RA-GP BUS 1 and the RA-GP BUS 4 ARINC 429 low-speed buses are applied through the ICC interface circuit to various external systems. The RA-IOC-1 ARINC 429 high-speed bus is applied through the ICC interface circuit to the IDS system.

The 2A PWR provides current limited voltage outputs for use by the 2A IOC and the no. 2 FCC computer. A separate circuit applies independent, isolated voltage outputs to the no. 2 MSP mode select panel.

Internal IOC and PWR operation is described on a previous page.

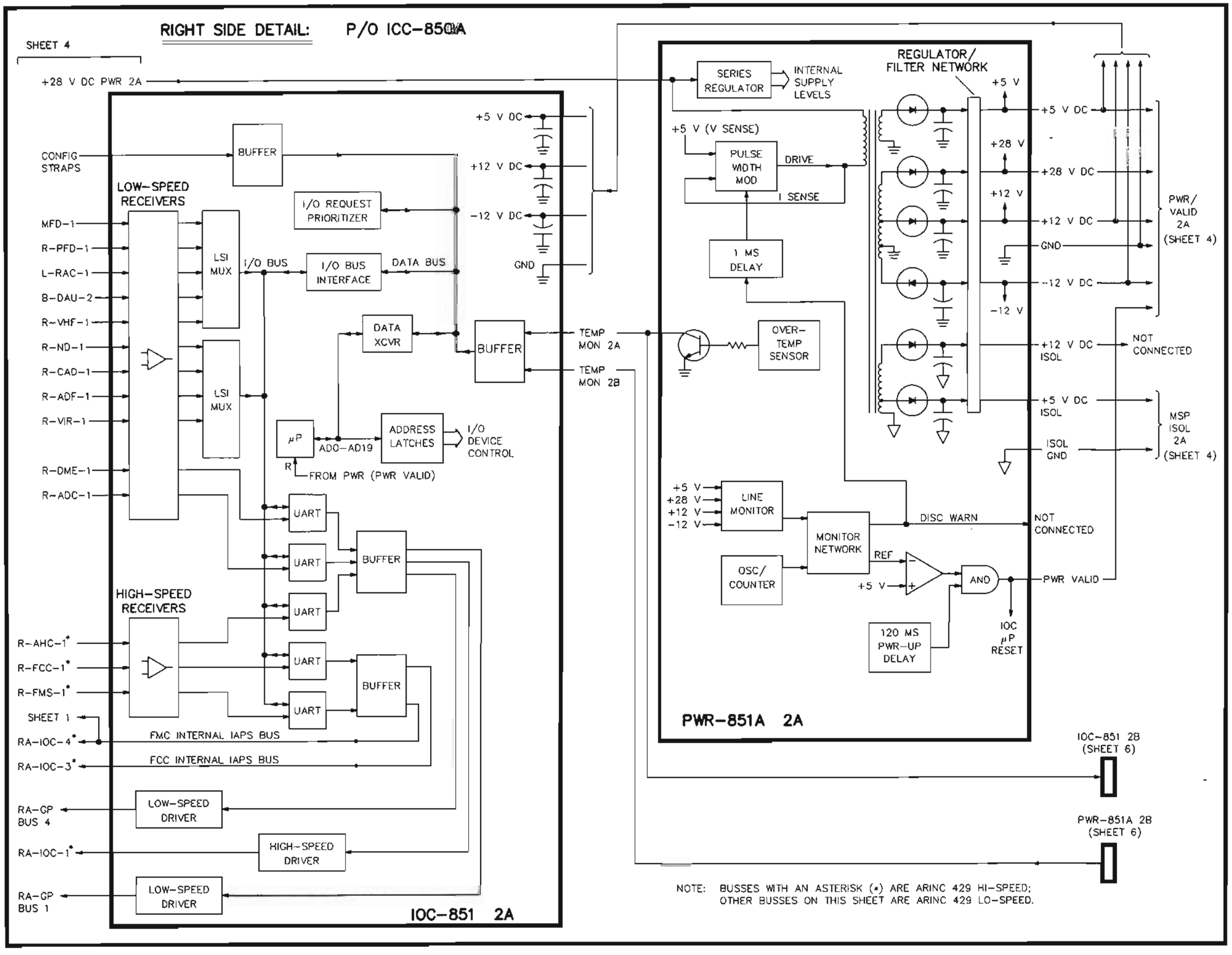

CG0-0046-08-AC-0

IAPS System Schematic
Figure 4-3-1 (Sheet 5 of 6)

Refer to figure 4-3-1, sheet 6. This diagram shows the 2B IOC-851 input/output concentrator and the 2B PWR-851A power supply. These modules provide the other half of the right side IAPS function.

Eleven ARINC 429 low-speed and three ARINC 429 high-speed data buses are received by the 2B IOC. Note that these same 14 data bus inputs are also applied to the other right side IOC (2A).

The buffered RB-IOC-4 and RB-IOC-3 ARINC 429 high-speed data buses are applied to the internal CDC-850A/FMC-851A and no. 2 FCC-850 computers respectively. Data from the other buffers are applied to two low-speed drivers and one high-speed driver. The RB-GP BUS 2 and the RB-GP BUS 3 ARINC 429 low-speed buses are applied through the ICC interface circuit to various external systems. The RB-IOC-1 ARINC 429 high-speed bus is applied through the ICC interface circuit to the IDS system.

The 2B PWR provides current limited voltage outputs for use by the 2B IOC and the CDC-850A computer. A separate circuit applies independent, isolated voltage outputs.

Internal IOC and PWR operation is described on a previous page.

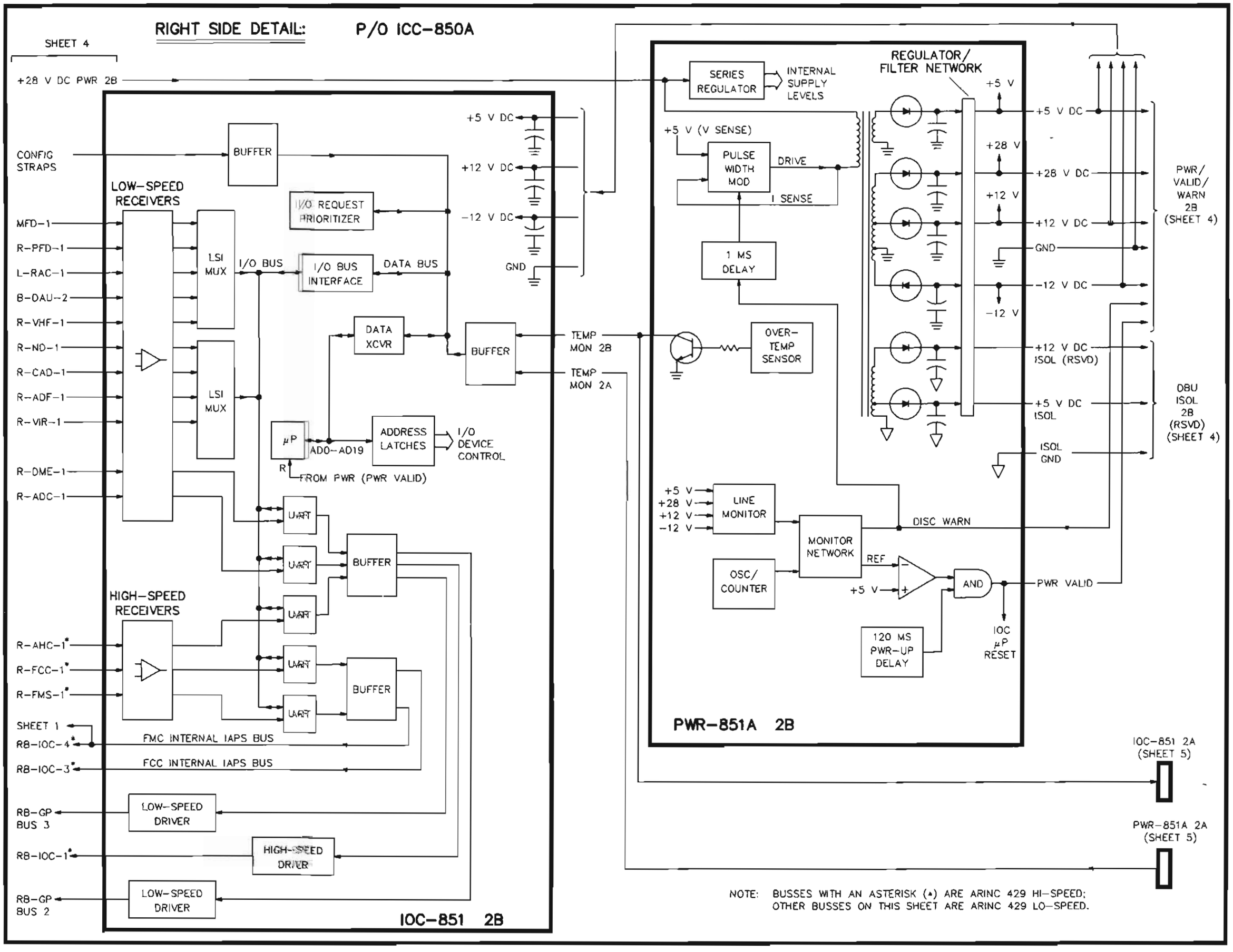

CGO-0046-08-AC-0

IAPS System Schematic
Figure 4-3-1 (Sheet 6 of 6)

This page intentionally left blank.

4.3.3 ADS (Air Data System)

4.3.3.1 Overview

The ADS contains two remote mounted air data computers, two air data modules, and two pairs of 4-inch crt displays. The ADS is a dual system; the no. 1 (pilot side) system is identical to the no. 2 (copilot) system. Refer to figure 4-4. Each LRU is described below:

ADC-850 No. 1 Air Data Computer
ADM-850 No. 1 Air Data Module
ASI-850A No. 1 Airspeed Indicator
ALI-850A No. 1 Altitude Indicator
ADC-850 No. 2 Air Data Computer
ADM-850 No. 2 Air Data Module
ASI-850A No. 2 Airspeed Indicator
ALI-850A No. 2 Altitude Indicator

The no. 1 ADC-850 is an instrument grade air data source for the various pilot side avionic subsystems. Pitot and static pneumatic inputs and a temperature probe input provide raw air data information to the the computer. Indicator knob position (from the ASI/ALI), configuration data (from the ADM), reference inputs (from the IAPS), and cross-side air data (from the no. 2 ADC) are also received by the ADC. Processed air data is applied from the ADC to both indicators, to an input/output concentrator (IAPS), to the attitude heading computer (AHS), and to the cross-side air data computer. IAS discrete outputs are also provided to the trim system (FCS).

The no. 1 ADM-850 is a configuration module that plugs into the top of the no. 1 air data computer. This module contains data unique to the ADS system as certified in the Starship 1 aircraft.

The no. 1 ASI-850A is a 4-inch color crt that provides the airspeed indicator display function. The ASI-850A receives processed air data information from the left ADC computer. Airspeed and temperature parameters are decoded and displayed. ASI pilot input is selected by front panel knobs and applied through the ALI to the left air data computer.

The no. 1 ALI-850A is a 4-inch color crt that provides the altitude and vertical speed indicator display functions. The ALI-850A receives processed air data information from the left ADC computer. Altitude, vertical speed, and barometric pressure parameters are decoded and displayed. ALI pilot input is selected by front panel knobs and applied with ASI knob data to the left air data computer.

The copilot (no. 2) ADS system operates identically to the no. 1 system described above. The only difference at this level of description is that no IAS discrete trim data output is applied from the no. 2 ADC-850 to the FCS.

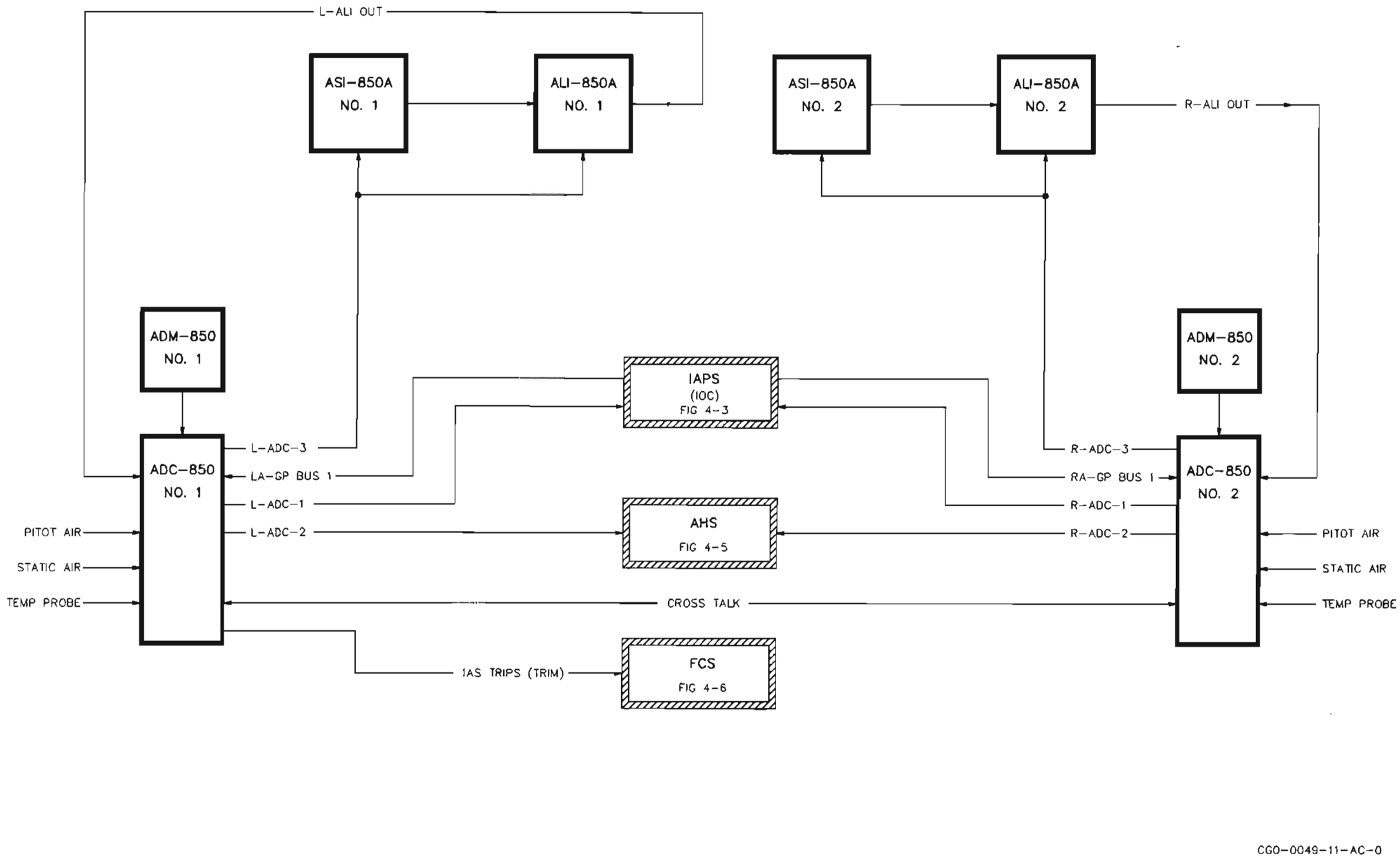

ADS (Air Data System) Overview
Figure 4-4

4.3.3.2 System Schematic

Refer to figure 4-4-1, sheet 1. This sheet shows the ADM-850 air data module, as well as the front assembly pneumatic sensors and the ARINC 429 I/O interfaces of the left side ADC-850. The next sheet shows the two microprocessors (absolute and differential) controlling these functions.

The following ADC absolute circuits are shown on this sheet: the ADM interface, the ARINC 429 low-speed interfaces, and the absolute air data sensor circuit. The following ADC differential circuits are shown on this sheet: the ADM interface and the differential air data sensor circuit. Note that other absolute and differential circuits are shown on sheet 2.

The ADM module contains an absolute PROM and a differential PROM. These PROM's contain aircraft type/binary codes, temperature probe coefficients, maximum VMO/MMO, and various other aircraft peculiar configuration data. The absolute PROM is addressed by the absolute microprocessor through a decoder circuit. Absolute PROM data is read directly onto the absolute data bus. The differential PROM is addressed by the differential microprocessor through a similar decoder circuit. Differential PROM data is read directly onto the differential data bus.

The ADC handles all ARINC 429 interfaces using a single ARINC UART. This UART is accessed by the absolute microprocessor through a transceiver circuit. The LA GP BUS 1 data bus input from the IAPS supplies FCS selected air data reference values. This ARINC input and a sampling of the UART output are multiplexed to the receive port of the UART. This data is then read by the microprocessor through the absolute data bus. When the UART is enabled to transmit, microprocessor generated data is applied to the UART and then serially transmitted to three ARINC drivers. The L-ADC-1 output bus is applied to an input/output concentrator in the IAPS system and to the Beech pressurization control system. The L-ADC-2 output bus is applied to the onside computer in the AHS system. The L-ADC-3 output bus is applied to the onside ALI and the ASI indicators.

The front assembly of the ADC contains the absolute and the differential air data sensors and supporting circuitry. Two absolute sensors form an altitude sensor. Each of these absolute sensors receives air from the onside static port.

A single differential sensor contains two independent sensors which together form an airspeed sensor. One-half of the differential sensor receives air from the onside static port, and the other half receives air from the onside pitot port. The supporting circuitry for both the absolute and the differential sensors is identical.

The two absolute sensors operate together to detect and load an altitude air data input onto the absolute data bus. Each sensor receives bias (bridge voltage/chop) from a control circuit. The sensor contains loops which return pressure (P) and temperature (T) signals to the controller. These signals are received and processed to apply variable duty cycle pulse-width outputs to a multiplexer at an 80-Hz rate.

An 80-Hz multiplexer provides calibration logic to both absolute sensors. A latch decodes calibration control data from the absolute data bus. This data is applied to the 80-Hz multiplexer, which functions as a calibration timer for both sensors. This circuit ensures that either sensor 1 or sensor 2 (never both) is in calibration mode. Every 15 seconds, one sensor is put into calibration mode. During this calibration period, the other sensor applies valid pressure and temperature outputs. Then, the previously active sensor is put into calibration mode and the other one (previously being calibrated) becomes active. This ensures that the active sensor is always properly calibrated.

The multiplexer circuit receives the pressure and the temperature pulse-width signals from both absolute sensors. Latch logic enables the multiplexer to apply this data to a counter network. This counter network formats the data for use by the microprocessor and ensures the integrity of the sensor data. The multiplexed data is sequenced through this network in a way that recognizes the active (not calibration) signals; the counter output is then applied onto the absolute data bus.

The differential sensor circuit is nearly identical to that described above. The two halves of the differential sensor operate like individual absolute sensors. Inputs from the static and the pitot ports are used to provide the airspeed sensor function. This circuit is controlled by, and provides data to, the differential microprocessor using the differential data bus.

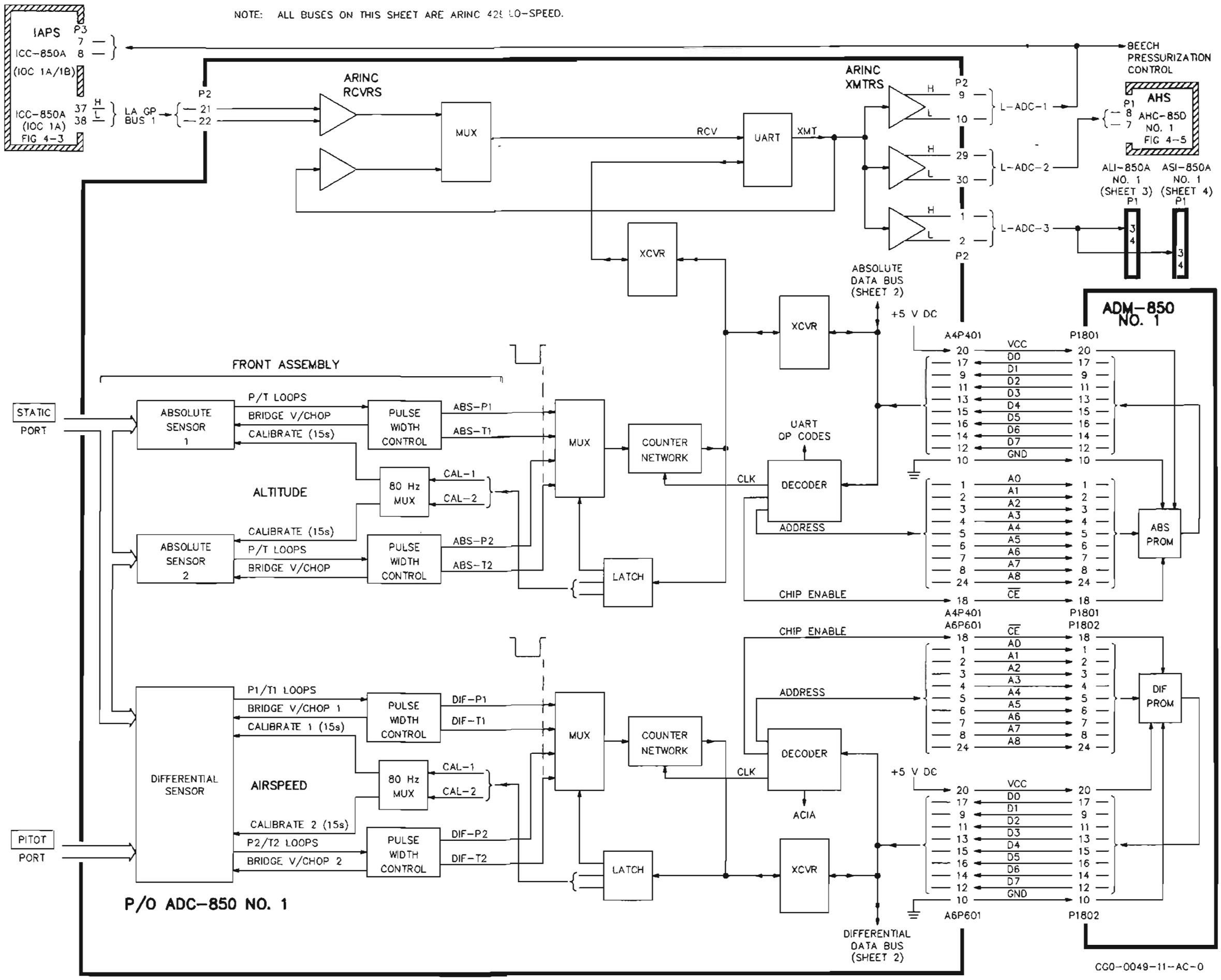

ADS System Schematic
Figure 4-4-1 (Sheet 1 of 8)

Refer to figure 4-4-1, sheet 2.

The left ADC-850 is powered by the no. 1 +28-V dc aircraft supply. A separate pin provides +28-V dc standby power. The input power is filtered, varistor protected, and applied to a pulse-width modulator power supply. The pulse-width modulator generates internally required voltage levels and the power levels required by the sensors.

The absolute microprocessor (A3) is an interrupt driven system. Foreground task execution is regularly initiated by a 50-ms NVI interrupt. These normal routines execute until a vectored interrupt requests a microprocessor action. These vectored interrupts occur whenever a designated task requires microprocessor attention (ie, ARINC transmit buffer becomes empty).

The absolute microprocessor operates a 16-bit bidirectional data bus. An address latch functions with a decoder circuit to generate the required address and chip enables from this microprocessor bus. A data transceiver provides 2-way data flow between the microprocessor bus and the absolute data bus. The absolute data bus gathers the following information for use by the processor: sensor PROM data, nonvolatile RAM data, altitude offset data, test mode data, discrete strap data, identification data, and FIFO data. Note that this bus also gathers ARINC I/O data, ADM data, and altitude sensor data as described previously for sheet 1 of the system schematic. The absolute data bus provides microprocessor generated FIFO control, FIFO data, and annunciator data information.

An addressable sensor data PROM provides sensor related parameters required by the processor. Nonvolatile RAM memory retains key data parameters between flights (power-down). A dipswitch (S501) sets an altitude offset to compensate for variations in sensor hardware. The TEST button applies a discrete ground when requesting self-test mode. Rear connector straps provide source ident (open for left ADC) and configuration select discrete data. These discretes are buffered onto the data bus. A dipswitch (S201) sets an LRU identification code required by the processor. The FIFO circuit brings temperature probe, RS-422 related data, and airspeed sensor data to the A3 microprocessor.

The absolute processor applies FIFO control through a decoder to read differential data and also to write the above described absolute data into the FIFO for use by the A7 processor. Both processors share data with each other. The absolute microprocessor also applies annunciator control through a decoder circuit. The decoder applies a voltage to turn on a transistor switch, which lights the applicable FAULT or VALID annunciator. These annunciators are actuated in response to a press of the TEST button or when a fault is detected by internal monitoring.

The differential microprocessor (A7) is also an interrupt driven system. A 50-ms NVI interrupt and various vectored interrupts function as previously described for the A3 processor.

The differential microprocessor operates a 16-bit bidirectional data bus. An address latch functions with a decoder circuit to generate the required address and chip enables from this microprocessor bus. A data transceiver provides 2-way data flow between the microprocessor bus and the differential data bus. The differential data bus gathers the following information for use by the processor: sensor PROM data, nonvolatile RAM data, ALI input data, cross-side ADC input data, temperature probe data, and FIFO data. Note that this bus also gathers ADM and airspeed sensor data as described previously for sheet 1 of the system schematic. The differential data bus provides microprocessor generated FIFO control, FIFO data, cross-side ADC transmit data, and IAS relay control data information.

An addressable sensor data PROM provides sensor related parameters required by the processor. Nonvolatile RAM memory retains key data parameters (baro set and pressure altitude) between flights. The RS-422 L-ALI-OUT data bus provides ASI knob selection; ALI knob selection; and external BARO, FL180, and VMO/MMO switch selection data input. This L-ALI-OUT data is received and applied through an ACIA onto the differential data bus. The R-ADC XTLK OUT RS-422 data bus provides cross-side ADC input data. This data bus is received and applied through a different ACIA onto the differential data bus. Note that this ACIA may also be enabled to read microprocessor generated output data and apply a serial transmit output to an RS-422 driver. This driver applies the L-ADC XTLK OUT data bus to the cross-side ADC.

An external temperature probe provides a variable 500-Ω impedance level input to the ADC. The specific probe impedance varies with temperature. This impedance level is sensed, converted to a frequency, and loaded onto the differential data bus by a 16-bit counter.

The FIFO circuit brings discrete data, ARINC 429 related data, and altitude sensor data to the A7 microprocessor. This processor generates FIFO control through a decoder to read data and also to write data into the FIFO for use by the A3 processor.

The differential microprocessor also applies IAS relay control logic through a decoder/driver circuit. The decoder/driver applies individual grounds to turn on one or both relays. One side of each relay switch contact is wired to the REF V input line from the FCS system. This line provides a voltage reference. When air data is valid and the IAS is less than 150 knots, one relay actuates and passes the reference voltage out P3-12 to the FCS system. When air data is valid and the IAS is less than 200 knots, another relay actuates and passes the reference voltage out P3-16 to the FCS system.

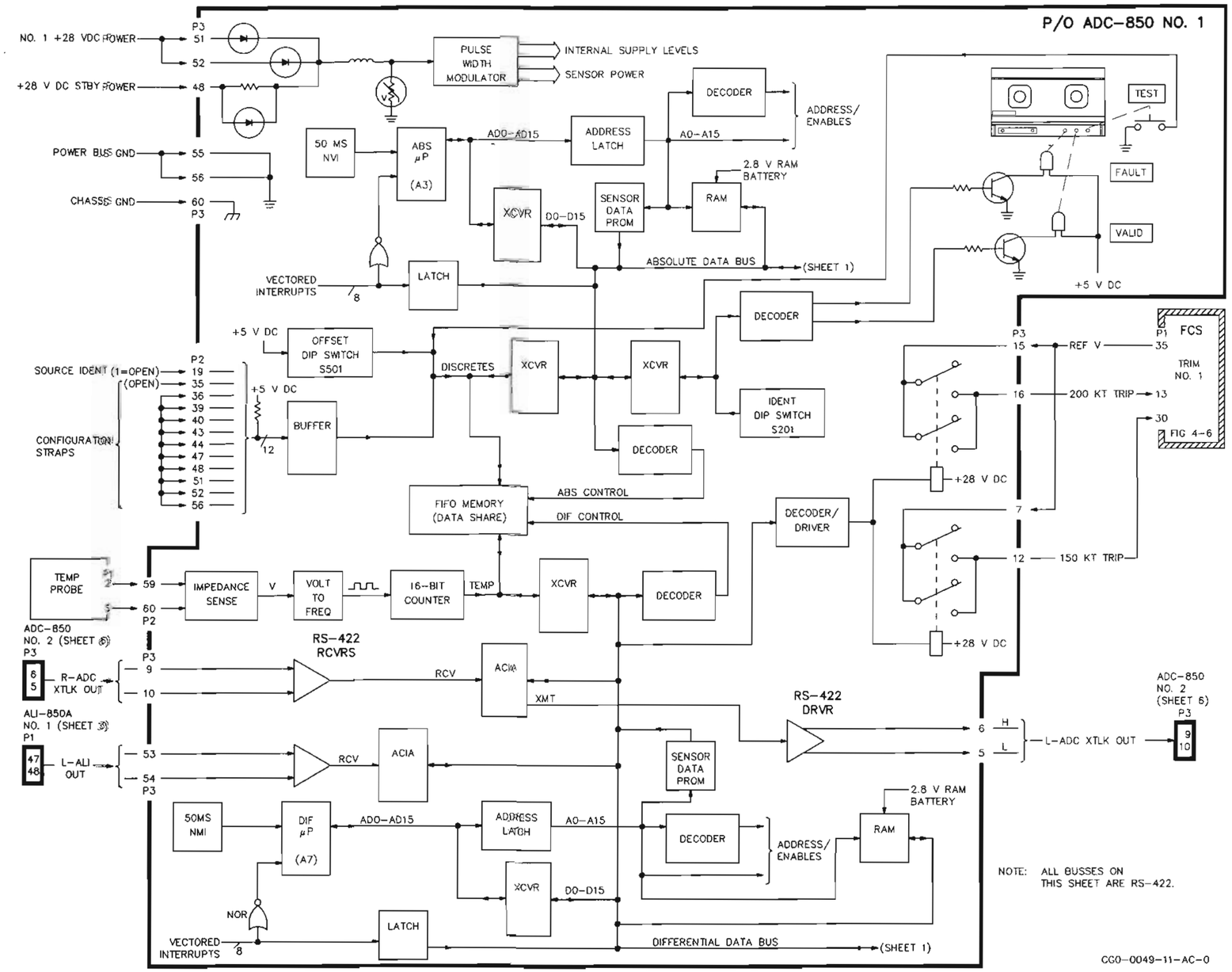

ADS System Schematic
Figure 4-4-1 (Sheet 2 of 8)

The no. 1 ALI-850A displays left side altitude and vertical speed data. Refer to figure 4-4-1, sheet 3.

The left ALI is powered by the no. 1 +28-V dc aircraft supply. A zener diode regulates the power input, which is applied to the low-voltage power supply. The low-voltage power supply generates internally required voltage levels, powers the video power supply, and provides drive to the high-voltage regulator. The video power supply generates additional voltage levels required by the video circuits, as well as the screen (400-V dc) and filament (heat) outputs to the crt.

The high-voltage regulator provides drive to the high-voltage power supply. A feedback (V sense) line provides a monitor return used to regulate the amount of drive. The high-voltage supply outputs are the anode (15-kV dc) and focus (2.7- to 4.3-kV dc) levels supplied to the crt. A power monitor circuit provides a shutdown control, which disables the high-voltage supply (through the regulator) and blanks the display if power limits or phosphor protect limits are exceeded.

A display microprocessor reads the L-ADC-3 input bus and controls crt operation. This processor generates video gate logic, provides port address to the program memory, and controls both the ARINC input and the display functions using an 8-bit bidirectional data bus. Video gate logic (VG 1/2) is generated and applied as control input to the cathode drive enable circuits. The port address output allows the processor to access the program PROM.

The AD0-AD7 bidirectional data bus provides microprocessor generated information to a control decoder and to the character generator (through a transceiver). The data bus also gathers program memory data and L-ADC-3 input data for use by the microprocessor.

The control decoder circuit reads the AD0-AD7 data bus and applies control and enable logic to various devices in the ALI. The character generator provides the display function and is described in a subsequent paragraph. Program memory contains executable routines for the ALI; this function is represented by the program PROM block. The L-ADC-3 input data bus is applied from the left ADC computer. This bus brings up-to-date altitude and vertical speed information to the ALI. The L-ADC-3 data bus is input through an ARINC 429 low-speed receiver, converted to parallel format, and buffered through a FIFO (first in first out) memory onto the AD0-AD7 microprocessor data bus.

The character generator is a stroke draw circuit which provides the video drive to illuminate images on the screen. A transceiver provides data transfer between the microprocessor (AD0-AD7) and the stroke draw circuits (B0-B7). Character color, select, and offset angle display information is decoded from the microprocessor bus.

The character color information is applied to a video generator. The video generator converts this information into delayed red, green, and blue video color outputs. These color outputs are applied to the three cathode drivers in the video amplifier. A video delay is added to sync the cathode drive with the deflection signals.

The character select information is applied to a character address sequencer. This circuit is clocked by the draw time counter to count out the address of the selected character. Character PROM's "look up" the character associated with this address and apply the appropriate video, timing, and draw angle outputs. The character video output logic is applied to the video gate circuit. Timing associated with the selected character is applied as a control input to the draw time counter. This counter applies an integrator output used to clock the character address sequencer and to activate an integrator select circuit. The character draw angle output is applied to an adder circuit.

The adder circuit sums the character offset angle information with the character draw angle to produce the display angle (theta). Sin/cos PROM's convert the display angle input into sine θ and cosine θ outputs. A control output is also applied to the integrator select circuit. The sine θ data from the PROM is digital-to-analog converted and applied to the horizontal integrator. This integrator is controlled by a left/right enable from the integrator select circuit and applies a horizontal position voltage to the deflection circuits. The cosine θ PROM output is similarly d/a converted and integrated to apply a vertical position voltage to the deflection circuits. The vertical integrator is controlled by an up/down enable from the integrator select circuit.

The horizontal and vertical position voltages are then adjusted for proper offset, gain, and linearity. The resultant horizontal and vertical screen position voltages are then converted to current outputs by the deflection power amplifiers. These current outputs

are applied to the yoke of the crt assembly and deflect the electron beam to the proper X and Y coordinates on the screen.

Character video logic (VID from the character generator), VG 1/2 video gate logic (from the microprocessor), and vertical deflection return (from the yoke) are applied to the video gates. The video gates produce logic to properly enable the video amplifiers. An appropriate delay is included, so the cathode drive and the deflection outputs are simultaneously applied to the crt assembly.

The video amplifier applies amplified red, green, and blue drive to the crt cathodes. The video amplifier is enabled by logic from the video gates, as described above. The video amplifier bias is controlled by an intensity circuit, as described below.

The front panel BRT knob input and the +28-V dc lighting bus input are applied to an intensity control circuit. This circuit provides analog screen intensity bias output to the video amplifier.

A power monitor circuit generates shutdown/fail protection outputs if crt levels or power levels exceed preset limits. The vertical deflection return voltage (from the yoke) and a sampling of the red, green, and blue video drive signals are applied to a phosphor protect circuit. If any of these signals become excessive, damage to the crt could result. The phosphor protect circuit then applies a discrete which trips the power monitor. The +24-V dc power reference level is also monitored and will trip the power monitor should this level become unacceptable. When either of these two conditions occurs, the power monitor shuts down the high-voltage regulator (to prevent damage to the crt) and toggles a transistor to report a fail condition. This "fail" discrete from the ALI is not connected at this time.

The ALI contains a second microprocessor used to control the non-ARINC I/O functions. This I/O microprocessor reads the ALI front panel knob positions, the ASI front panel knob positions, and external switch positions. This data is applied through an RS-422 driver as the L-ALI OUT bus to the onside ADC. The ALI and the ASI knobs are directly scanned by the processor. The three external switch inputs provide the following information. The BARO switch is a reversionary control that causes the barometric pressure to be displayed in inches of mercury (INCHES) or in millibars (MB). The FL180 switch is a reversionary control that enables (ALERT) or disables (DISABLE) the flight level 180 alert indications. The VMO/MMO switch initiates the overspeed warning test.

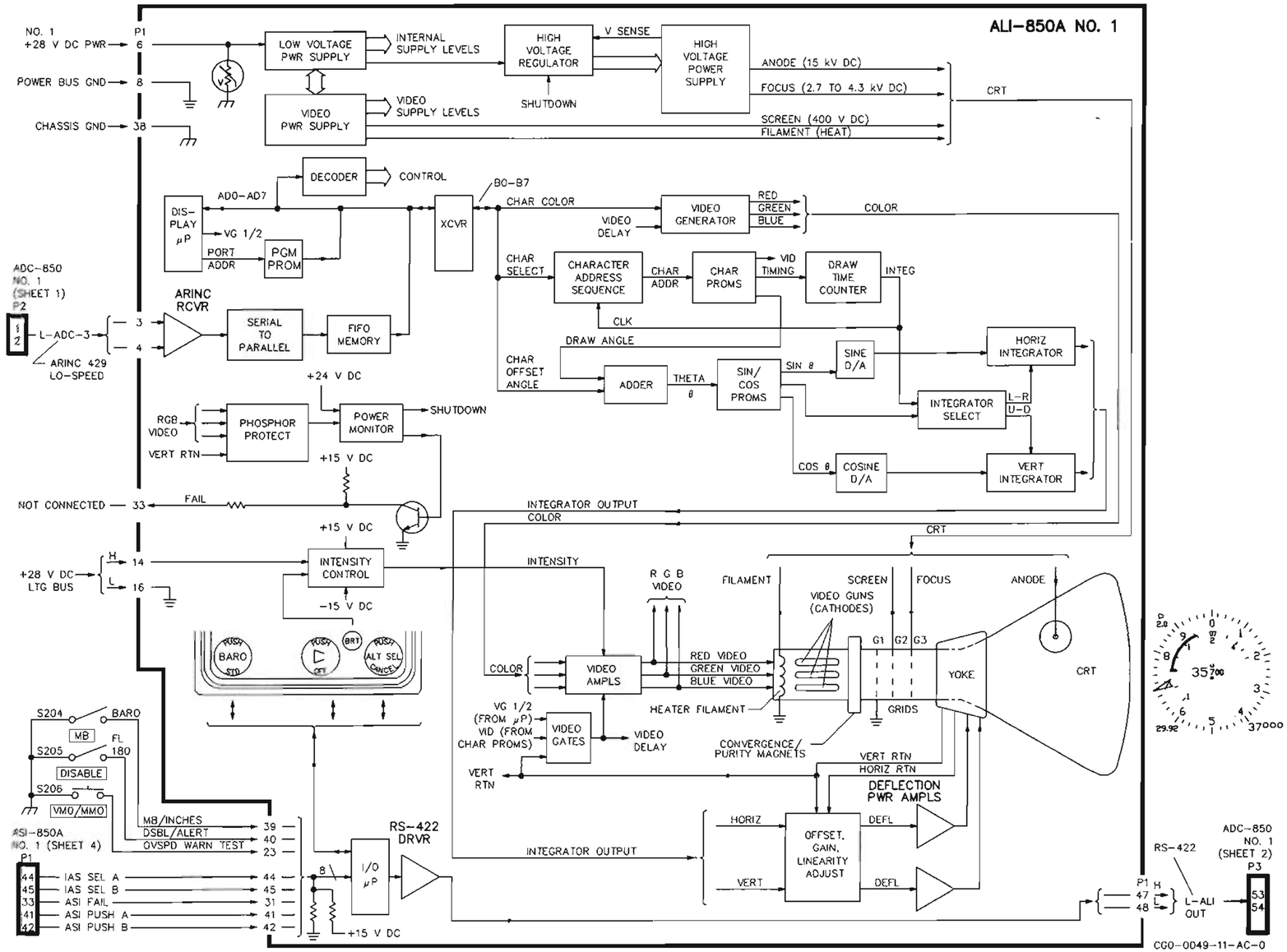

ADS System Schematic
Figure 4-4-1 (Sheet 3 of 8)

The no. 1 ASI-850A displays left side airspeed and temperature data. Refer to figure 4-4-1, sheet 4.

The left ASI is powered by the no. 1 +28-V dc aircraft supply. A zener diode regulates the power input, which is applied to the low-voltage power supply. The low-voltage power supply generates internally required voltage levels, powers the video power supply, and provides drive to the high-voltage regulator. The video power supply generates additional voltage levels required by the video circuits, as well as the screen (400-V dc) and filament (heat) outputs to the crt.

The high-voltage regulator provides drive to the high-voltage power supply. A feedback (V sense) line provides a monitor return used to regulate the amount of drive. The high-voltage supply outputs are the anode (15-kV dc) and focus (2.7- to 4.3-kV dc) levels supplied to the crt. A power monitor circuit provides a shutdown control, which disables the high-voltage supply (through the regulator) and blanks the display if power limits or phosphor protect limits are exceeded.

A display microprocessor reads the L-ADC-3 input bus and controls crt operation. This processor generates video gate logic, provides port address to the program memory, and controls both the ARINC input and the display functions using an 8-bit bidirectional data bus. Video gate logic (VG 1/2) is generated and applied as control input to the cathode drive enable circuits. The port address output allows the processor to access the program PROM.

The AD0-AD7 bidirectional data bus provides microprocessor generated information to a control decoder and to the character generator (through a transceiver). The data bus also gathers program memory data and L-ADC-3 input data for use by the microprocessor.

The control decoder circuit reads the AD0-AD7 data bus and applies control and enable logic to various devices in the ASI. The character generator provides the display function and is described in a subsequent paragraph. Program memory contains executable routines for the ASI; this function is represented by the program PROM block. The L-ADC-3 input data bus is applied from the left ADC computer. This bus brings up-to-date airspeed and temperature information to the ASI. The L-ADC-3 data bus is input through an ARINC 429 low-speed receiver, converted to parallel format, and buffered through a FIFO (first in first out) memory onto the AD0-AD7 microprocessor data bus.

The character generator is a stroke draw circuit which provides the video drive to illuminate images on the screen. A transceiver provides data transfer between the microprocessor (AD0-AD7) and the stroke draw circuits (B0-B7). Character color, select, and offset angle display information is decoded from the microprocessor bus.

The character color information is applied to a video generator. The video generator converts this information into delayed red, green, and blue video color outputs. These color outputs are applied to the three cathode drivers in the video amplifier. A video delay is added to sync the cathode drive with the deflection signals.

The character select information is applied to a character address sequencer. This circuit is clocked by the draw time counter to count out the address of the selected character. Character PROM's "look up" the character associated with this address and apply the appropriate video, timing, and draw angle outputs. The character video output logic is applied to the video gate circuit. Timing associated with the selected character is applied as a control input to the draw time counter. This counter applies an integrator output used to clock the character address sequencer and to activate an integrator select circuit. The character draw angle output is applied to an adder circuit.

The adder circuit sums the character offset angle information with the character draw angle to produce the display angle (theta). Sin/cos PROM's convert the display angle input into sine θ and cosine θ outputs. A control output is also applied to the integrator select circuit. The sine θ data from the PROM is digital-to-analog converted and applied to the horizontal integrator. This integrator is controlled by a left/right enable from the integrator select circuit and applies a horizontal position voltage to the deflection circuits. The cosine θ PROM output is similarly d/a converted and integrated to apply a vertical position voltage to the deflection circuits. The vertical integrator is controlled by an up/down enable from the integrator select circuit.

The horizontal and vertical position voltages are then adjusted for proper offset, gain, and linearity. The resultant horizontal and vertical screen position voltages are then converted to current outputs by the deflection power amplifiers. These current outputs

are applied to the yoke of the crt assembly and deflect the electron beam to the proper X and Y coordinates on the screen.

Character video logic (VID from the character generator), VG 1/2 video gate logic (from the microprocessor), and vertical deflection return (from the yoke) are applied to the video gates. The video gates produce logic to properly enable the video amplifiers. An appropriate delay is included, so the cathode drive and the deflection outputs are simultaneously applied to the crt assembly.

The video amplifier applies amplified red, green, and blue drive to the crt cathodes. The video amplifier is enabled by logic from the video gates, as described above. The video amplifier bias is controlled by an intensity circuit, as described below.

The front panel BRT knob input and the +28-V dc lighting bus input are applied to an intensity control circuit. This circuit provides analog screen intensity bias output to the video amplifier.

A power monitor circuit generates shutdown/fail protection outputs if crt levels or power levels exceed preset limits. The vertical deflection return voltage (from the yoke) and a sampling of the red, green, and blue video drive signals are applied to a phosphor protect circuit. If any of these signals become excessive, damage to the crt could result. The phosphor protect circuit then applies a discrete which trips the power monitor. The +24-V dc power reference level is also monitored and will trip the power monitor should this level become unacceptable. When either of these two conditions occurs, the power monitor shuts down the high-voltage regulator (to prevent damage to the crt) and toggles a transistor to report a fail condition.

This "fail" discrete is normally at a ground level and switches to a high impedance (open collector) state when a fail condition is detected. This discrete is applied to the ALI for transmission to the air data computer.

The ASI front panel knob positions are directly scanned by the I/O processor on the ALI. This knob position/motion data as well as the "fail" discrete output are combined with ALI knob data (in the ALI) and transmitted to the air data computer.

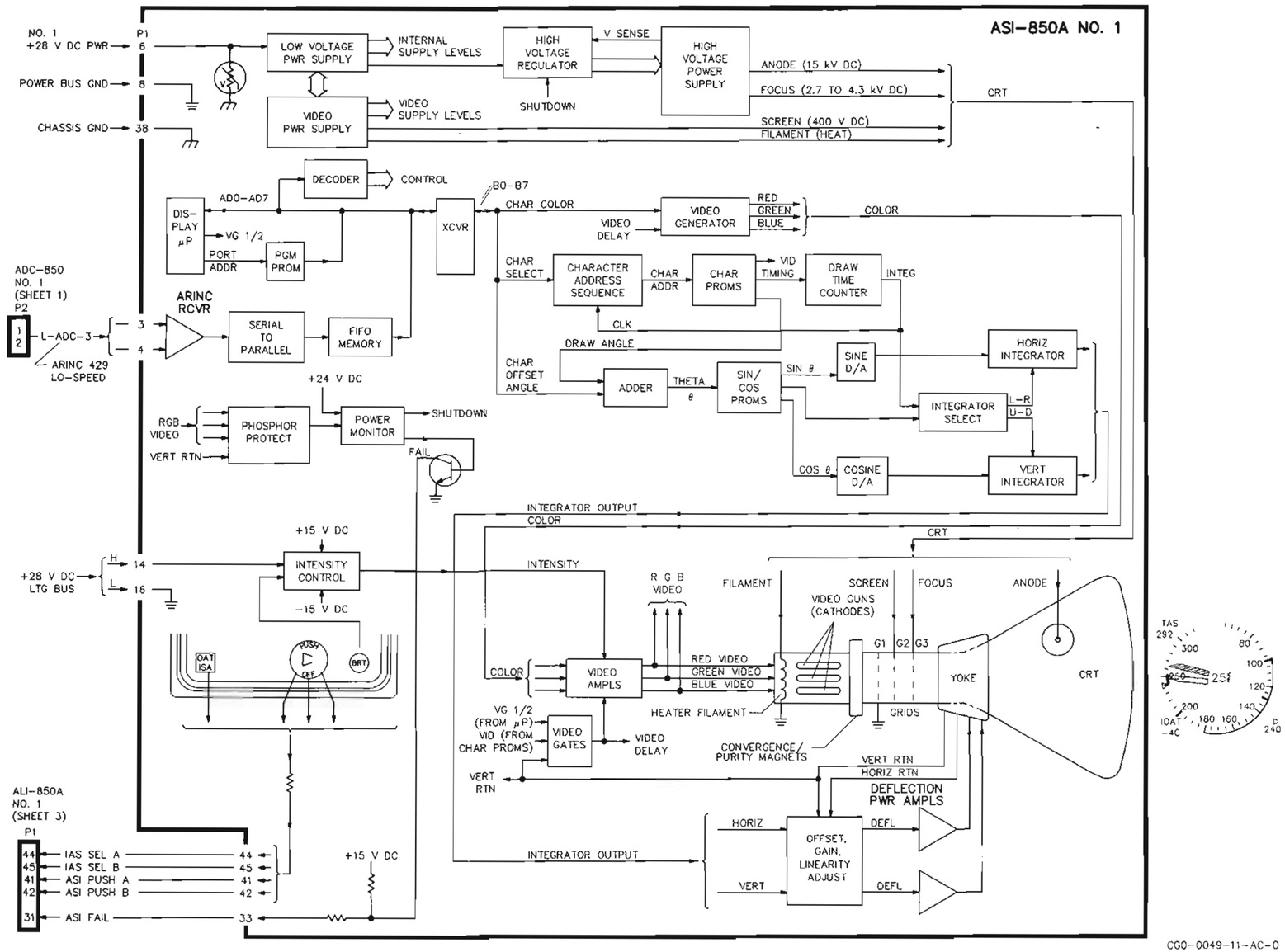

ADS System Schematic
Figure 4-4-1 (Sheet 4 of 8)

Refer to figure 4-4-1, sheet 5. This sheet shows the ADM-850 air data module, as well as the front assembly pneumatic sensors and the ARINC 429 I/O interfaces of the right side ADC-850. The next sheet shows the two microprocessors (absolute and differential) controlling these functions.

The following ADC absolute circuits are shown on this sheet: the ADM interface, the ARINC 429 low-speed interfaces, and the absolute air data sensor circuit. The following ADC differential circuits are shown on this sheet: the ADM interface and the differential air data sensor circuit. Note that other absolute and differential circuits are shown on sheet 6.

The ADC handles all ARINC 429 interfaces using a single ARINC UART. This UART is accessed by the absolute microprocessor through a transceiver circuit. The RA GP BUS 1 data bus input from the IAPS supplies FCS selected air data reference values. This ARINC input and a sampling of the UART output are multiplexed to the receive port of the UART. This data is then read by the microprocessor through the absolute data bus. When the UART is enabled to transmit, microprocessor generated data is applied to the UART and then serially transmitted to three ARINC drivers. The R-ADC-1 output bus is applied to an input/output concentrator in the IAPS system. The R-ADC-2 output bus is applied to the onside computer in the AHS system. The R-ADC-3 output bus is applied to the onside ALI and the ASI indicators.

Internal ADM and ADC operation is described on a previous page.

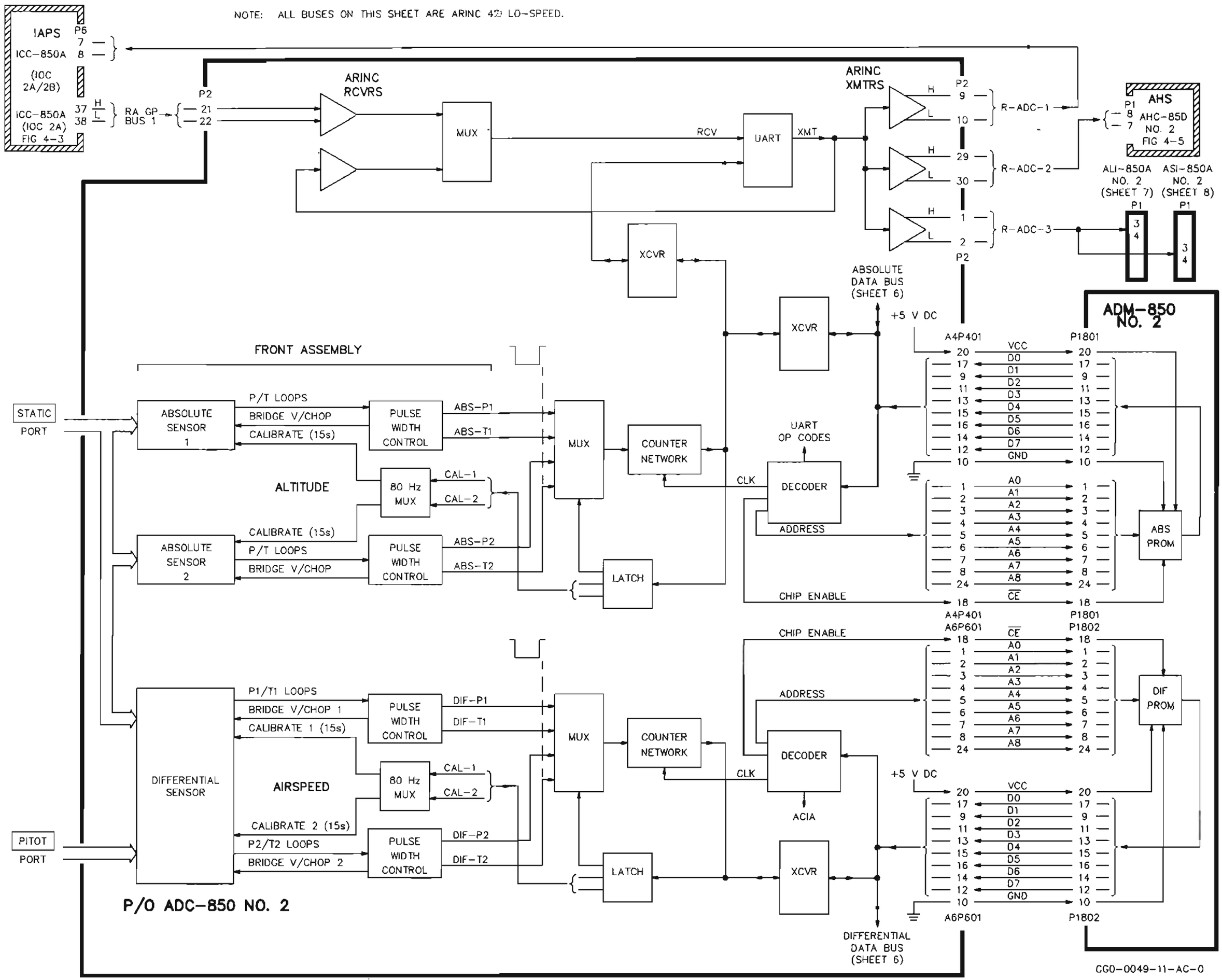

ADS System Schematic
Figure 4-4-1 (Sheet 5 of 8)

Refer to figure 4-4-1, sheet 6.

The right ADC-850 is powered by the no. 2 +28-dc aircraft supply. Internal ADC operation is described on a previous page.

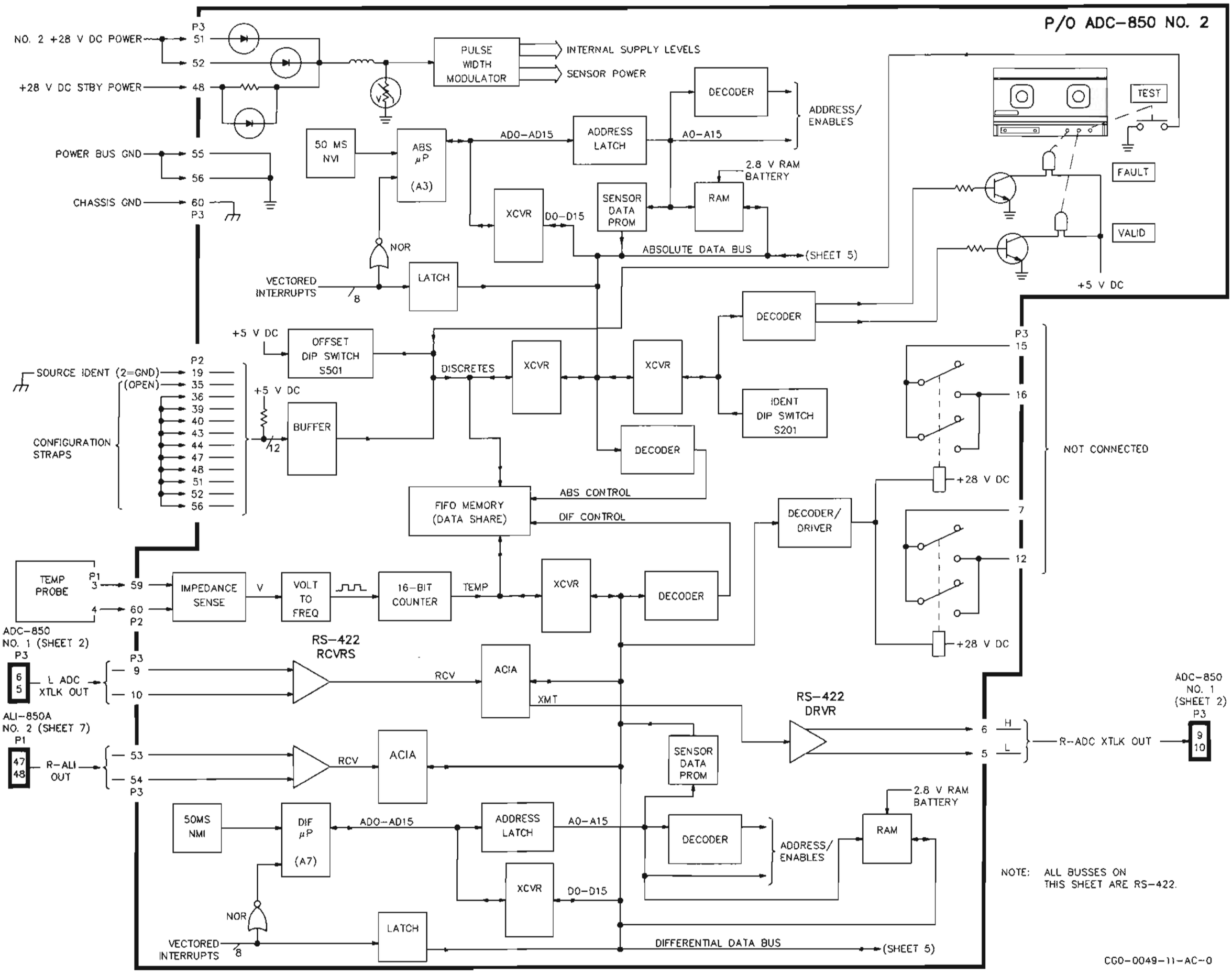

ADS System Schematic
Figure 4-4-1 (Sheet 6 of 8)

The no. 2 ALI-850A displays right side altitude and vertical speed data. Refer to figure 4-4-1, sheet 7.

The right ALI is powered by the no. 2 +28-V dc aircraft supply. Internal ALI operation is described on a previous page.

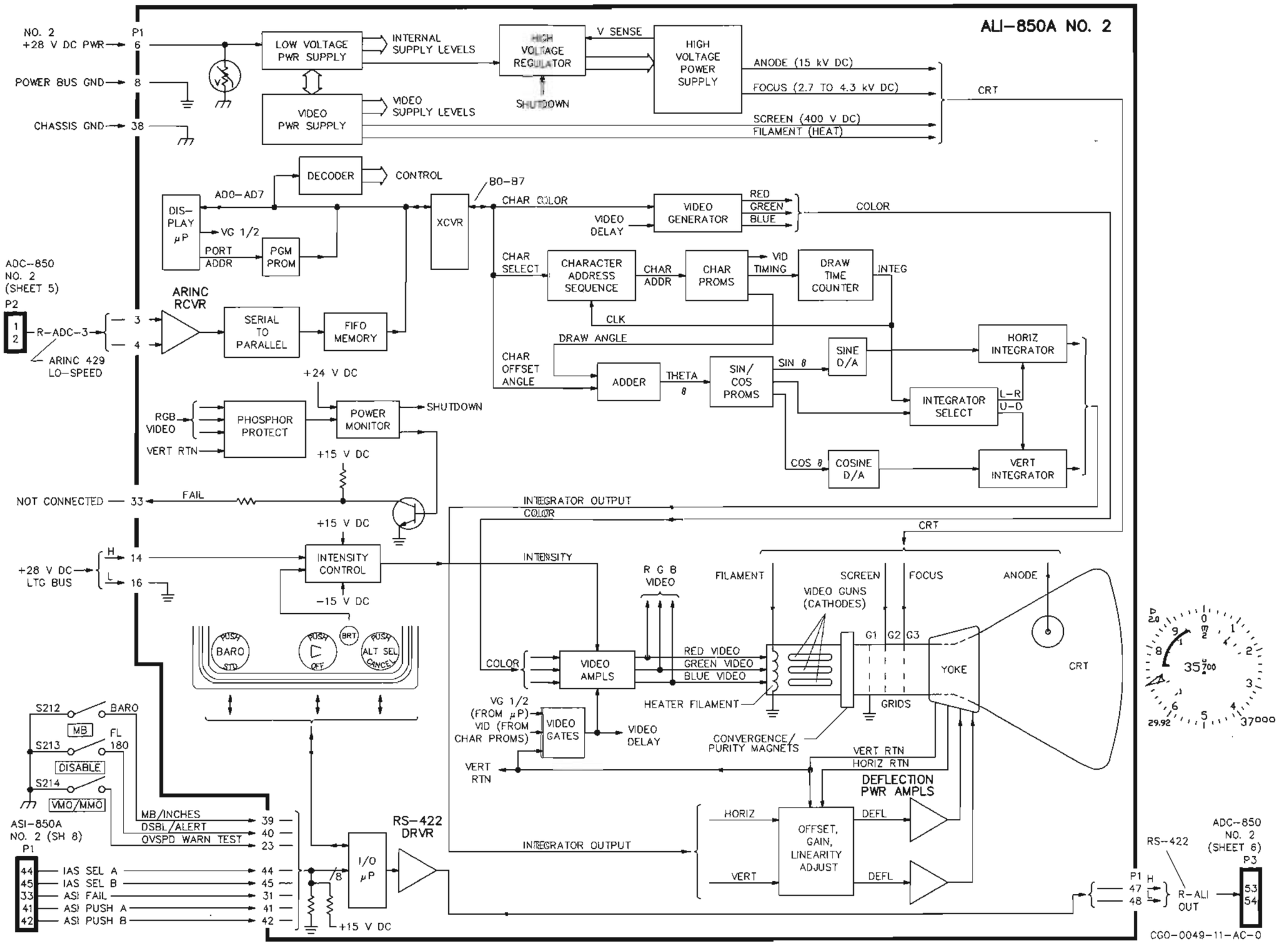

ADS System Schematic
Figure 4-4-1 (Sheet 7 of 8)

The no. 2 ASI-850A displays right side airspeed and temperature data. Refer to figure 4-4-1, sheet 8.

The right ASI is powered by the no. 2 +28-V dc aircraft supply. Internal ASI operation is described on a previous page.

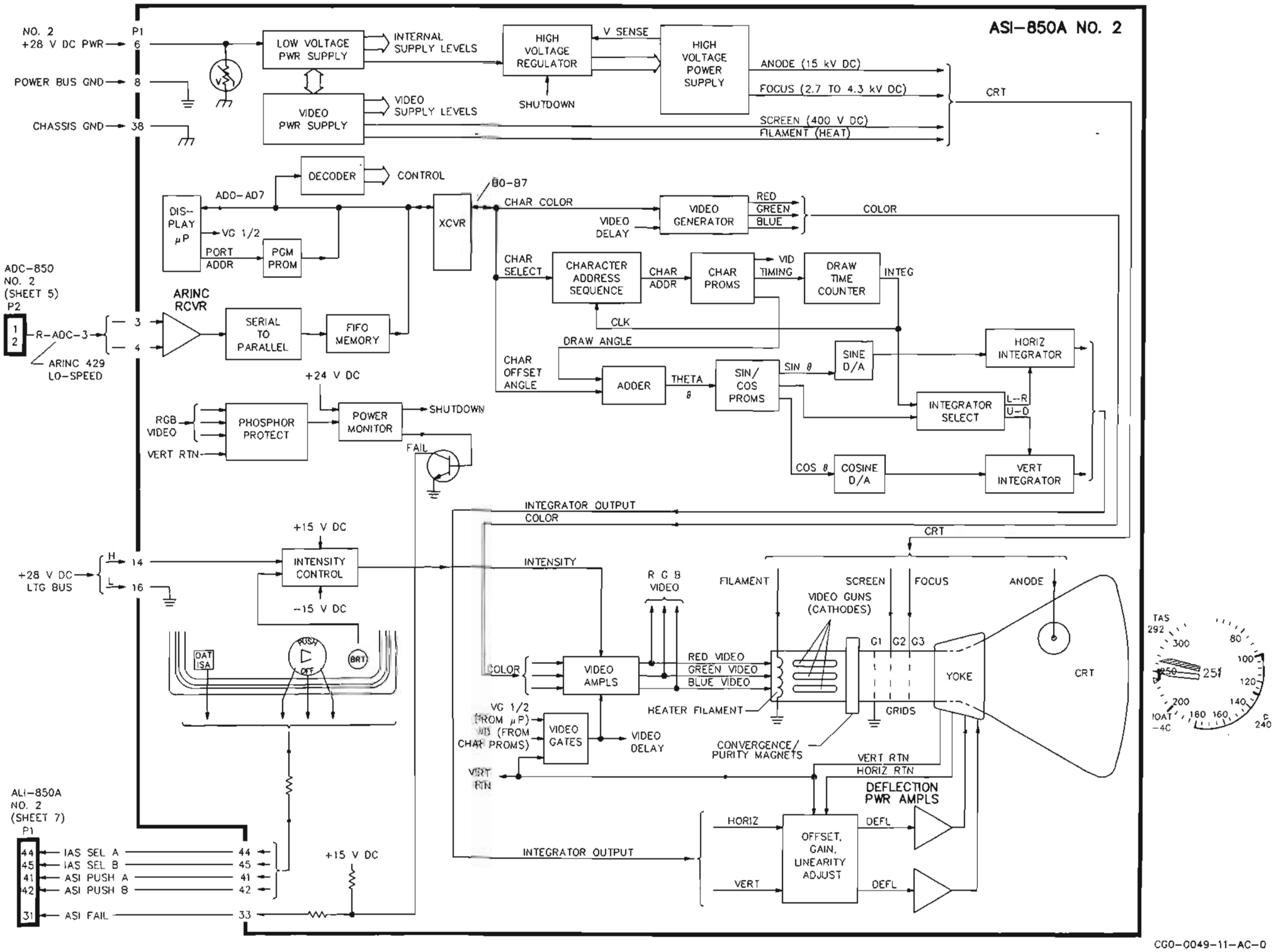

ADS System Schematic
Figure 4-4-1 (Sheet 8 of 8)

This page intentionally left blank.

4.3.4 AHS (Attitude Heading System)

4.3.4.1 Overview

The AHS system provides attitude gyro, directional gyro (compass), and accelerometer functions. The AHS contains two remote mounted attitude heading computers, two internal compensation modules, and two flux detector units. The AHS is a dual system; the no. 1 (pilot side) system is identical to the no. 2 (copilot) system. Refer to figure 4-5. Each LRU is described below:

AHC-85D No. 1 Attitude Heading Computer
ICU-85 No. 1 Internal Compensation Unit
FDU-70 No. 1 Flux Detector Unit
AHC-85D No. 2 Attitude Heading Computer
ICU-85 No. 2 Internal Compensation Unit
FDU-70 No. 2 Flux Detector Unit

The no. 1 AHC-85D provides pitch, roll, and stabilized magnetic heading data for the primary displays and the flight control system. Body rates and linear acceleration outputs also are generated for use by the flight control system. The AHC receives digital true airspeed and vertical speed from the onside air data system (ADS), magnetic flux sensor input from the onside FDU-70, compass compensation from the onside ICU-85, and STRUT switch logic from the aircraft data acquisition system (ADAS). This input data and internal piezoelectric sensor data is processed by the AHC and then applied to the left side input/output concentrators (IAPS), the left flight control computer (FCS), and the PFD/ND primary displays (IDS). A discrete initialization output is also provided to the ADAS system.

The no. 1 ICU-85 is a compensator module that plugs into the front of the no. 1 AHC-85D. The ICU contains potentiometers that are adjusted to electrically compensate for hard iron errors and flux detector misalignment.

The no. 1 FDU-70 senses the horizontal component of the earth's magnetic field. The FDU provides flux sense outputs to the no. 1 AHC-85D, which are used to compute the aircraft magnetic heading angle.

The copilot (no. 2) AHS system operates identically to the no. 1 system described above. At this level of description, the only difference between the two systems is the L/R designation of the digital data bus outputs from the computers.

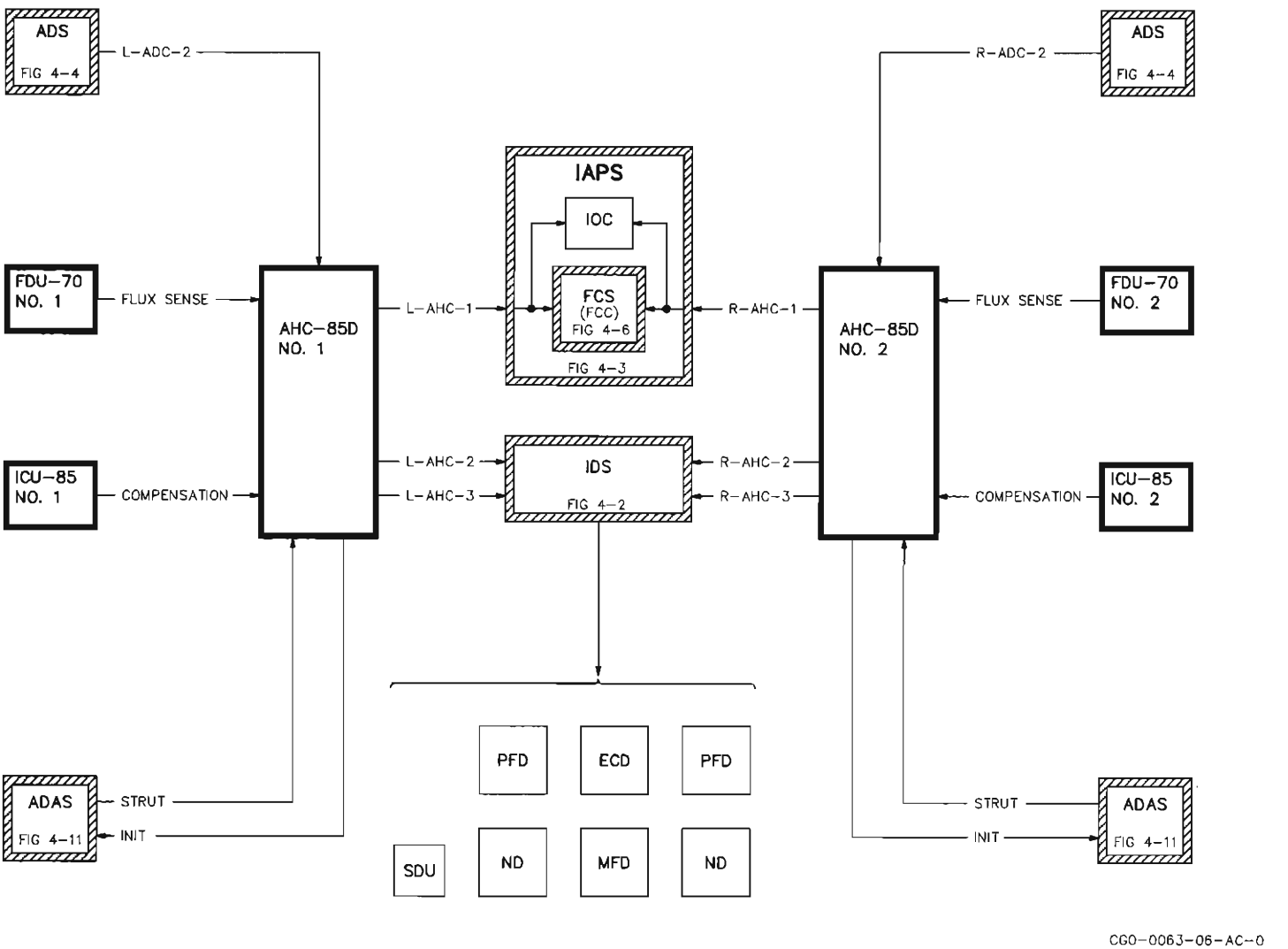

AHS (Attitude Heading System) Overview
Figure 4-5

4.3.4.2 System Schematic

Refer to figure 4-5-1, sheet 1. This sheet shows the no. 1 FDU-70; the no. 1 ICU-85; and the heading, compensation, initialization, and ARINC 429 I/O interface circuits of the no. 1 AHC-85D. The next sheet shows the microprocessor controlling these AHC functions.

The FDU is a 2-axis sensor that measures the horizontal component of the earth's magnetic field and generates outputs that are proportional to the sine and the cosine of the aircraft magnetic heading angle. The FDU consists of two orthogonally positioned coils, each suspended in the horizontal plane. Each coil contains a primary (excitation) and a secondary (sensing) winding. The primary winding of each coil is excited by a 400-Hz signal generated in the AHC. One secondary coil winding returns a signal to the AHC that is proportional to the sine of the magnetic heading angle; the other secondary winding returns a signal proportional to the cosine of the magnetic heading angle.

The FDU interface is controlled by the AHC heading circuit. This circuit provides control to the FDU and converts the sine/cosine signals from the FDU into heading information for the microprocessor. This circuit contains the 400-Hz triangle wave generator which applies excitation to the coils in the FDU. The sensed sine/cosine signals are received from the FDU through a multiplexer, which is controlled by the flux detector electronics circuit. This circuit processes the variable duty cycle FDU outputs into analog dc voltages. The resultant dc sine and cosine heading voltages are applied through the heading multiplexer onto the microprocessor data bus. An offset also is generated and summed with the triangle wave excitation to compensate for non-uniformities in the earth's magnetic field.

The ICU is a plug-in module that provides the AHC compensation function. Compensation cancels "hard iron" errors (single cycle compensation) and flux detector misalignment (index compensation). The AHC provides 5-V dc excitation to all three potentiometers in the compensator. A switch on the ICU module selects setup mode. In setup mode, the potentiometers are adjusted (according to an alignment procedure) to provide specific dc voltage bias corresponding to the sine, cosine, and index compensations for that installation. Sine compensation cancels north/south "hard iron" error. Cosine compensation cancels east/west "hard iron" error. Index compensation cancels FDU misalignment (heading) error. After these three potentiometers have been properly adjusted, the setup switch is turned off.

The ICU interface is controlled by the ICU compensation circuit. This circuit contains a buffer and a multiplexer. The ICU provides a setup mode discrete and the sine/cosine/index compensation voltages to this circuit. The setup mode logic discrete is applied through a buffer onto the microprocessor data bus. The three compensation voltages are applied through the compensation multiplexer onto the microprocessor data bus.

The initialization interface consists of a +28-V dc driver controlled by the microprocessor data bus. Data is generated to apply a discrete +28-V dc (100-mA) L-AHC INIT output to the DAU data acquisition unit during AHC initialization.

The ARINC 429 I/O interface consists of an air data receiver circuit and three high-speed transmitter circuits. An ARINC UART controls this interface. The microprocessor data bus brings air data input from the UART to the processor during receive mode and carries AHC output data from the processor to the UART during transmit mode. The processor generates UART control to select receive or transmit mode.

The L-ADC-2 ARINC 429 low-speed data bus is applied from the no. 1 air data computer to a receiver circuit in the AHC. This data bus contains TAS and VS information required by the AHC microprocessor. This input data is applied to the receive port of the UART and read by the processor using the data bus.

Microprocessor generated output data is applied to the UART. This data contains processed pitch/roll attitude, heading, body rate, and linear acceleration parameters. When the UART is enabled to transmit, this output data is applied to three ARINC 429 high-speed drivers. The L-AHC-1 data bus is applied to both of the left input/output concentrators (and to the left FCC) in the IAPS. The L-AHC-2 output bus is applied to the onside PFD and ND primary flight displays in the IDS system. The L-AHC-3 output bus is applied to the cross-side PFD and ND primary flight displays (and to the sensor display driver) in the IDS system.

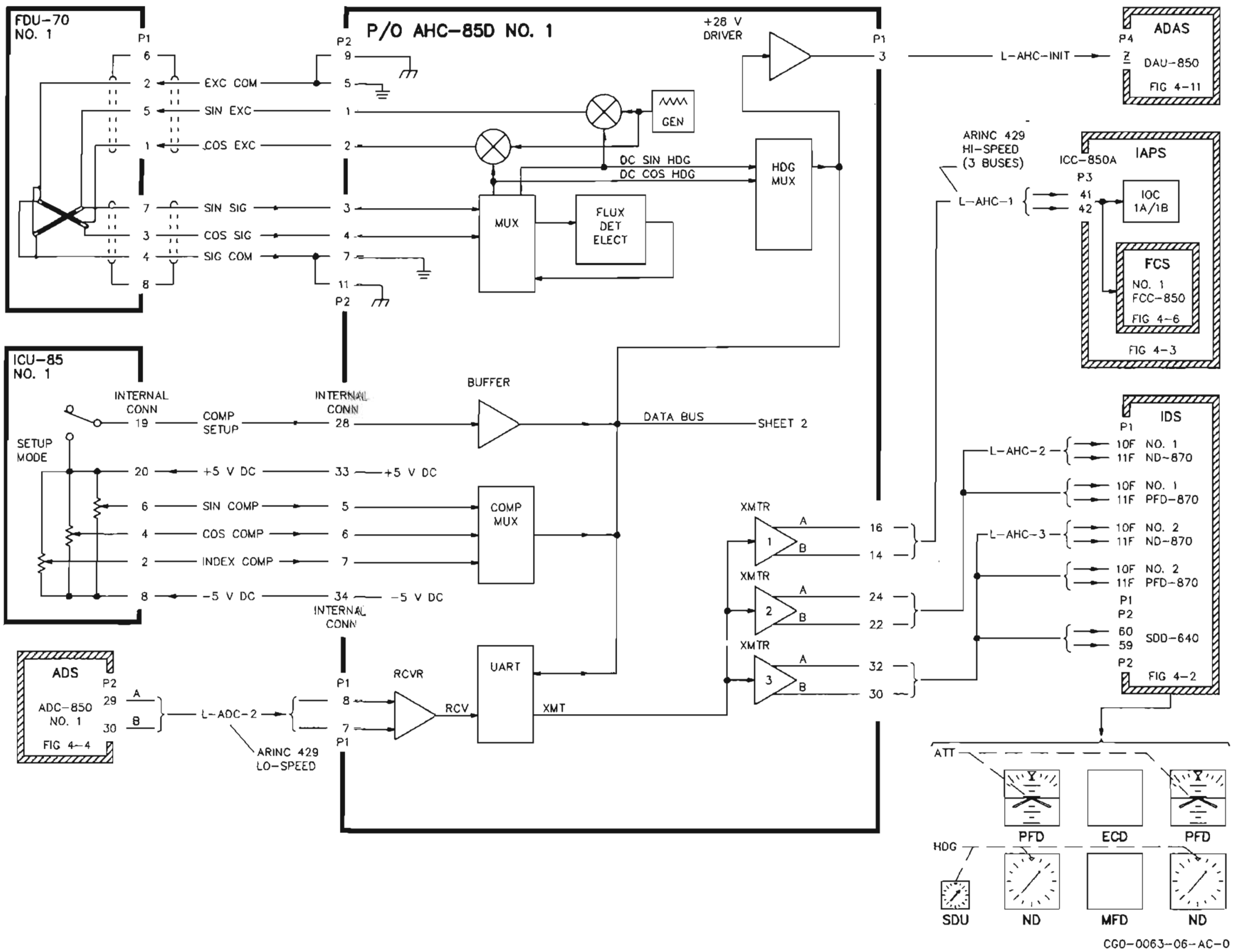

AHS System Schematic
Figure 4-5-1 (Sheet 1 of 4)

Refer to figure 4-5-1, sheet 2. This sheet shows the other half of the no. 1 AHC-85D computer. This portion of the AHC contains the power supply, microprocessor, inertial sensors, and discrete I/O interface.

The left AHC is powered by the no. 1 +28-V dc aircraft supply. A separate set of pins provides +28-V dc battery backup power. The power supply circuits use switching and linear regulators to generate internally required voltage levels. An external AHRS REINIT switch on the reversionary panel applies a momentary ground to this circuit; this switch allows the pilot to reinitialize in flight should the AHS require a reset.

The battery backup circuit will switch on and power the AHC for approximately 3 minutes should the primary +28-V dc input power level drop below a preset limit. The backup circuit also powers RAM memory to retain key parameters during a power loss. Note that the AHC will not initialize on battery power alone.

The power supply also contains a power monitor circuit. This circuit causes the data bus outputs to indicate "invalid" data, should any of the various power supply outputs exceed preset limits.

The microprocessor controls AHC operation using a 16-bit bidirectional data bus. This data bus gathers the following information for use by the processor: nonvolatile RAM data, EPROM memory data, air data valid logic, sensor attitude data, and discrete data. Note that this bus also gathers heading, compensation, and ADS data as described previously for sheet 1 of the system schematic. This data bus also provides microprocessor generated initialize logic and ARINC output information, as described for sheet 1. A timing control circuit allows the microprocessor to apply chip select enables to various devices in the AHC.

The nonvolatile RAM retains key AHS parameters during a power loss. EPROM memory contains executable routines and control algorithms required by the processor to perform the AHC function. The digital air data valid line buffers a monitor input to the processor. Sensor attitude data provides pitch, roll, body rates, and acceleration information to the processor. The discrete data input provides selectable options and configuration information to the processor.

Attitude data is sensed by two identical inertial sensors. Each inertial sensor contains combinational rate/acceleration sensors (bimorphs) to provide 2-channel redundancy for monitoring purposes. Each sensor assembly receives independent wheel power and motor drive excitation for individual integrity. Sensor operation is based on the use of piezoelectric accelerometers. Each sensor contains four miniature piezoelectric elements mounted on a spinning structure. A synchronous motor ensures a constant spin speed. Two rate-sensing elements are mounted orthogonal to the spin axis, and two acceleration sensing elements are mounted along the spin axis of the sensor assembly. Each sensor element is a cantilevered piezoelectric "bender" that generates a voltage proportional to the bending moment caused by acceleration force on the mass of the element. An alignment circuit maintains sensor calibration. The resultant rate and acceleration voltages are FM converted and applied to gyro I/O cards. These cards demodulate the dual rate and acceleration signals, scale them, and then apply them to the attitude multiplexer. This multiplexer loads the sensor 1 and the sensor 2 information onto the microprocessor data bus.

Discrete I/O data is read through a latch by the processor. This discrete data consists of strut switch logic, parity logic, box orientation logic, and source identification logic. Each of these inputs is tied to a pullup resistor at the latch input. A FAST SLAVE switch logic input is also applied to this latch circuit.

The strut switch logic input is applied from the ADAS system. This aircraft discrete is a logic ground when the aircraft is on the ground and an open when the aircraft is airborne. The parity logic strap is wired to ground in this particular aircraft. The box orientation logic straps are wired as shown, since the AHC is mounted with its front facing to the left; these straps define sensor axes to the processor. The source ident straps are wired so that P1-40 is open and P1-41 is grounded; this defines to the processor that the AHC is on the left side of the aircraft.

A FAST SLAVE switch on the reversionary panel applies a momentary +28 V dc to cause the AHC to fast slave to the FDU heading. This switch input is applied directly to the latch input (no pullup resistor). Note that a power-up orientation pin (P1-48) is also shown, but not connected at this time.

The AHC also provides extensive in-line monitoring to detect failures affecting attitude or heading data.

These monitors include sensor rate comparison, sensor acceleration comparison, ROM (checksum) monitor, RAM (bit pattern) monitor, bias compensation (initialization) monitor, watchdog timer (processor cycle time), power supply (output levels) monitor, wheel speed (sensor spin tolerance) monitor, and a flux detector (sine/cosine relationship) monitor. These monitors cause the microprocessor to flag the data outputs as "invalid" if an internal failure is detected.

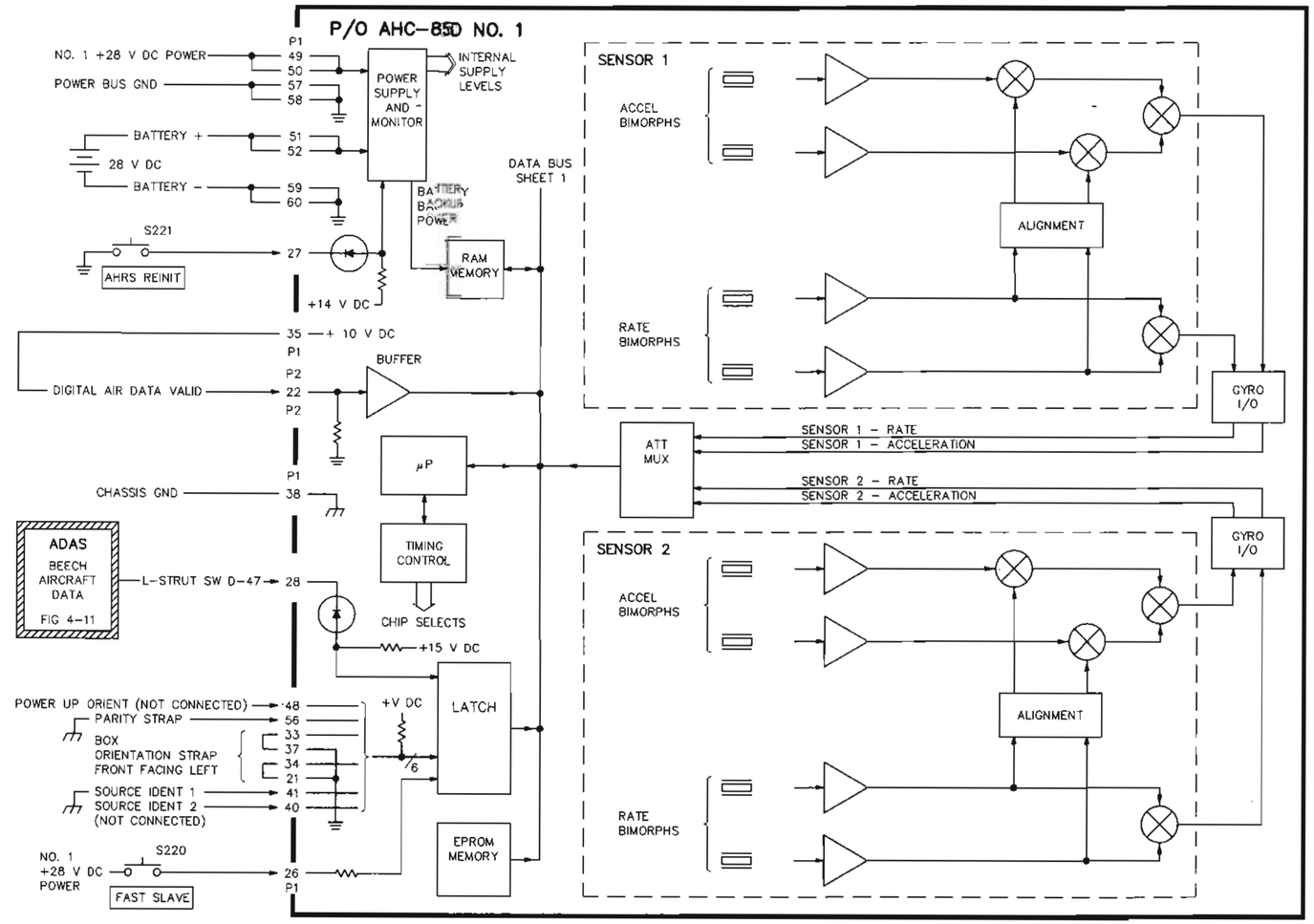

AHS System Schematic
Figure 4-5-1 (Sheet 2 of 4)

Refer to figure 4-5-1, sheet 3. This sheet shows the no. 2 FDU-70; the no. 2 ICU-85; and the heading, compensation, initialization, and ARINC 429 I/O interface circuits of the no. 2 AHC-85D. The next sheet shows the microprocessor controlling these AHC functions.

Internal FDU, ICU, and AHC operation is described on a previous page.

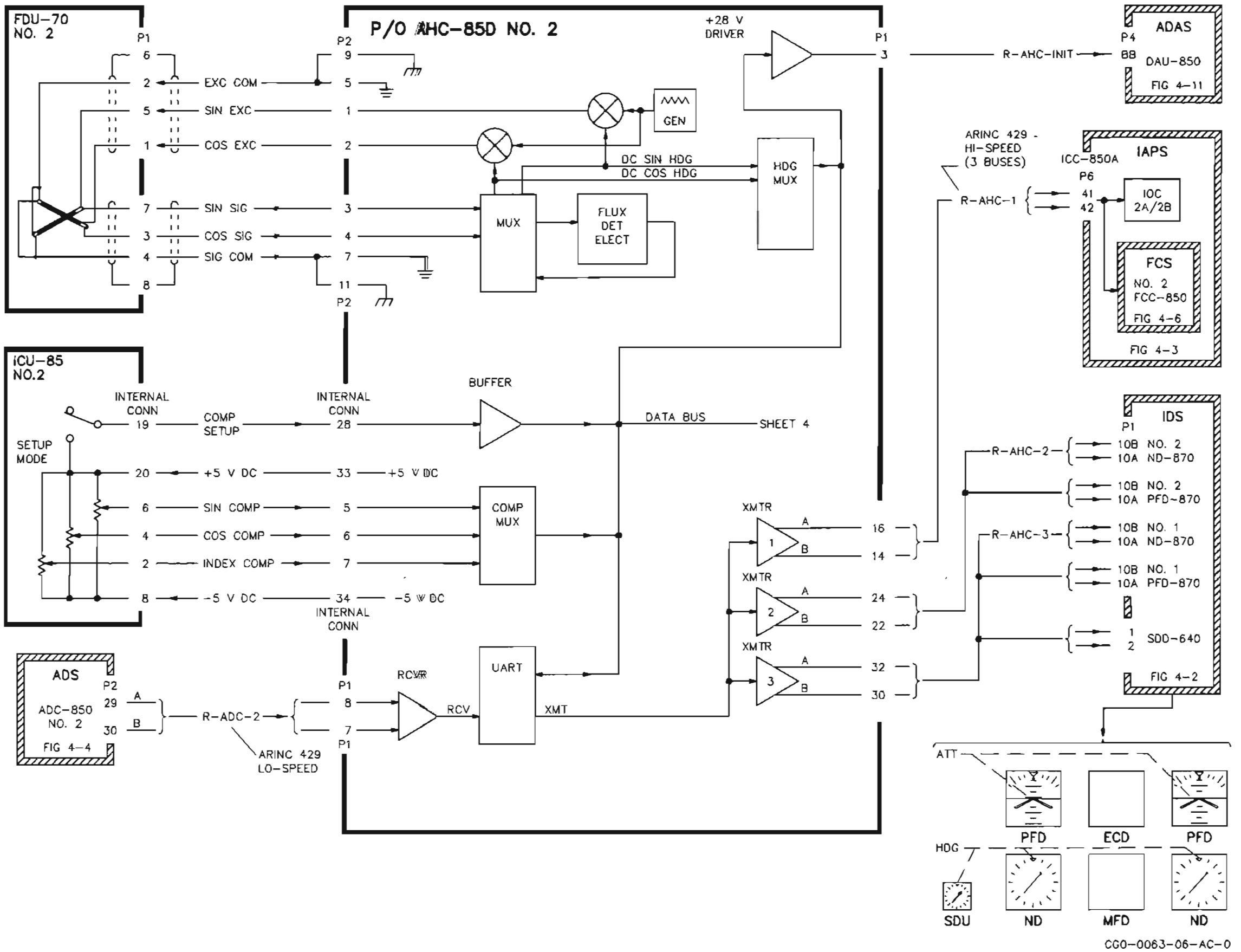

AHS System Schematic
Figure 4-5-1 (Sheet 3 of 4)

Refer to figure 4-5-1, sheet 4. This sheet shows the other half of the no. 2 AHC-85D computer. This portion of the AHC contains the power supply, microprocessor, inertial sensors, and discrete I/O interface.

Internal AHC operation is described on a previous page.

ADDENDUM 2

TO

STARSHIP 1 AVIONICS SYSTEM

SYSTEM MANUAL

PART NUMBER 523-0774076, DATED 14 JAN 1989

Insert this addendum sheet facing page 4-99 of the Theory of Operation Section of the manual

Pin P1-48 (POWER UP ORIENT) should connect to <u>ground</u> (not open).

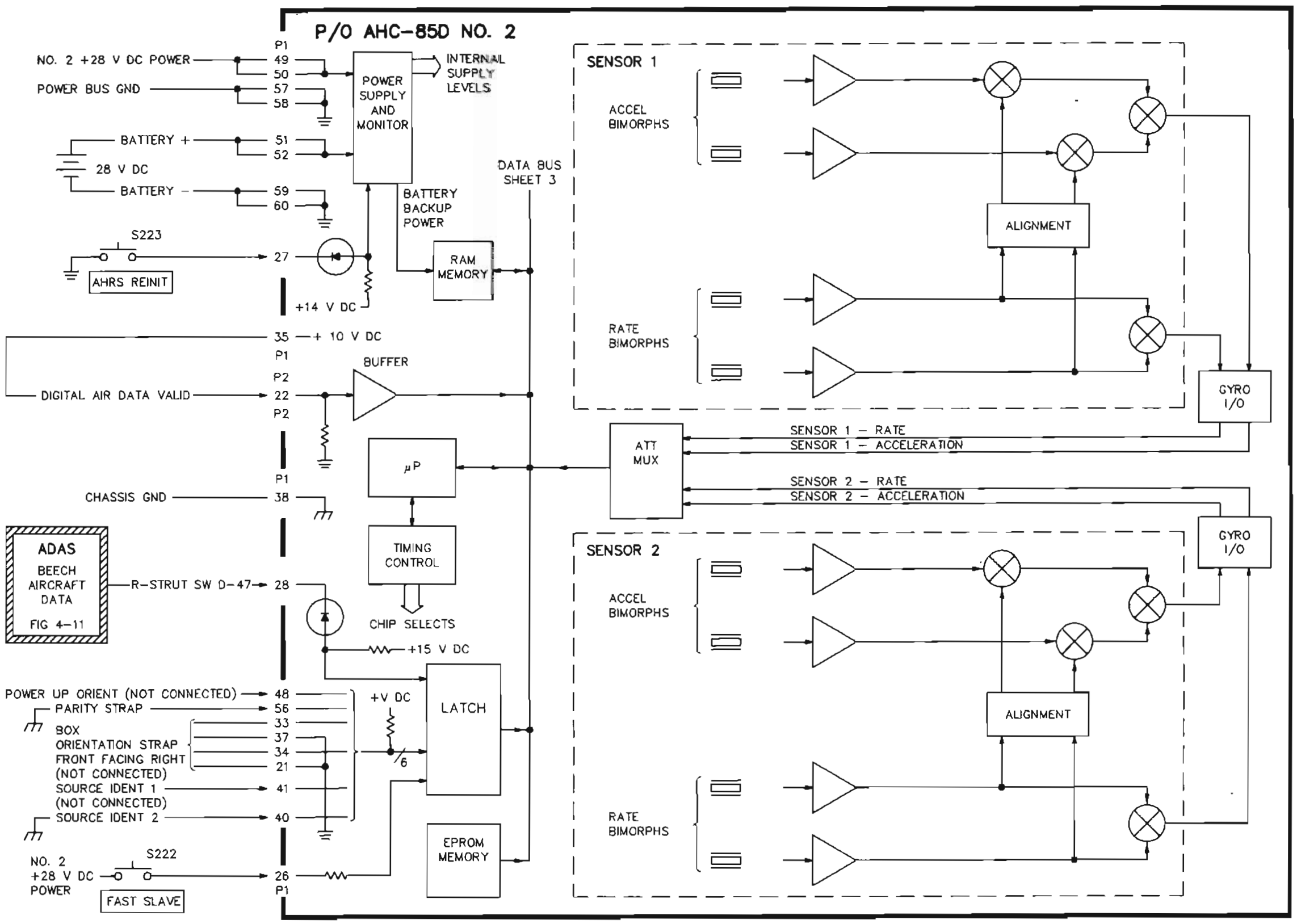

AHS System Schematic
Figure 4-5-1 (Sheet 4 of 4)

This page intentionally left blank.

4.3.5 FCS (Flight Control System)

4.3.5.1 Overview

The FCS system provides 3-axis autopilot, flight guidance computation, and trim functions. The FCS contains two flight control computers, two flight guidance mode select panels, an autopilot control panel, three primary servos, and a trim coupler. The FCS is a dual system; the no. 1 (pilot side) system is identical to the no. 2 (copilot) system. Each MSP-850A controls one FCC-850; the APP-85D controls both systems. The two systems operate together to drive the servos and trim coupler. Refer to figure 4-6. Each LRU is described below:

FCC-850 No. 1 Flight Control Computer
MSP-850A No. 1 Mode Select Panel
FCC-850 No. 2 Flight Control Computer
MSP-850A No. 2 Mode Select Panel
APP-85D Autopilot Panel
SVO-85A Aileron Servo
SVO-85B Rudder Servo
SVO-85C Elevator Servo
ATC-81 Automatic Trim Coupler

The no. 1 FCC-850 is located in the IAPS card cage. Computation circuits gather flight director mode selection data from the no. 1 MSP-850A, attitude data from the AHS system, discrete data from cockpit switches, concentrator (IOC) data from the IAPS system, pitch/roll command and engage logic operator input data from the APP-85D, and crosstalk data from the no. 2 FCC. Processed data output from the FCC includes data bus outputs to the concentrators in the IAPS system, flight director (command) data applied through the IAPS to the IDS system, monitor interlock logic to the APP-85D, and crosstalk data to the no. 2 FCC. The FCC-850 also contains servo-amplifier circuits. These circuits apply motor drive to one side of each of the SVO-85( ) servos and process rate feedback inputs from each servo. A trim circuit applies arm and command logic to one channel of the pitch trim system and processes pitch trim rate feedback.

The no. 1 MSP-850A is a panel mounted unit used by the pilot to select left side flight director modes. When a pushbutton is pressed, this FD mode select request is applied to the no. 1 FCC-850. If conditions are appropriate for this mode, an acknowledge is returned to the MSP. Pushbutton mode request logic from the APP-85D is also applied through the MSP to the FCC.

The no. 2 FCC-850 is located in the IAPS card cage. Computation circuits gather flight director mode selection data from the no. 2 MSP-850A, attitude data from the AHS system, discrete data from cockpit switches, concentrator (IOC) data from the IAPS system, pitch/roll command and engage logic operator input data from the APP-85D, and crosstalk data from the no. 1 FCC. Processed data output from the FCC includes data bus outputs to the concentrators in the IAPS system, flight director (command) data applied through the IAPS to the IDS system, monitor interlock logic to the APP-85D, and cross-talk data to the no. 1 FCC. The FCC-850 also contains servo-amplifier circuits. These circuits apply motor drive to one side of each of the SVO-85( ) servos and process rate feedback inputs from each servo. A trim circuit applies arm and command logic to one channel of the pitch trim system and processes pitch trim rate feedback.

The no. 2 MSP-850A is a panel mounted unit used by the copilot to select right side flight director modes. When a pushbutton is pressed, this FD mode select request is applied to the no. 2 FCC-850. If conditions are appropriate for this mode, an acknowledge is returned to the MSP. Pushbutton mode request logic from the APP-85D is also applied through the MSP to the FCC.

The APP-85D is a pedestal mounted unit used by the pilot and the copilot to input autopilot commands. The AP and YD levers apply engage request logic to both FCC computers; if conditions are appropriate to engage, both computers respond with proper interlock logic. The pitch and roll knobs apply analog attitude commands to both computers. TURB and AP XFR buttons apply mode request logic (through the MSP's) to both FCC computers. Pilot/copilot aircraft switches and logic from the trim system apply disengage discretes to the APP.

The SVO-85A aileron servo physically positions aircraft control surfaces in the roll axis. Differential motor drive is applied from each FCC computer. A rate feedback analog is applied to computation circuits in both computers. Clutch (engage) power is applied by the APP.

The SVO-85B rudder servo physically positions aircraft control surfaces in the yaw axis. Differential motor drive is applied from each FCC computer. A rate feedback analog is applied to computation circuits in both computers. Clutch (engage) power is applied by the APP.

The SVO-85C elevator servo physically positions aircraft control surfaces in the pitch axis. Differential motor drive is applied from each FCC computer. A rate feedback analog is applied to computation circuits in both computers. Clutch (engage) power is applied by the APP.

The FCC-850 computers provide arm and command logic to the pitch trim system. This system is supplied by Beech and is considered part of the airframe. The pitch trim arm and command outputs cause the trim system to run and null the aerodynamic forces that the primary servo is required to hold. As pitch trim runs, rate feedback is generated and applied to monitor circuits in both computers. Other logic inputs to the pitch trim system include manual trim commands (from the control wheel trim switches) and IAS trip logic (from the left ADS system). A disengage output is applied to the APP if a trim failure is detected.

The ATC-81 automatic trim coupler monitors the aileron and rudder servo-motor drive and provides arm/command voltages to the roll and yaw trim systems. Operation is similar to that described above for pitch trim.

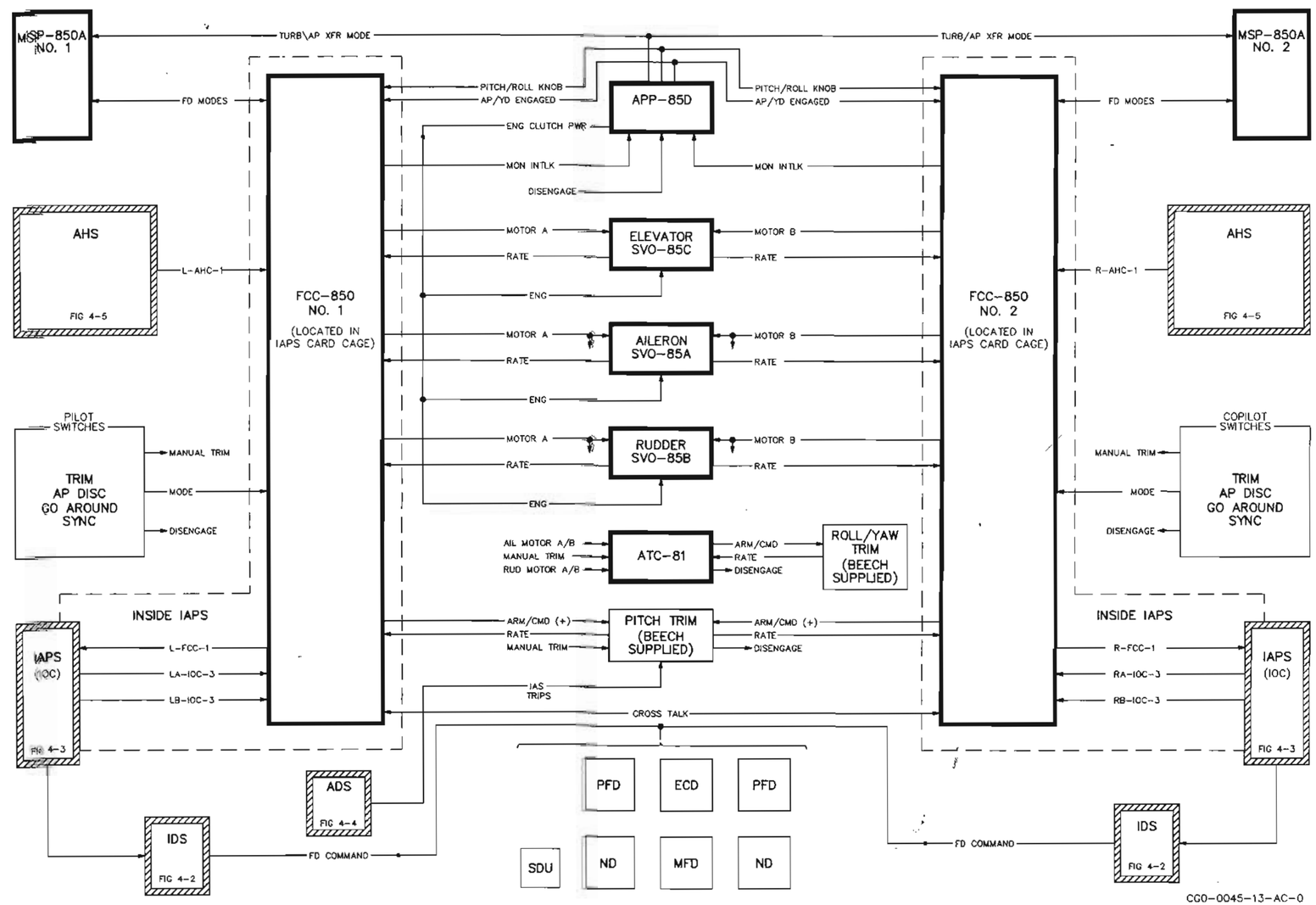

FCS (Flight Control System) Overview
Figure 4-6

4.3.5.2 System Schematic

Refer to figure 4-6-1, sheet 1. This sheet shows the APP-85D autopilot panel and the two GO AROUND aircraft switches.

The APP contains pushbuttons to select/deselect TURB and AP XFR modes, interlocked AP and YD engage levers, and pitch/turn knobs to manually input attitude commands. These are the pilot and copilot autopilot controls.

TURB mode is selected to soften autopilot gains during turbulent conditions. One side of the 2-section TURB switch is wired to +28-V dc A/B power. When the button is pressed, +28-V dc A power is applied momentarily to the left MSP and +28-V dc B power is applied momentarily to the right MSP. These voltages are applied through the MSP's to both FCC computers, to request TURB mode. The right FCC computer then returns acknowledge data, which causes the right MSP to apply a TURB ANN logic ground which lights the annunciator lamp in the TURB button. Press the button again to deselect TURB mode.

AP XFR mode is selected to cause the autopilot to fly flight guidance commands from the right (B) FCC computer. Operation of the AP XFR switch and annunciator is identical to that described for TURB mode. Press the button again to deselect AP XFR mode and cause the autopilot to fly flight guidance commands from the left (A) FCC computer.

The APP has interlocked AP and YD engage levers. When the AP lever is raised, the YD lever also raises. When the YD lever is lowered, the AP lever also drops.

The AP engage lever is raised by the operator to engage the autopilot (and also the yaw damper, since the levers are interlocked). Relays K1 through K4 must all be energized, or the AP engage coil cannot hold the lever up. The following conditions must all occur for the autopilot to remain engaged:

	P1-13 = +28 V dc	No. 1 aircraft power present
	P1-25 = +28 V dc	Valid AP MON A logic from left FCC
	P1-29 = +28 V dc	Valid AP MON B logic from right FCC
	P1-30 = +28 V dc	Valid YD MON A logic from left FCC
	P1-32 = +28 V dc	Valid YD MON B logic from right FCC
K1:	P1-1 = +28 V dc	Neither AP DISC switch pressed (both A sections) and valid yaw trim monitors
	P1-11 = open	Neither GO AROUND switch pressed (both A sections)
	P1-19 = open	Valid TRIM MON A logic from ATC and valid pitch/roll trim monitors
K2:	P1-23 = +28 V dc	Neither AP DISC switch pressed (both B sections) and valid yaw trim monitors
	P1-21 = open	Neither GO AROUND switch pressed (both B sections)
	P1-15 = open	Valid TRIM MON B logic from ATC and valid pitch/roll trim monitors
K3:	P1-3 = +28 V dc	Neither AP DISC switch pressed (both A sections) and valid yaw trim monitors
K4:	P1-7 = +28 V dc	Neither AP DISC switch pressed (both B sections) and valid yaw trim monitors

If all the above conditions occur, the AP (and YD) levers are held magnetically in the raised ENGAGED position. The AP engage switch then provides valid AP lever logic and aileron/elevator clutch power outputs. +28 V dc A (no. 1 aircraft power) is passed through the switch as valid AP ENG LEVER UP A logic (to left FCC and trim system), AIL ENG CLUTCH power (to aileron servo and ATC), and ELEV ENG CLUTCH power (to elevator servo). +28 V dc B (no. 2 aircraft power) is passed through the switch as valid AP ENG LEVER UP B logic (to right FCC and trim system).

ADDENDUM 2

TO

STARSHIP 1 AVIONICS SYSTEM

SYSTEM MANUAL

PART NUMBER 523-0774076, DATED 14 JAN 1989

Insert this addendum sheet facing page 4-104 of the Theory of Operation Section of the manual

The engage conditions listed for APP pins P1-19 and P1-15 should be defined as follows:

P1-19 = open	Valid TRIM MON A logic from the ATC, <u>no manually applied pitch or roll trim, and the stick shaker is inactive.</u>
P1-15 = open	Valid TRIM MON B logic from the ATC, <u>no manually applied pitch or roll trim, and the stick shaker is inactive.</u>

ADDENDUM 2

TO

STARSHIP 1 AVIONICS SYSTEM

SYSTEM MANUAL

PART NUMBER 523-0774076, DATED 14 JAN 1989

Insert this addendum sheet facing page 4-105 of the Theory of Operation Section of the manual

The input to pin P1-19 of the APP-85D should be stubbed off and labeled "TRIM DISC A (SHEET 8)".

The input to pin P1-15 of the APP-85D should be stubbed off and labeled "TRIM DISC B (SHEET 8)".

Note

The trim disconnect discretes which are OR'd together and applied to these APP disengage inputs are shown on sheet 8.

The output from pin P1-17 of the APP-85D is applied to ATC pin P1-8 and SVO pin P1-C (not P1-E).

The YD engage lever (only) may be raised by the operator to engage just the yaw damper, and not the autopilot. Relays K3 and K4 must be energized, or the YD engage coil cannot hold the lever up. The following conditions must all occur for the yaw damper to remain engaged:

	P1-10 = +28 V dc	No. 2 aircraft power present
	P1-30 = +28 V dc	Valid YD MON A logic from left FCC
	P1-32 = +28 V dc	Valid YD MON B logic from right FCC
K3:	P1-3 = +28 V dc	Neither AP DISC switch pressed (both A sections) and valid yaw trim monitors
K4:	P1-7 = +28 V dc	Neither AP DISC switch pressed (both B sections) and valid yaw trim monitors

If all the above conditions occur, the YD lever is held magnetically in the raised ENGAGED position. The YD engage switch then provides valid YD lever logic and rudder clutch power outputs. +28 V dc A (no. 1 aircraft power) is passed through the switch as valid YD ENG LEVER UP A logic (to left FCC and trim system). +28 V dc B (no. 2 aircraft power) is passed through the switch as valid YD ENG LEVER UP B logic (to right FCC and trim system) and as RUD ENG CLUTCH power (to rudder servo and ATC).

The pitch knob is a wheel assembly that is tied mechanically to the wiper of a potentiometer. This wheel is used by the operator to command an attitude change in the pitch axis. The amount of pitch command is proportional to the amount of knob displacement. This analog voltage is derived from the no. 1 aircraft power input and varies approximately ±2 V dc. A positive voltage corresponds to a pitch-up command. The 2-wire analog is applied to both FCC computers.

The roll knob is a turn assembly that is tied mechanically to the wiper of a potentiometer. This knob is used by the operator to command an attitude change in the roll axis. The amount of roll command is proportional to the amount of knob displacement. This analog voltage is derived from the no. 1 aircraft power input and varies approximately ±4 V dc. A positive voltage corresponds to a roll-right command. The 2-wire analog is applied to both FCC computers.

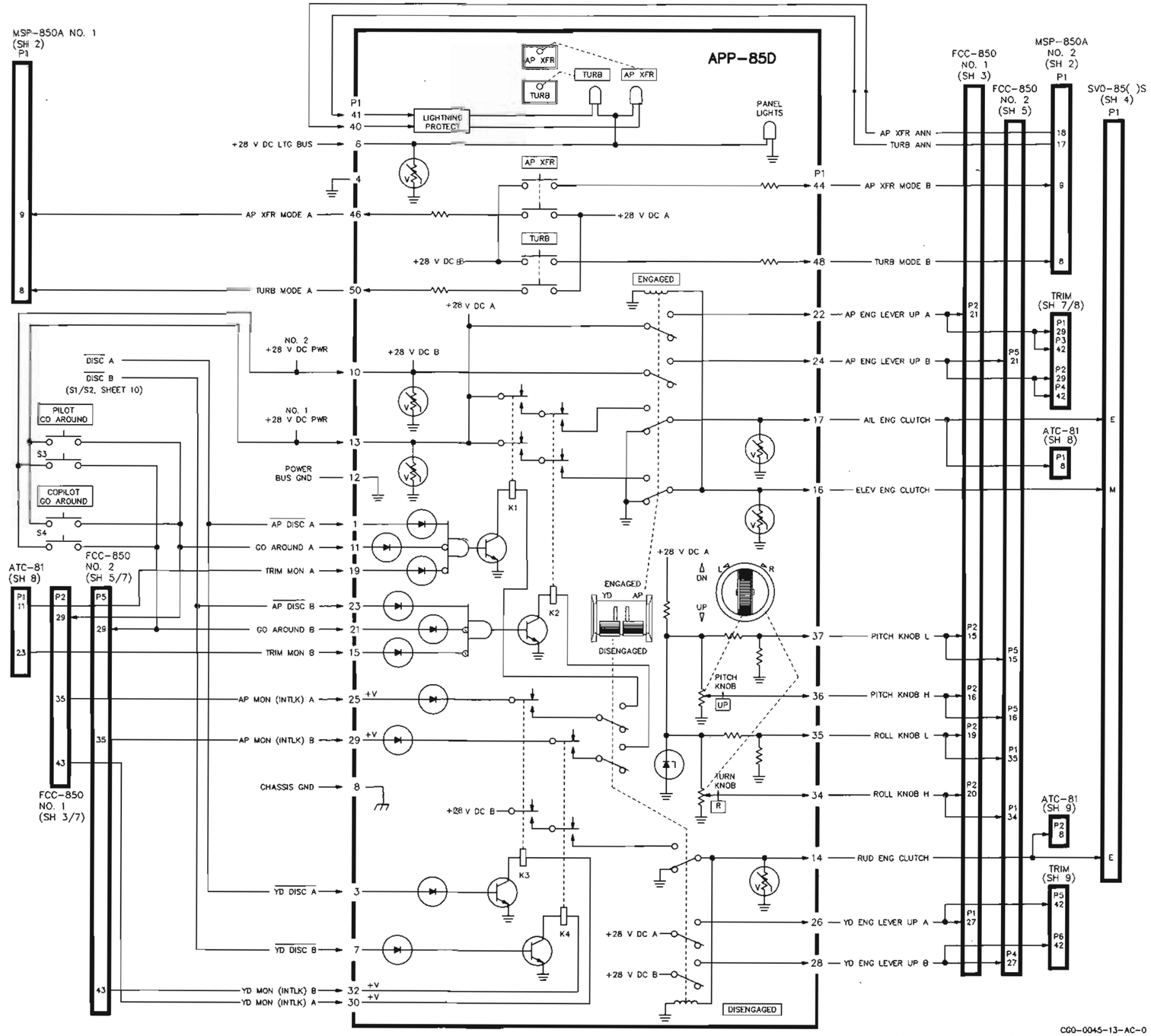

FCS System Schematic
Figure 4-6-1 (Sheet 1 of 10)

Refer to figure 4-6-1, sheet 2. This sheet shows both of the MSP-850A mode select panels. The pilot presses pushbuttons on the left MSP to select/deselect flight guidance modes for the left flight control computer. The copilot presses pushbuttons on the right MSP to select/deselect flight guidance modes for the right flight control computer. The AP XFR mode button on the APP selects which MSP supplies active flight guidance modes to the autopilot.

The no. 1 MSP is described below, followed by a brief list of differences for the no. 2 mode select panel.

A UART circuit controls the MSP input and output data transfer. Inputs to the UART include mode select discrete logic from the MSP/APP buttons and an RS-422 data bus input from the onside FCC computer. UART outputs include annunciator logic and an RS-422 data bus output to the onside FCC computer. A control circuit provides required chip enables and UART timing.

Mode select discrete logic from the MSP pushbuttons and from the APP pushbuttons is input through a latch circuit to the UART. When an MSP button is pressed, +5 V dc is applied to the corresponding latch input. Comparators convert the 28-volt TURB MODE A and AP XFR MODE A logic inputs from the APP into 5-volt logic levels. These 12 pushbutton inputs are latched, read by the UART, and applied through an RS-422 transmitter as the MSP TO FCC A mode request input to the FCC computer.

The FCC processes this mode request data and returns acknowledge information on the FCC TO MSP A data bus. This data bus is applied through an RS-422 line receiver to the receive port of the UART. A parallel decoder then applies appropriate logic to an annunciator driver circuit. This circuit applies a discrete ground to light the annunciator lamp above the pressed pushbutton.

MSP power is provided by a special isolated supply in the left side of the IAPS system. Panel lights are dimmed by the 115-volt lighting bus. Pushbutton annunciator lights are dimmed by the 28-volt lighting bus.

The no. 2 MSP operates the same as the no. 1 MSP described above, with the following differences. The no. 2 MSP communicates with the no. 2 FCC computer using the MSP TO FCC B and the FCC TO MSP B data buses. APP pushbutton logic is received from the "B" sections of the TURB and AP XFR switches. Annunciator driver outputs are wired to apply mode acknowledge logic to the pushbutton annunciators in the APP, as well as to those in the MSP. Isolated MSP power is provided by a supply located in the right side of the IAPS system.

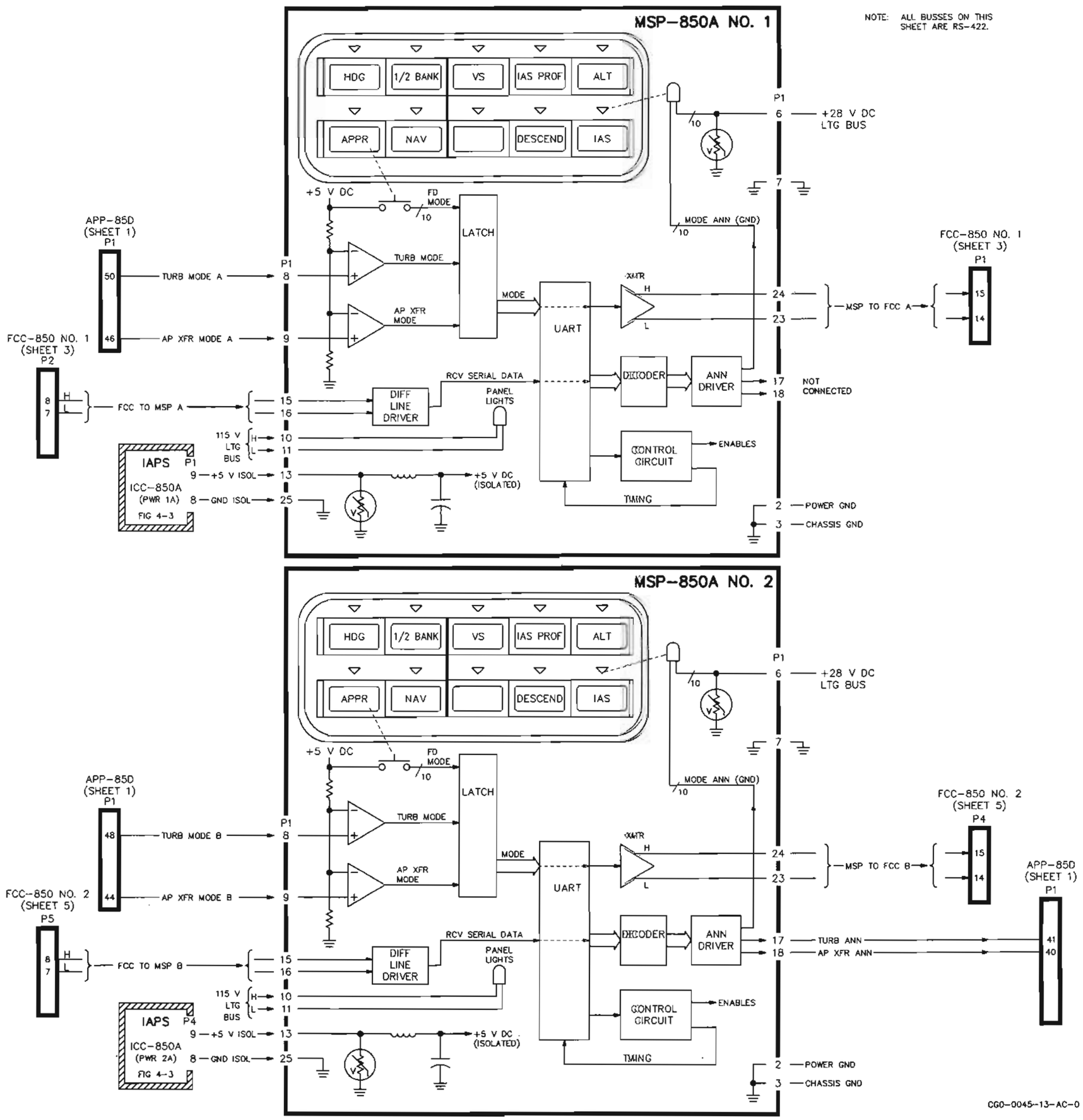

FCS System Schematic
Figure 4-6-1 (Sheet 2 of 10)

Refer to figure 4-6-1, sheet 3. This sheet shows the I/O processor and the nonservo portion of the no. 1 FCC-850 flight control computer. Sheet 4 shows the servo amplifier and the main processor circuits. Note that the FCC is located physically in the IAPS card cage. ICC-850A (IAPS card cage) pin numbers are shown on this figure whenever a function can be accessed on a 50-pin breakout box. Other connections are internal to the IAPS.

The 8-bit I/O processor controls the data handling of the RS-422, ARINC 429, analog data, and discrete data interfaces. This processor also reads PROM data, shares information with the main processor (through the DMA RAM), applies trim relay control, generates trim annunciator output logic, and provides 65 AP/YD monitor logic. The I/O processor reset pin is controlled by power valid logic from the 1A PWR in the IAPS; the processor automatically reinitializes if the FCC input power (+28/+5/±12 V dc from 1A PWR) varies from preset tolerances.

RS-422 input and output data is handled by a dual ACIA. The no. 1 MSP supplies MSP/APP mode request data on the MSP TO FCC A data bus input. This input is applied through a receiver to the no. 1 ACIA receive port. The right FCC supplies cross-side data on the X CHAN B data bus input. This input is applied through a receiver to the no. 2 ACIA receive port. The RS-422 received data is encoded onto the data bus for use by the processors.

When the ACIA transmit mode is enabled, microprocessor generated data is decoded from the I/O data bus and formatted for serial transmission. The ACIA applies MSP mode acknowledge output data from its no. 1 transmit port. This serial output is applied through a transmitter as the FCC TO MSP A data bus output to the no. 1 MSP. The ACIA applies serial cross-side output data from its no. 2 transmit port. This output is applied through a transmitter as the X CHAN A data bus output to the right FCC.

ARINC 429 high-speed data is received from the AHS system and from both of the left side concentrators in the IAPS system. The L-AHC-1 bus supplies aircraft attitude and heading information to the microprocessors through a receiver/decoder circuit. The LA-IOC-3 bus supplies air data and FMS parameters from the 1A IAPS concentrator. The LB-IOC-3 bus supplies redundant data from the other left IAPS concentrator. Both IOC input buses are processed through a receiver/decoder and read on the I/O data bus by the processors.

The FCC generates an ARINC 429 high-speed data bus output which is applied to both left side IAPS concentrators. Microprocessor generated flight director data is encoded from the I/O data bus to serial format and applied to an ARINC transmitter. This output is transmitted as the L-FCC-1 data bus to both the 1A and the 1B input/output concentrators in the IAPS. This output provides flight director mode and steering data for display on the IDS instruments.

Discrete data input consists of configuration and option data from the IAPS system, as well as a variety of inputs from non-IAPS sources. Configuration data is set by straps in the IAPS and read by the I/O processor through an inverting buffer. Option data also is set by straps in the IAPS and read by the I/O processor through a multiplexer. The non-IAPS discrete data input is applied through a multiplexer network to the I/O processor.

The multiplexer network makes the following discrete data available to the I/O processor.

- AP DISC A logic from the A sections of both aircraft switches. When either switch is pressed or a yaw trim failure is detected, +28 V dc is removed and the autopilot disconnects.
- GO AROUND A logic from the A sections of both aircraft switches. When either switch is pressed, +28 V dc is applied to select go-around mode.
- SYNC A logic from the pilot aircraft switch. When the switch is pressed, +28 V dc is applied to change mode references to current flight values.
- AP MON and YD MON logic from both FCC microprocessors. This logic becomes invalid if internal monitors detect a failure.
- TRIM FB from the pitch trim driver circuit. This input allows the processor to monitor the trim arm and trim command outputs.
- SVO MON logic from the servo-monitor circuit. This monitor becomes invalid if a failure occurs in the servo-amplifier circuits.
- SVO CMD A from the d/a converter. This input allows the processor to monitor the three computed A channel servo-command analogs.
- SVO ERROR A from the summing amplifiers. This input allows the processor to monitor the three servo-correction analogs.
- SVO MOTOR B from the cross-side servo amplifiers. This input allows the processor to monitor the three servo-drive analogs from the other FCC.

- AP ENG LEVER UP A logic from the APP. When the AP engage lever is raised, +28 V dc is applied to request autopilot engage.
- YD ENG LEVER UP A logic from the APP. When the YD engage lever is raised, +28 V dc is applied to request yaw damper engage.
- PITCH KNOB H/L analog from the APP. This input applies pitch axis commands to the autopilot.
- ROLL KNOB H/L analog from the APP. This input applies roll axis commands to the autopilot.
- TRIM RATE A analog from the pitch trim system. This input allows the processor to monitor the trim servo-motor speed and direction of rotation.

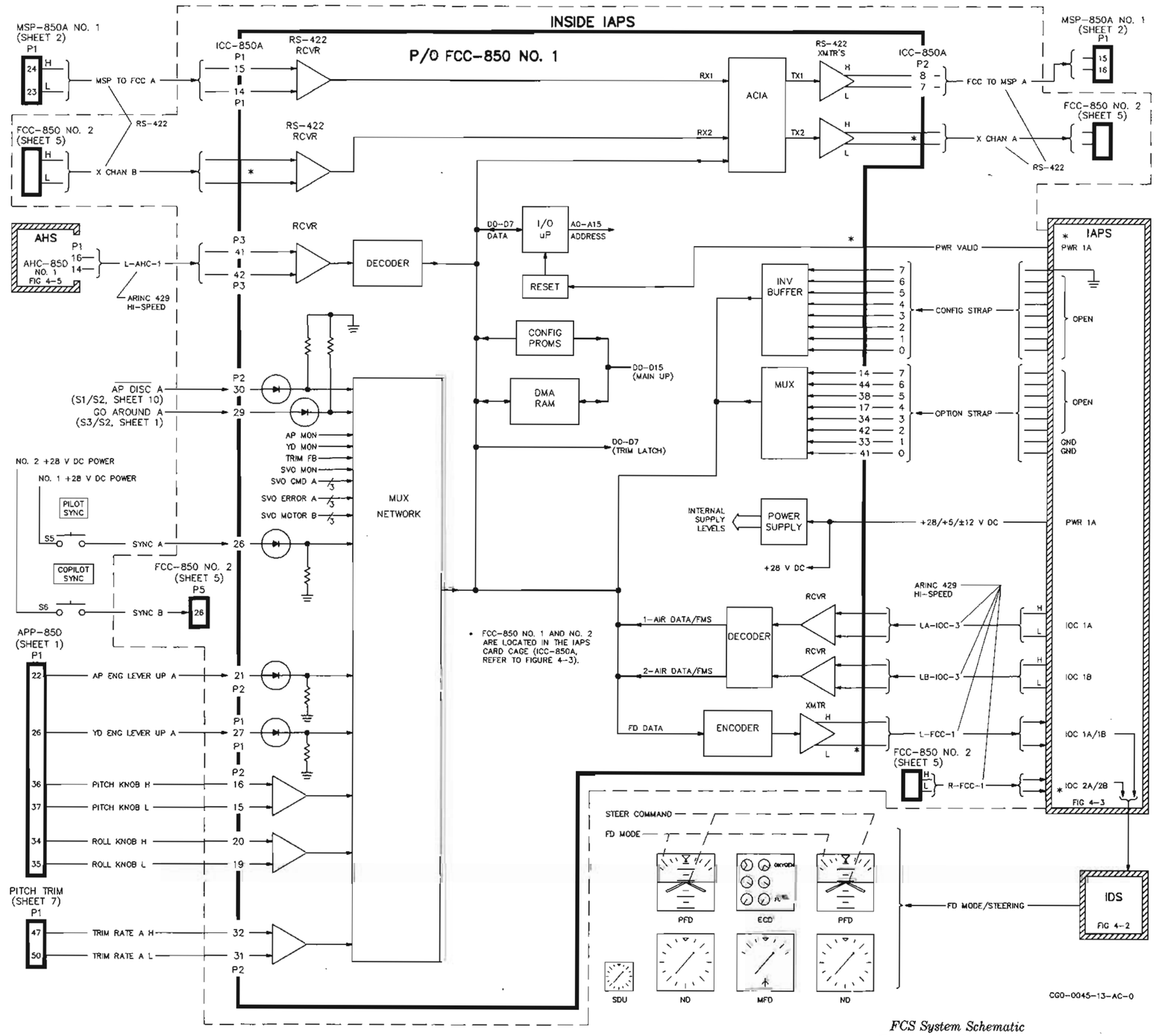

FCS System Schematic
Figure 4-6-1 (Sheet 3 of 10)

Refer to figure 4-6-1, sheet 4. This sheet shows the main processor and servo-amplifier portion of the no. 1 FCC-850 flight control computer and the three SVO-85( ) primary servos. Sheet 3 shows the I/O circuits.

The 16-bit main processor performs the FCC computation functions and generates the channel A elevator, aileron, and rudder servo commands. This processor also reads PROM data, shares information with the I/O processor through the DMA RAM, and applies trim output signals.

Computed servo commands are applied through a digital-to-analog converter to the three servo-amplifier circuits. The enabled servo amplifier processes this command and applies drive to one of the servo-motor terminals. The B channel of the servo amplifier (FCC no. 2) operates in exactly the same way, but generates a servo-motor command that is equal in value but opposite in polarity to the channel A command. The voltage differential at the two motor terminals is what ultimately causes the motor to run.

The analog elevator servo command is applied to an inverting input of the summing amplifier. The SVO RATE A analog feedback from the rate generator in the elevator servo is applied to a noninverting input of the summing amplifier. This SVO RATE A analog is integrated to derive a servo-position reference, which is applied to an inverting input of the summing amplifier. The result of this summing operation represents the channel A servo-error correction required to properly position the elevator servo; when the servo moves the aircraft elevators to the angular position specified by the computed servo command, the summing amplifier zeros and the servo nulls. This SVO ERROR A voltage is applied to the servo monitors and to midvalue voter circuits in both FCC computers.

The midvalue voter circuit compares the SVO ERROR A voltage, the SVO ERROR B voltage (from the other FCC), and ground. The middle voltage level is passed through the voter to the torque limiter. The voter is a safety device which prevents faults from causing servo rotation.

The torque limiter functions with the torque rate limiter to generate and apply programmed torque command voltage to the power amplifier. The torque limiter limits the peak command voltage; the torque rate limiter integrates the voltage input to cause it to build at a precisely controlled rate. The resulting programmed torque command voltage is power amplified and applied as the SVO MOTOR A voltage to pin A of the elevator servo. A servo-bias connection ensures that any amplifier offset is the same offset existing on the channel B elevator power amplifier. The SVO MOTOR A voltage also is applied to the servo-monitor circuits and to the cross-channel FCC.

The power amplifier converts the torque command voltage input to a current output to drive the servo motor. When no input is applied to the amplifier, the output is biased at approximately +14 V dc (half the +28-V dc bus voltage). Since both motor terminals are at +14 V dc, there is no motor current. When a nonzero torque command voltage is applied, the power amplifier converts this voltage to a specific servo-motor drive current. Because the B channel servo command is of the opposite polarity, one power amplifier sources current and the other sinks current. The resulting current flow causes the motor to run in the corresponding direction until the servo-rate feedback equals the computed servo command (plus position), and the amplifier nulls.

The SVO-85C elevator servo and the SMT-85C servo mount function as a precise drive mechanism to control the displacement of the aircraft primary elevator control surfaces. The SVO consists of a permanent magnet dc motor, a dual rate generator, an electromechanical engage clutch, and a precision multistage gear train. The servo mount consists of an override safety slip clutch and a capstan which connects the servo to the aircraft control surface.

Servo-motor drive is applied from both channels of the servo amplifier as previously described. Channel A motor drive is provided by the left FCC, and channel B motor drive is provided by the right FCC. The differential across the motor leads command servo motion to correct the aircraft attitude.

When the motor runs, the dual rate generator also runs a corresponding amount. This generator provides two individual feedback outputs to the FCC servo-amplifier circuits. The SVO RATE A output is applied to a summing amplifier in the left FCC; the SVO RATE B output is applied to a summing amplifier in the right FCC.

When the autopilot is engaged, +28-V dc engage clutch power is applied from the APP to energize the SVO clutch coil. When this coil is energized, the clutch couples the motor torque through the precision gear train to turn the capstan. The capstan

mechanically moves the linkage connected to the aircraft control surface.

The aileron and the rudder servo-amplifier circuits are identical to those described for the elevator amplifier. The main microprocessor generates aileron and rudder servo commands and applies them to the proper summing amplifier. These circuits apply channel A motor drive to the aileron and the rudder servos respectively.

The aileron SVO-85A servo and its associated SMT-85A mount control the displacement of the aircraft primary aileron control surfaces. The rudder SVO-85B servo and its associated SMT-85B mount control the displacement of the aircraft primary rudder control surfaces. The aileron and rudder servo-motor voltages are monitored by the ATC-81 and used to generate trim signals.

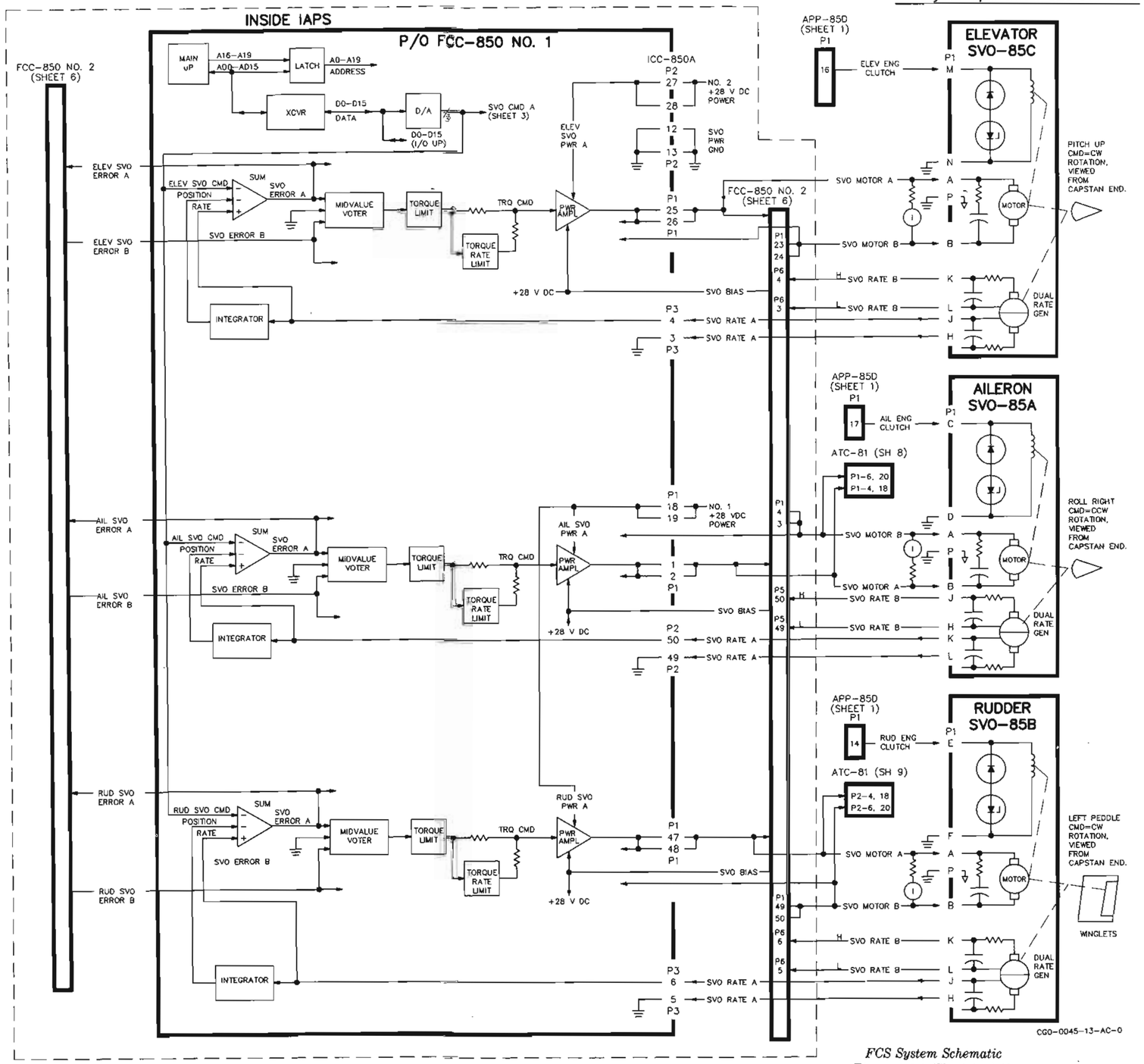

FCS System Schematic
Figure 4-6-1 (Sheet 4 of 10)

Refer to figure 4-6-1, sheet 5. This sheet shows the I/O processor and the nonservo portion of the no. 2 FCC-850 flight control computer. Sheet 6 shows the servo amplifier and the main processor circuits. Note that the FCC is located physically in the IAPS card cage. ICC-850A (IAPS card cage) pin numbers are shown on this figure whenever a function can be accessed on a 50-pin breakout box. Other connections are internal to the IAPS.

Internal FCC operation is described on a previous page.

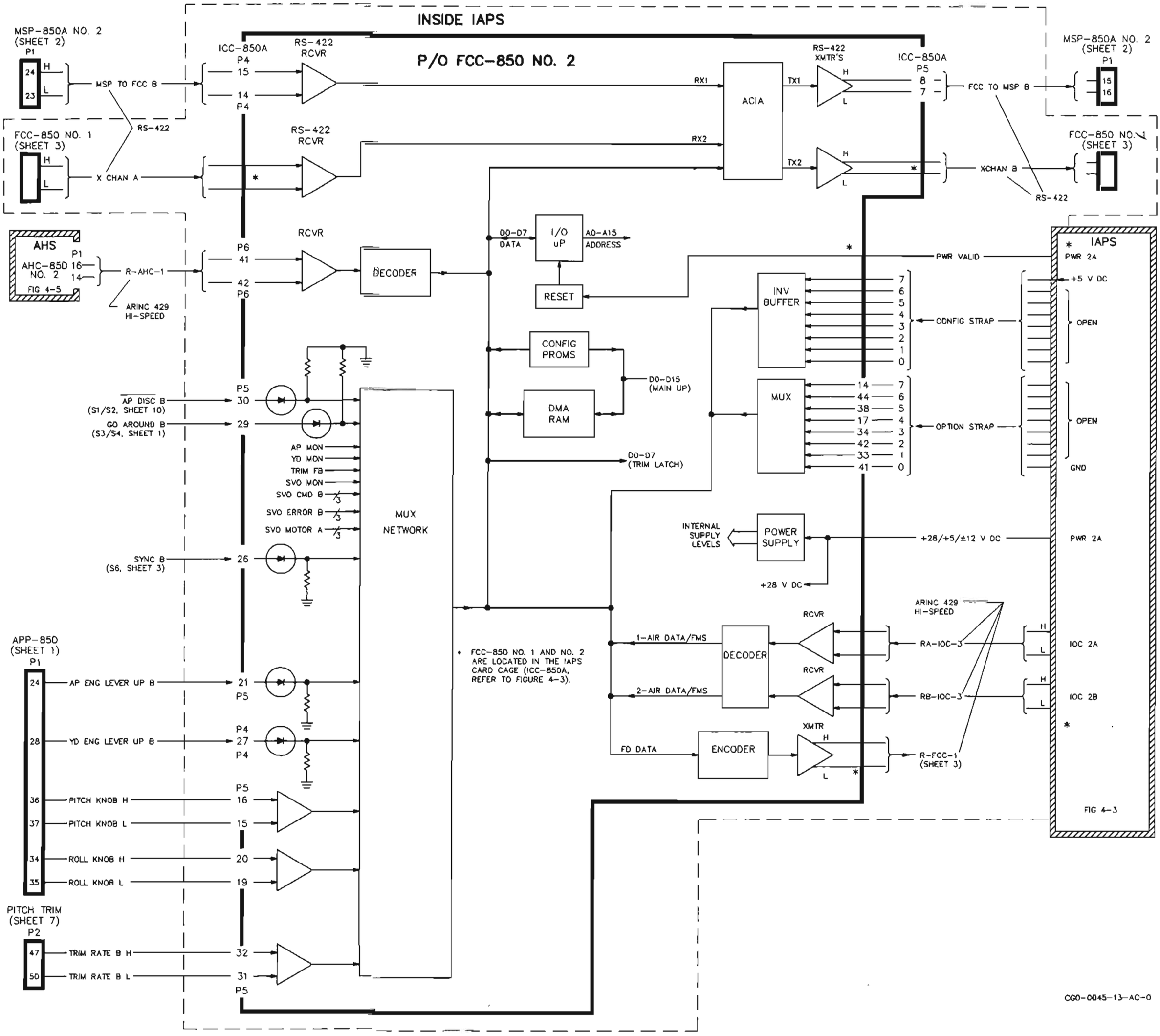

FCS System Schematic
Figure 4-6-1 (Sheet 5 of 10)

Refer to figure 4-6-1, sheet 6. This sheet shows the main processor and servo-amplifier portion of the no. 2 FCC-850 flight control computer. Sheet 5 shows the I/O circuits.

Internal FCC operation is described on a previous page.

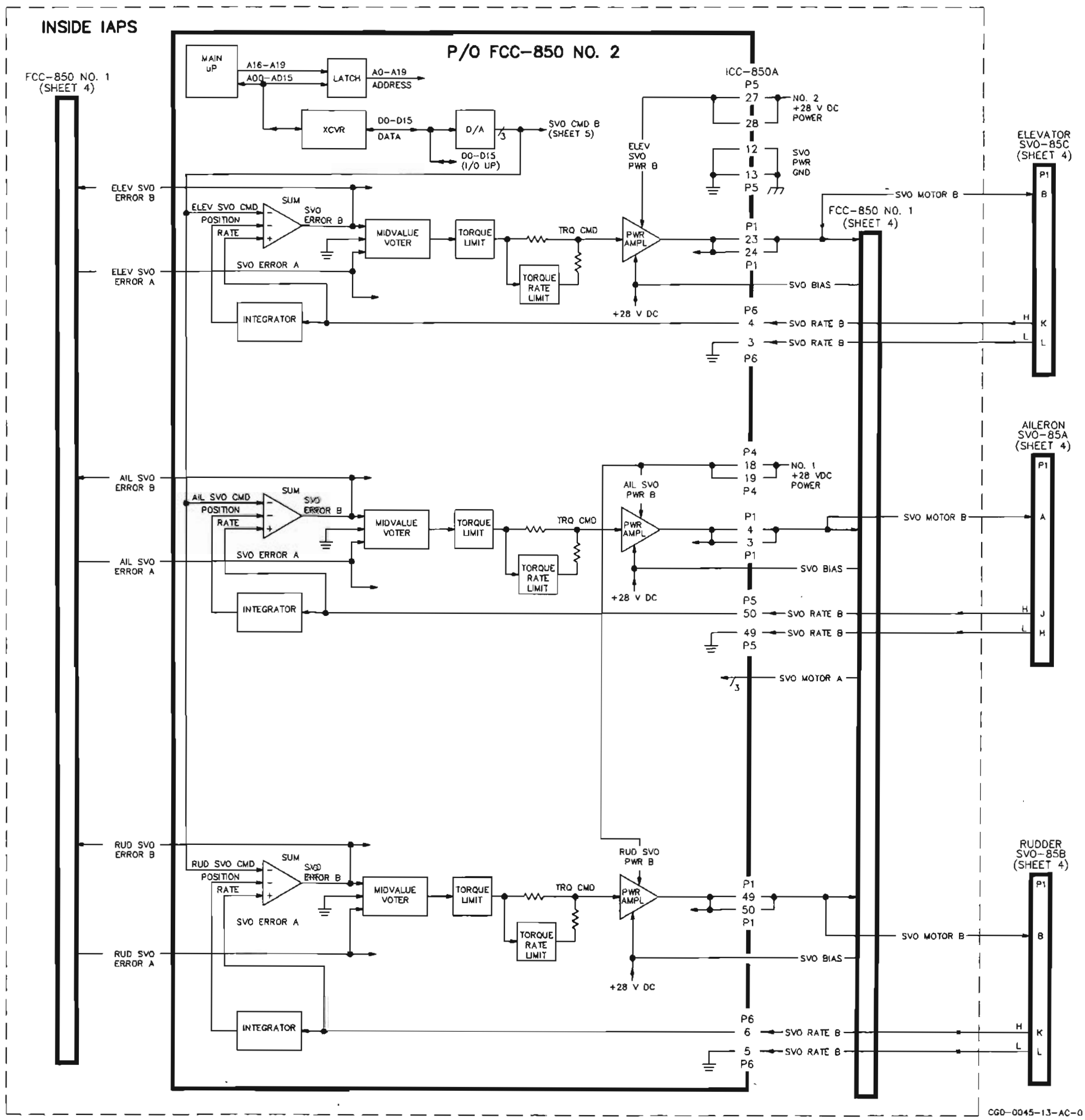

FCS System Schematic
Figure 4-6-1 (Sheet 6 of 10)

Refer to figure 4-6-1, sheet 7. This sheet shows both FCC-850 servo-monitor, interlock monitor, and pitch trim circuits.

Each of the FCC computers contains a monitor circuit that checks the validity of various functions in the servo-amplifier circuits. The elevator SVO ERROR A and SVO ERROR B voltages are compared, to check that they are approximately equal to each other and of opposite polarity. The elevator SVO MOTOR A and SVO MOTOR B voltages are added together and compared with the elevator servo power level; this comparison checks that the two motor voltages vary from the null level (+14 V dc) by an equal and opposite amount (ie, +15 V dc and +13 V dc). If the error check and the torque (motor) check are both within acceptable tolerances, the elevator SVO MON logic is valid. Identical monitor checks are performed on the aileron and the rudder servo voltages.

The FCC monitor circuit also performs combinational logic checks to generate the monitor interlocks which enable the APP engage relays. These monitors consist of servo (feedback and torque) and processor (I/O and main) components. The elevator SVO MON, aileron SVO MON, 65 AP MON (I/O processor internal monitor), and 86 AP MON (main processor internal monitor) conditions must all be valid to apply a valid +28-V dc AP MON INTLK output to the AP engage circuit in the autopilot panel. The rudder SVO MON, 65 YD MON (I/O processor internal monitor), and 86 YD MON (main processor internal monitor) conditions must all be valid to apply a valid +28-V dc YD MON INTLK output to the YD engage circuit in the autopilot panel.

Both FCC computers function together to apply pitch trim control through the Beech trim interface to the aircraft trim system. Each FCC contains two decoding latches, a trim relay, trim arm circuits, and trim command circuits.

The left FCC generates channel A pitch trim control. A latch circuit decodes trim fail logic and trim relay enable logic from the D0-D7 I/O processor bus. If a failure is detected by the processor, trim fail logic switches a transistor to apply a TRIM FAIL ANN A ground output to the trim interface. Decoded trim relay enable logic energizes a 2-pole trim relay. When energized, this relay passes no. 1 +28-V dc trim power to the arm/command circuits and passes the B channel XSD ARM B OUT voltage to the trim system. This relay functions as the channel A interlock to the cross-side generated TRIM ARM DN B output.

A second latch in the left FCC decodes trim arm enable and trim command enable logic from the D0-D15 main processor bus. The decoded trim arm enable activates the trim arm circuits. No. 1 trim power from the energized trim relay is output as the XSD ARM A OUT voltage to the channel B trim relay. The decoded trim command enable activates the trim command circuits. No. 1 trim power from the energized trim relay is chopped at a 1-Hz rate. The resulting variable duty cycle (+28 V dc/open pulses) TRIM CMD DN A output is applied to the trim system. The arm and command trim outputs are monitored by the I/O processor.

The right FCC provides the channel B pitch trim control. A latch circuit decodes trim fail logic and trim relay enable logic from the I/O processor bus. If a failure is detected by the processor, trim fail logic switches a transistor to apply a TRIM FAIL ANN B ground output to the trim interface. Decoded trim relay enable logic energizes a 2-pole trim relay. When energized, this relay passes no. 2 +28-V dc trim power to the arm/command circuits and passes the A channel XSD ARM A OUT voltage to the trim system. The relay functions as the channel B interlock to the cross-side generated TRIM ARM UP A output.

A second latch in the right FCC decodes trim arm enable and trim command enable logic from the main processor bus. The decoded trim arm enable activates the trim arm circuits. No. 2 trim power from the energized trim relay is output as the XSD ARM B OUT voltage to the channel A trim relay. The decoded trim command enable activates the trim command circuits. No. 2 trim power from the energized trim relay is chopped at a 1-Hz rate. The resulting variable duty cycle (+28 V dc/open pulses) TRIM CMD UP B output is applied to the trim system. The arm and command outputs are monitored by the I/O processor.

The pitch trim system contains a dual rate generator that returns servo feedback to both FCC computers. The TRIM RATE A analog is applied to the I/O processor in the left FCC. The TRIM RATE B analog is applied to the I/O processor in the right FCC.

The ADS system applies IAS trip logic to the pitch trim system. A REF V voltage provides a reference level to relays in the air data system. When air data is valid and the IAS is less than 150 knots, a relay actuates and returns the reference on the 150 KT TRIP output to the trim system. When air data is valid and the IAS is less than 200 knots, another relay actuates and returns the reference on the 200 KT TRIP output to the trim system.

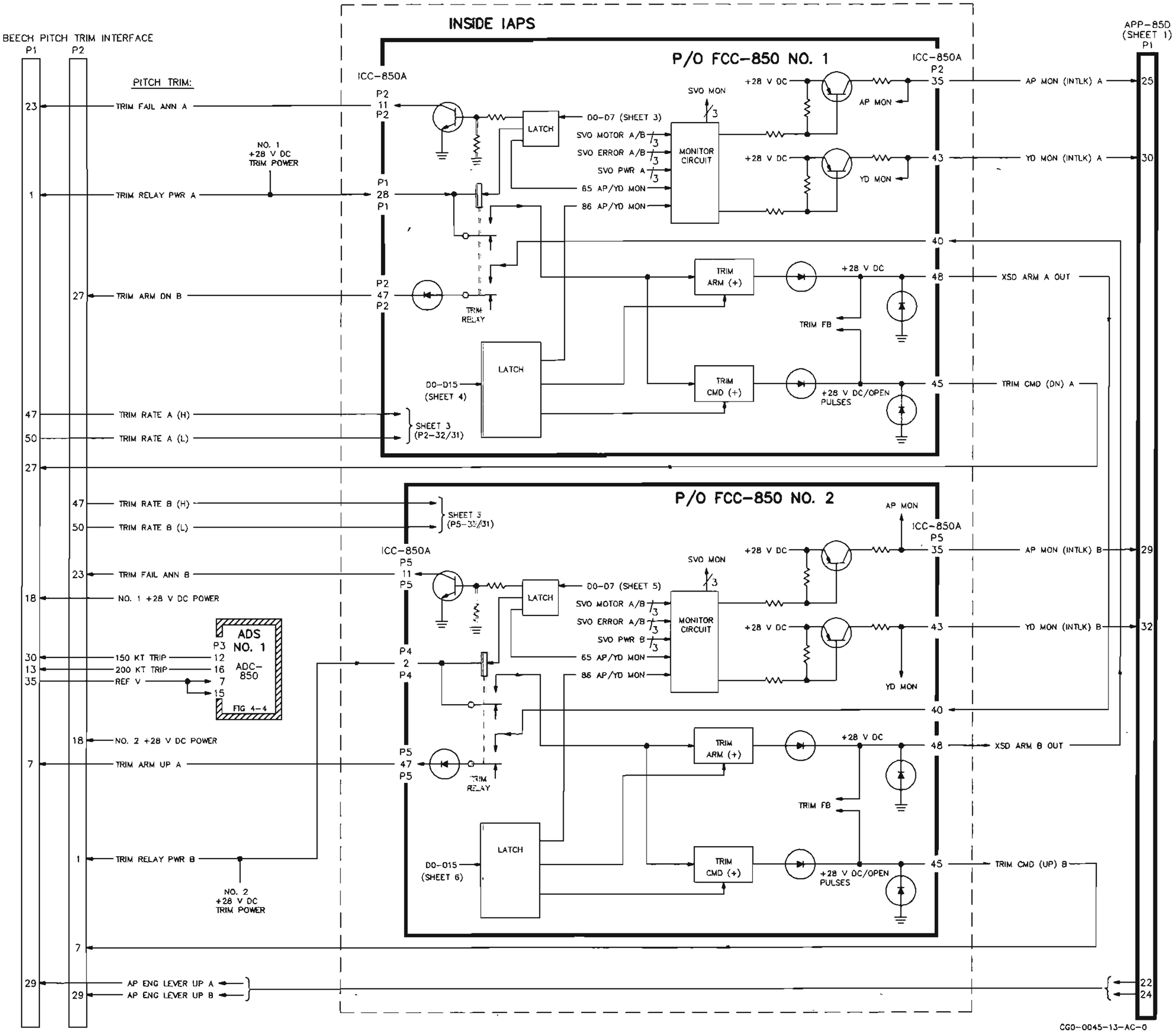

FCS System Schematic
Figure 4-6-1 (Sheet 7 of 10)

Refer to figure 4-6-1, sheet 8. The ATC-81 automatic trim coupler is a 2-channel unit that generates roll and yaw trim servo outputs. This sheet shows the roll channel circuits; sheet 9 shows the yaw channel circuits. Operation of the two channels is identical.

The ATC roll channel provides trim commands to the (Beech supplied) roll trim system to null aerodynamic forces that the aileron primary servo is required to hold. The roll channel is powered by no. 1 +28-V dc input power and by no. 2 +28-V dc power (applied through the yaw channel). Both power inputs must be present, or the A and B power supplies shut down and disable the ATC.

The roll channel contains two force sensors, command/arm/high-force level detectors, output drivers, a cutout relay, and internal monitor circuits. Each force sensor independently measures the amount of force on the aileron control surfaces by sensing the aileron primary servo-motor voltage. This voltage is proportional to the amount of applied torque and is used to determine if trim is required. The amplitude and direction of the trim output is derived from this voltage.

The amplified servo-force signal is compared to reference command, arm, and high-force dc levels. If a reference is exceeded, a corresponding voltage is applied to an output driver (or monitor). The command output drivers are powered by the aileron engage clutch voltage to ensure that trim output is removed when the servo is disengaged. The right and left dc command outputs are applied through an energized cutout relay to the Beech roll trim interface. This relay opens to remove the trim command if a failure is detected.

The arm output drivers are powered by the command output drivers to ensure that arm and command voltages are applied simultaneously to the roll trim system. The high-force voltage outputs are applied to the trim fail monitor as a measure of primary servo drive.

Roll trim operation is monitored by a trim fail monitor and an engage inhibit monitor circuit. The trim fail circuit consists of six monitors which check for trim command/arm in both (left and right) directions, wrong left/right trim (system running in wrong direction), no trim (primary servo drive but no trim rate feedback), and trim drive (power) failure. If any monitor detects a fail condition, the cutout relay opens to remove the trim command outputs. Discrete fail annunciator outputs are provided to the trim interface.

The engage inhibit circuit monitors the two roll trim drive levels; this monitor is disabled when the autopilot is engaged (clutch power present). If a trim drive failure is detected, discrete TRIM MON voltage outputs are generated to prevent the autopilot from engaging. The TRIM MON output discretes are ORed with disconnect logic from the pitch trim interface, the roll trim interface, and the stick shakers. This combined logic is applied to monitor inputs on the APP.

ADDENDUM 2

TO

STARSHIP 1 AVIONICS SYSTEM

SYSTEM MANUAL

PART NUMBER 523-0774076, DATED 14 JAN 1989

Insert this addendum sheet facing page 4-119 of the Theory of Operation Section of the manual

Three of the discrete inputs to APP-85D pins P1-19 and P1-15 should be relabeled as follows. Note that the wiring and pin numbers are correct as shown, only the labels are changed.

a. ATC-81 pins P1-11 and P1-23 = "TRIM MON DISC"

b. Beech Pitch Trim Interface pins P1-2 and P2-2 = "MANUAL PITCH TRIM DISC"

c. Beech Roll Trim Interface pins P3-20 and P4-20 = "MANUAL ROLL TRIM DISC"

These three discretes are OR'd with the "STICK SHAKER DISC" discretes and applied to the APP. The two resulting trim disengage outputs to the APP-85D should be labeled "TRIM DISC A" (at P1-19) and "TRIM DISC B" (at P1-15). Note that these are the two stubbed inputs that are added to sheet 1 by this addendum.

Several pin numbers are changed at the Beech Roll Trim Interface. The following table shows correct ATC/roll trim wiring.

ATC-81	TO/FROM	BEECH ROLL TRIM INTERFACE
P1-14	FROM	P3-1
P1-21	FROM	P4-1
P1-9	FROM	P3-41
P1-16	FROM	P4-41
P1-12	TO	P4-31
P1-7	TO	P4-16
P1-24	TO	P3-16
P1-3	TO	P3-31

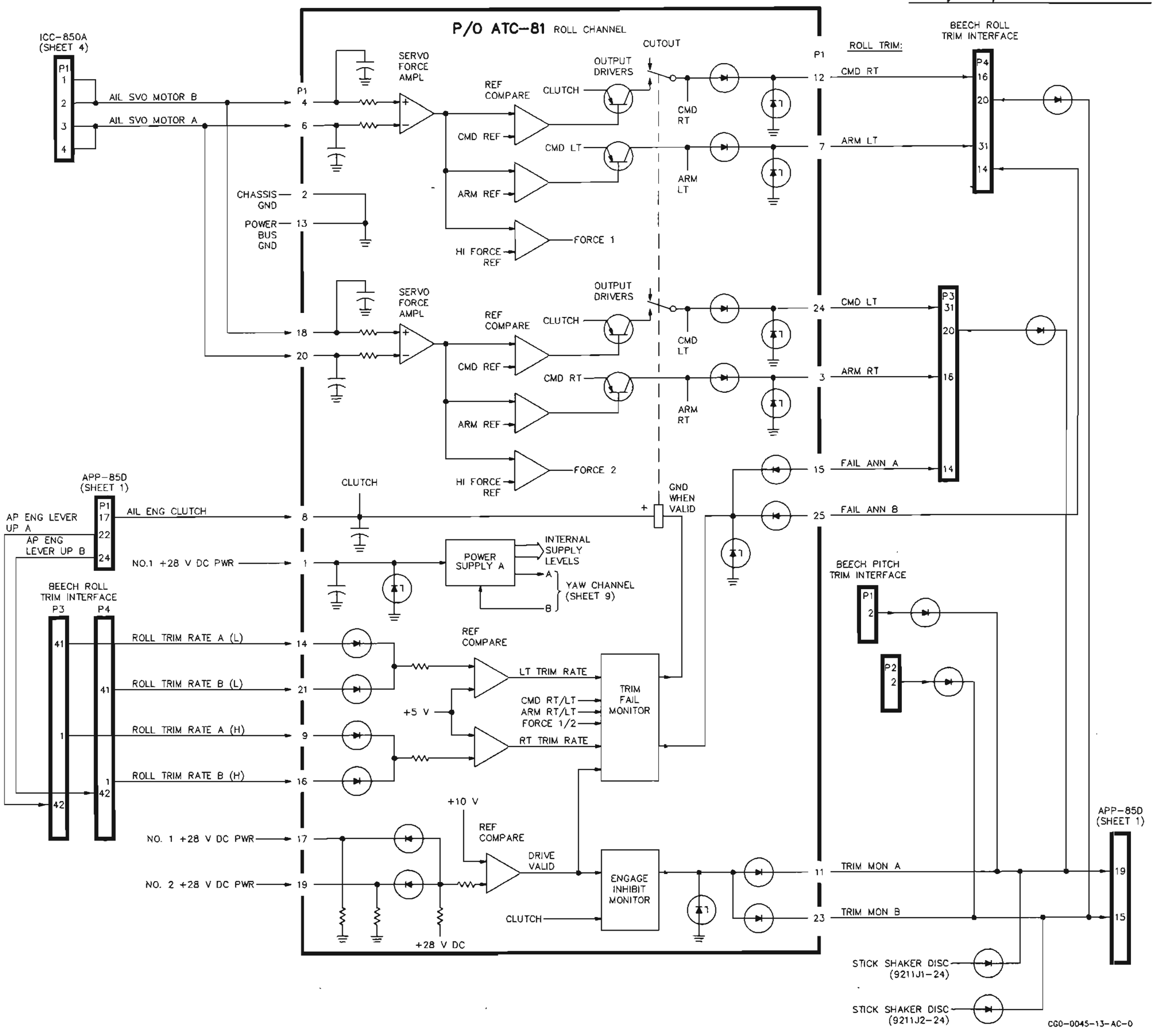

FCS System Schematic
Figure 4-6-1 (Sheet 8 of 10)

Refer to figure 4-6-1, sheet 9. This sheet shows the ATC yaw channel circuits; sheet 8 shows the roll channel circuits.

The ATC yaw channel provides trim commands to the (Beech supplied) yaw trim system to null aerodynamic forces that the rudder primary servo is required to hold. The yaw channel is powered by no. 2 +28-V dc input power and by no. 1 +28-V dc power (applied through the roll channel). Both power inputs must be present, or the A and B power supplies shut down and disable the ATC.

Internal operation of the yaw channel is identical to that described for the roll channel on a previous page.

The YAW TRIM MON output discretes are ORed with disconnect logic from the yaw trim interface and applied to relays shown on sheet 10.

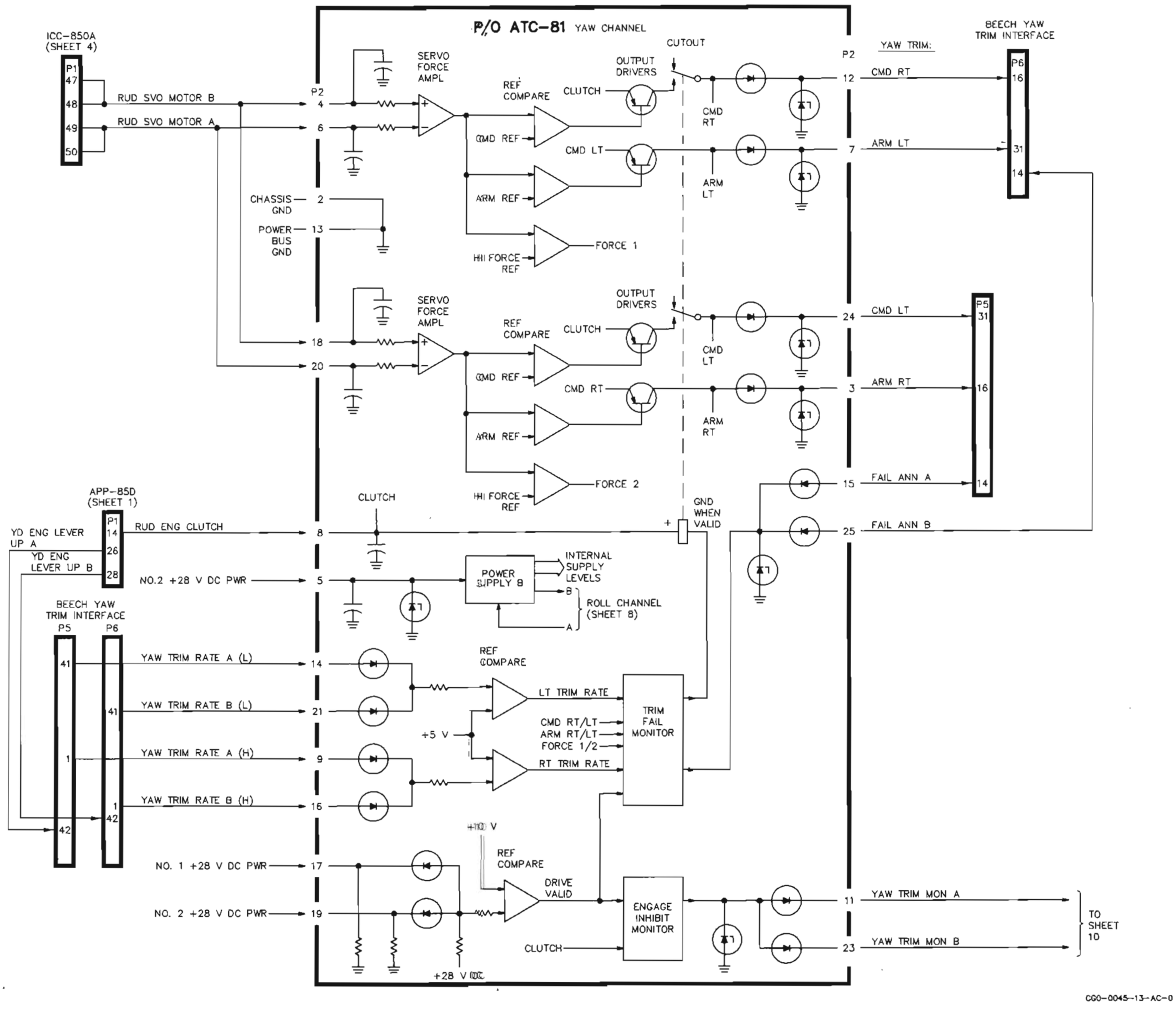

FCS System Schematic
Figure 4-6-1 (Sheet 9 of 10)

Refer to figure 4-6-1, sheet 10. This sheet shows the autopilot disconnect switch wiring and the trim switch wiring.

The AP DISC buttons are located on the control wheels. Disconnect logic is applied through yaw trim relays to APP and FCC monitor inputs. These inputs disengage the autopilot when either button is pressed or when a yaw trim failure is detected.

The pitch/roll manual trim switches are located on the control wheels. These switches apply an enable and up/down or left/right directional trim commands to the Beech trim interface. When the button is pushed, +28-V dc power is switched to the appropriate enable pins. Then when the switch is moved, +28 V dc is switched to the appropriate command pins.

The yaw manual trim switch is located on the pedestal. This switch applies left/right directional trim commands to the Beech trim interface. When this switch is turned, voltage is passed through the switch contacts to the appropriate command pins and to a discrete DAU input pin.

ADDENDUM 2

TO

STARSHIP 1 AVIONICS SYSTEM

SYSTEM MANUAL

PART NUMBER 523-0774076, DATED 14 JAN 1989

Insert this addendum sheet facing page 4-123 of the Theory of Operation Section of the manual

The center terminals of the yaw trim switch should connect only to +28-V dc.

Beech Yaw Trim Interface pins P5-17 and P6-17 should connect only to +28-V dc.

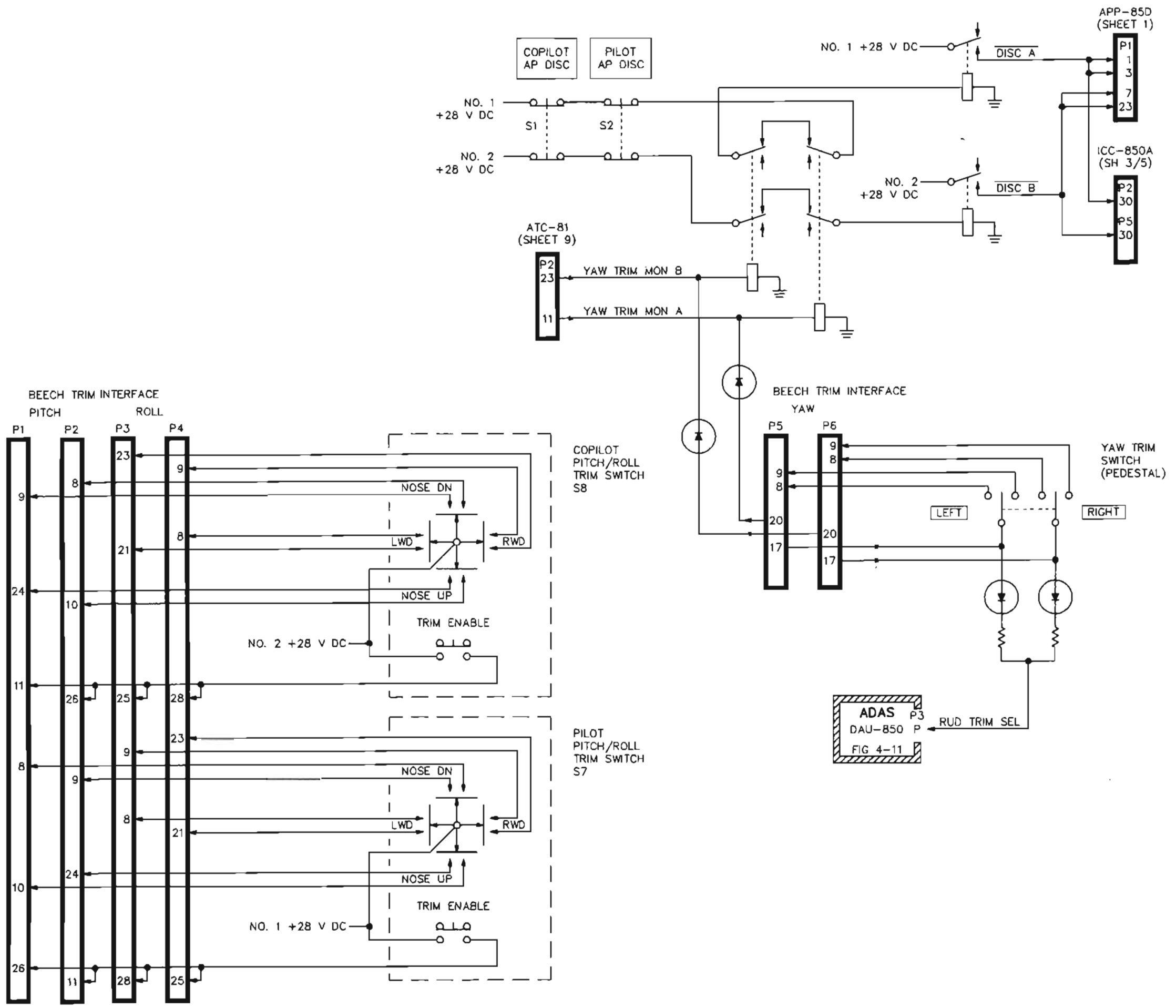

FCS System Schematic
Figure 4-6-1 (Sheet 10 of 10)

This page intentionally left blank.

4.3.6 FMS (Flight Management System)

4.3.6.1 Overview

The FMS system provides aircraft flight management functions. The FMS contains two control display units, two altitude awareness panels, a course heading panel, a flight management computer (consists of two LRU's), a data base unit, and a copilot CDU coupler. The FMS is a single (not dual) system that uses two CDU controllers. Refer to figure 4-7. Each LRU is described below:

CDU-850A No. 1 Control Display Unit
CDU-850A No. 2 Control Display Unit
AAP-850 No. 1 Altitude Awareness Panel
AAP-850 No. 2 Altitude Awareness Panel
CHP-850 Course/Heading Panel
FMC-851A Flight Management Computer
FMC-852A Navigation Computer
DBU-850 Data Base Unit
CDC-850A Control Display Coupler

The no. 1 CDU-850A is located on the pilot side of the instrument panel. The CDU contains a color crt display and a tilted keyboard assembly. This unit provides primary mode selection for the onside PFD/ND, weather radar, and the flight management functions. The CDU also provides a secondary method of entering radio frequencies and codes (applied to the onside RTU). Mode selection and PFD/ND/WXR control data are applied from the CDU through the FMC-851A to the IAPS input/output concentrators. A reversionary switch disables the CDU when set to the X-SIDE position.

The no. 2 CDU-850A is located on the copilot side of the instrument panel and provides mode selection for the right side PFD/ND, weather radar, and flight management functions. Note that this CDU allows the copilot to conveniently and independently control WXR/FMS functions, even though the WXR and FMS are not dual systems. Mode selection and PFD/ND/WXR control data are applied through the CDC-850A to the IAPS input/output concentrators. A reversionary switch disables the CDU when set to the X-SIDE position.

The no. 1 AAP-850 is located on the pilot side of the instrument panel and provides the altitude control functions. The AAP is used to select decision height altitude, reporting altitude, and minimum decision altitude. This data is applied through the left CDU to the FMC-851A (in the IAPS). The AAP also contains an RA TEST button which applies a discrete output (to the RAC-870) to initiate self-test mode in the ALT-55B radio altimeter.

The no. 2 AAP-850 is located on the copilot side of the instrument panel. Altitude control data is applied through the right CDU to the CDC-850A (in the IAPS). An RA TEST button applies a discrete output (to the RAC-870) to initiate self-test mode in the ALT-55B.

The CHP-850 is located below the MFD on the instrument panel. The CHP provides course selection, heading selection, and joystick control outputs. Two course knobs allow independent courses to be selected through the CDU's. A single, ganged heading knob provides selected heading outputs to both of the CDU's. The joystick controls cursor position on the MFD display.

The FMC-851A and the FMC-852A computers are located in the IAPS card cage and function together as one aircraft flight management computer. This integrated computer communicates with the left CDU, the CDC-850A cross-side coupler, the IAPS system, the MFD display, and the DBU-850 disk drive. The FMC-851A receives CDU keyboard and AAP/CHP control words on the L-CDU-1 bus; processed page data is then returned to the left CDU on the L-FMS-3 bus. Cross-channel data is exchanged with the CDC-850A on the L-FMS-4 and R-FMS-4 buses.

All four input/output concentrators in the IAPS system supply data to the FMC-851A and the CDC-850A on the IOC-4 buses; these four buses provide a redundant set of parameters required by the FMS system and the diagnostic system.

The FMC-851A generates PFD/ND display format commands and applies this information (on the L-FMS-1 data bus) through the IAPS concentrators to the displays. The FMC-851A also generates geographic map data and FMS page/diagnostic data and applies this information to the MFD display (on the L-FMS-2 data bus) when requested.

The DBU-850 is a 3½-inch disk drive which is used to load data base updates/checklists into the FMS or to download aircraft diagnostic data onto a disk. The FMC-852A controls the disk drive interface.

The CDC-850A CDU coupler is located in the IAPS card cage. This LRU processes keyboard and AAP/CHP data from the right CDU and returns page

formatted display data to the CDU just like the FMC-851A. However, the CDC does not contain flight management processing circuits. Communication with the cross-side FMC circuits and the IAPS system is as described for the FMC-851A.

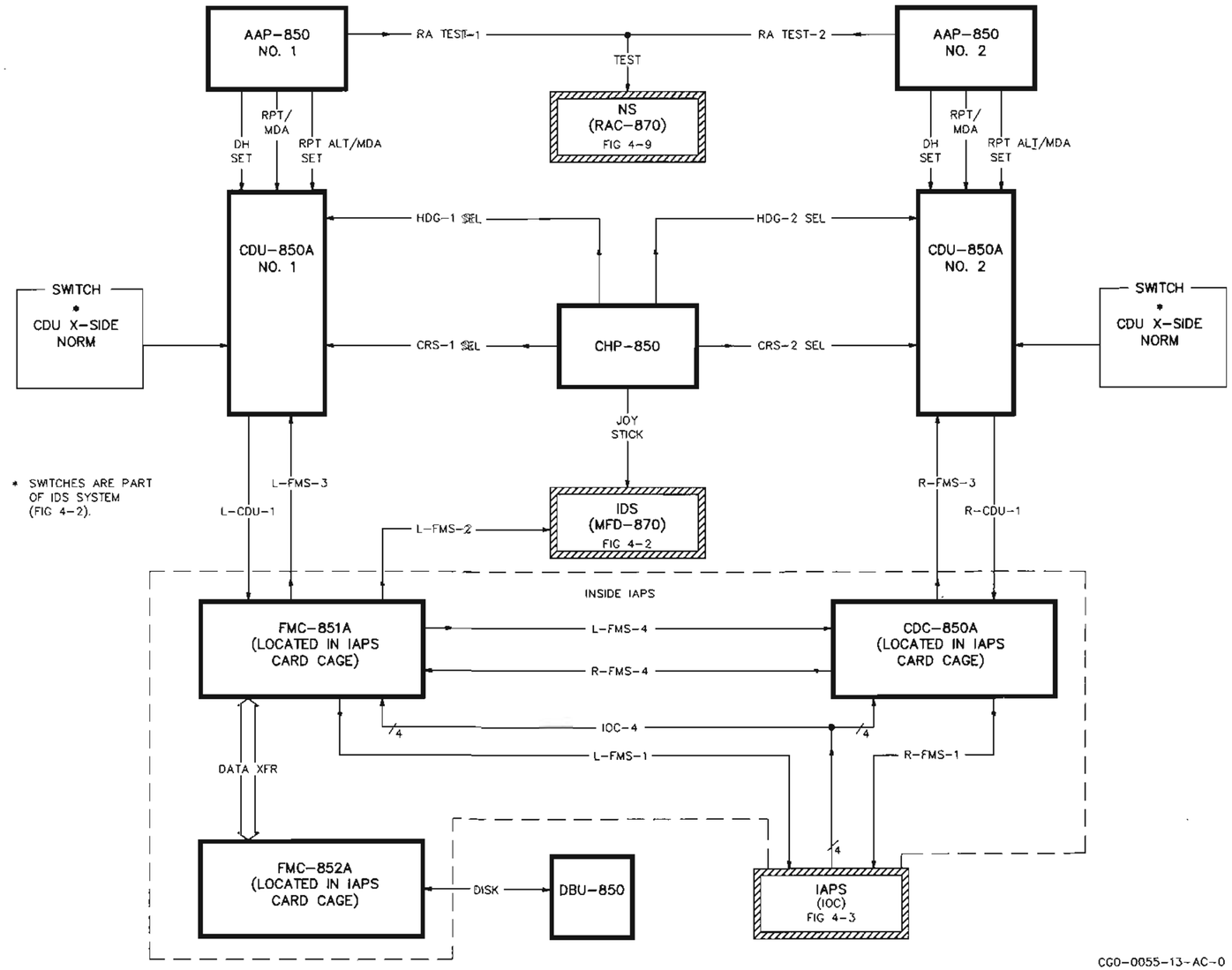

FMS (Flight Management System) Overview
Figure 4-7

4.3.6.2 System Schematic

The FMS is a dual CDU, single flight management system. Refer to figure 4-7-1, sheet 1. This sheet shows both AAP-850 altitude awareness panels.

Each AAP contains knobs and switches that allow the operator to select altitude related parameters. The no. 1 AAP inputs commands to the pilot side CDU (and then into the FMC-851A). The no. 2 AAP inputs commands to the copilot side CDU (and then into the CDC-850A). AAP controls include a decision height (DH) knob and SET switch, an RA TEST button, an RPT/MDA function selector, and a reporting altitude (or minimum decision altitude) knob and SET switch. The following paragraphs apply to both AAP panels.

The DH knob and SET switch is a rotary knob and pushbutton switch assembly which selects the onside decision height value. Press the SET switch to apply a momentary ground DH SET ON/OFF discrete to the CDU. This discrete is transmitted through the CDU to the FMC-851A or CDC-850A and selects or deselects the PFD decision height display. When decision height is displayed, rotate the DH knob to apply DH SET A/B logic to change the value displayed on the PFD. The DH SET A/B outputs consist of 0.5- or 5.0-V dc discrete levels set by a rotary 3-state logic generator. One of the following voltage states is sequentially generated at the SET A/B outputs as the knob is turned.

SET A	SET B
0.5 V	0.5 V
5.0 V	0.5 V
0.5 V	5.0 V

The RA TEST button is a momentary switch used to select radio altimeter self-test mode. When this button is pressed (on either of the AAP panels), a discrete ground is applied to the RAC in the navigation system. The RAC then initiates the ALT self-test mode.

The RPT/MDA toggle switch selects the function of the rotary knob/pushbutton switch assembly located at the right end of the panel. When this switch is set to RPT, the adjacent knob sets the reporting altitude value. When set to MDA, the knob sets the minimum decision altitude value.

The knob on the right portion of the panel is a rotary knob and pushbutton switch assembly, similar to the DH knob/switch assembly previously described. This control selects onside reporting altitude or minimum decision height, as determined by the RPT/MDA toggle switch. Press the SET switch to apply a momentary ground discrete to the onside CDU. This discrete selects or deselects the PFD reporting altitude (or minimum decision altitude) display; rotate the knob to apply SET A/B 3-state logic to change the displayed value. The SET A/B voltage outputs are as previously described for the DH knob.

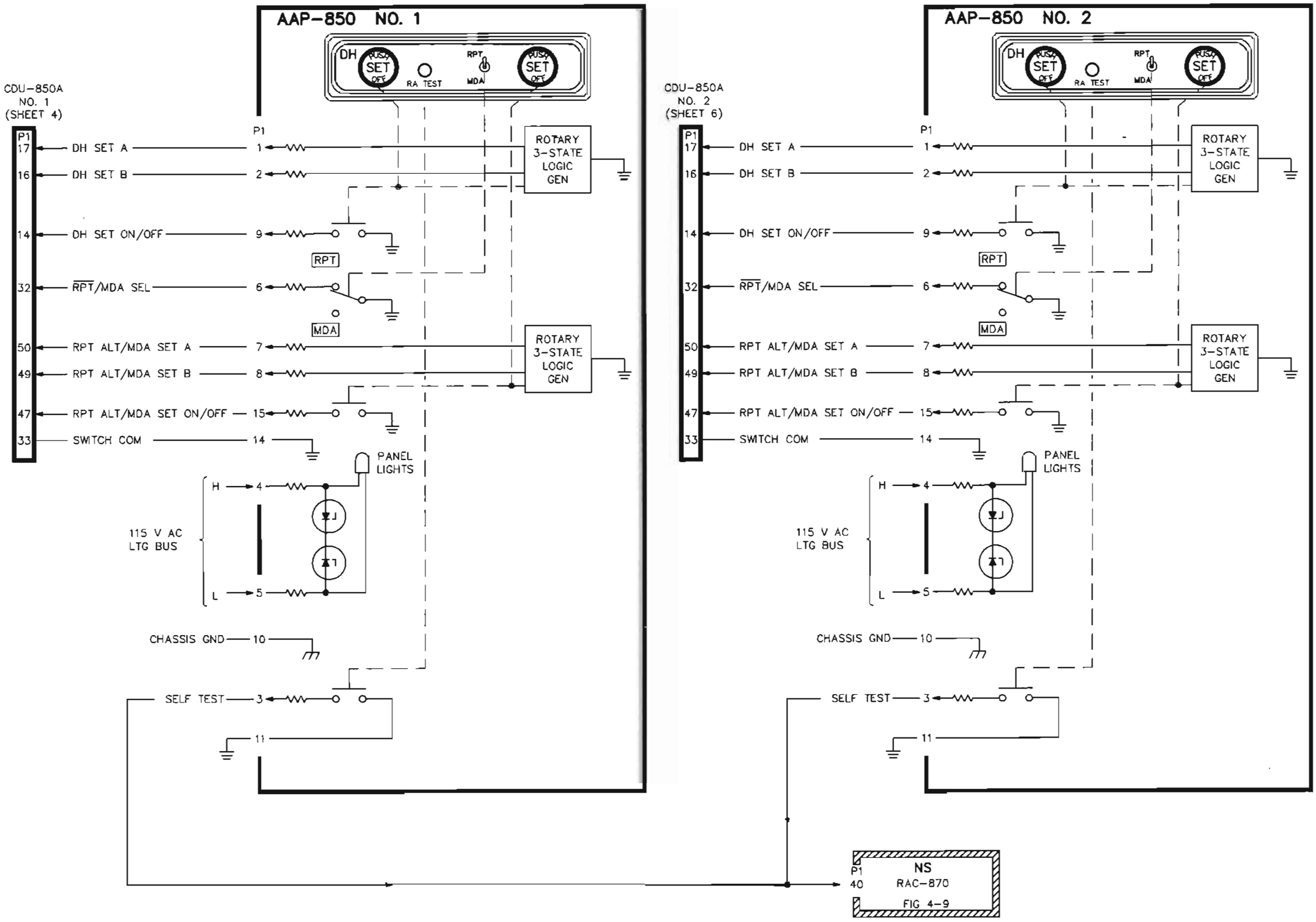

FMS System Schematic
Figure 4-7-1 (Sheet 1 of 9)

Refer to figure 4-7-1, sheet 2. This sheet shows the CHP-850 course/heading panel. The CHP contains a joystick, two course select controls, and a heading select control.

The joystick applies up/left/down/right directional commands to position the cursor on the MFD display. The JS COM center lead of the joystick is connected to a diode isolated ground in the MFD. This reference level is returned directly as the JS UP, JS LT, JS DN, or JS RT cursor command to the MFD.

The CHP provides two identical course knob assemblies. The CRS 1 knob/switch provides course control inputs to the pilot side CDU. The CRS 2 knob/switch provides course control inputs to the copilot side CDU.

The CRS 1 knob/switch is a rotary knob and pushbutton switch assembly. Rotate this knob to change the selected course display on the pilot side ND. When the knob is rotated, CRS-1 SEL A/B logic is applied from the CHP through the left CDU to the FMC-851A. This CRS-1 SEL A/B output consists of 0.5- or 5.0-V dc discrete levels set by a rotary 3-state logic generator. One of the following voltage states is sequentially generated at the SEL A/B outputs as the knob is turned.

SEL A	SEL B
0.5 V	0.5 V
5.0 V	0.5 V
0.5 V	5.0 V

Press the CRS-1 control to apply a momentary ground CRS-1 DIRECT TO discrete to the CDU. This discrete is transmitted through the CDU to the FMC-851A and causes the selected course value to be replaced with the active (and valid) bearing to the station.

The CRS 2 knob/switch operates like the CRS 1 assembly, but applies 3-state CRS-2 SEL A/B logic and a discrete CRS-2 DIRECT TO ground through the right CDU to the CDC-850A. This control changes the selected course display on the copilot side ND.

The HDG knob/switch is a dual-control rotary knob and pushbutton switch assembly. Rotate this knob to change the selected heading value displayed on both ND's. When the knob is rotated, HDG-1 SEL A/B logic and HDG-2 SEL A/B logic are applied through the CDU's to the FMC-851A and the CDC-850A respectively. This HDG SEL A/B logic output is identical to the CRS SEL A/B outputs described above.

Press the HDG control to apply momentary HDG-1 SYNC and HDG-2 SYNC ground discretes through the CDU's to the FMC-851A and the CDC-850A. This action zeros any heading error and makes the selected heading the active heading.

Note that the left and right CDU interfaces are completely separate from each other. Each interface ground is isolated from the other and tied to an internal ground in the appropriate CDU.

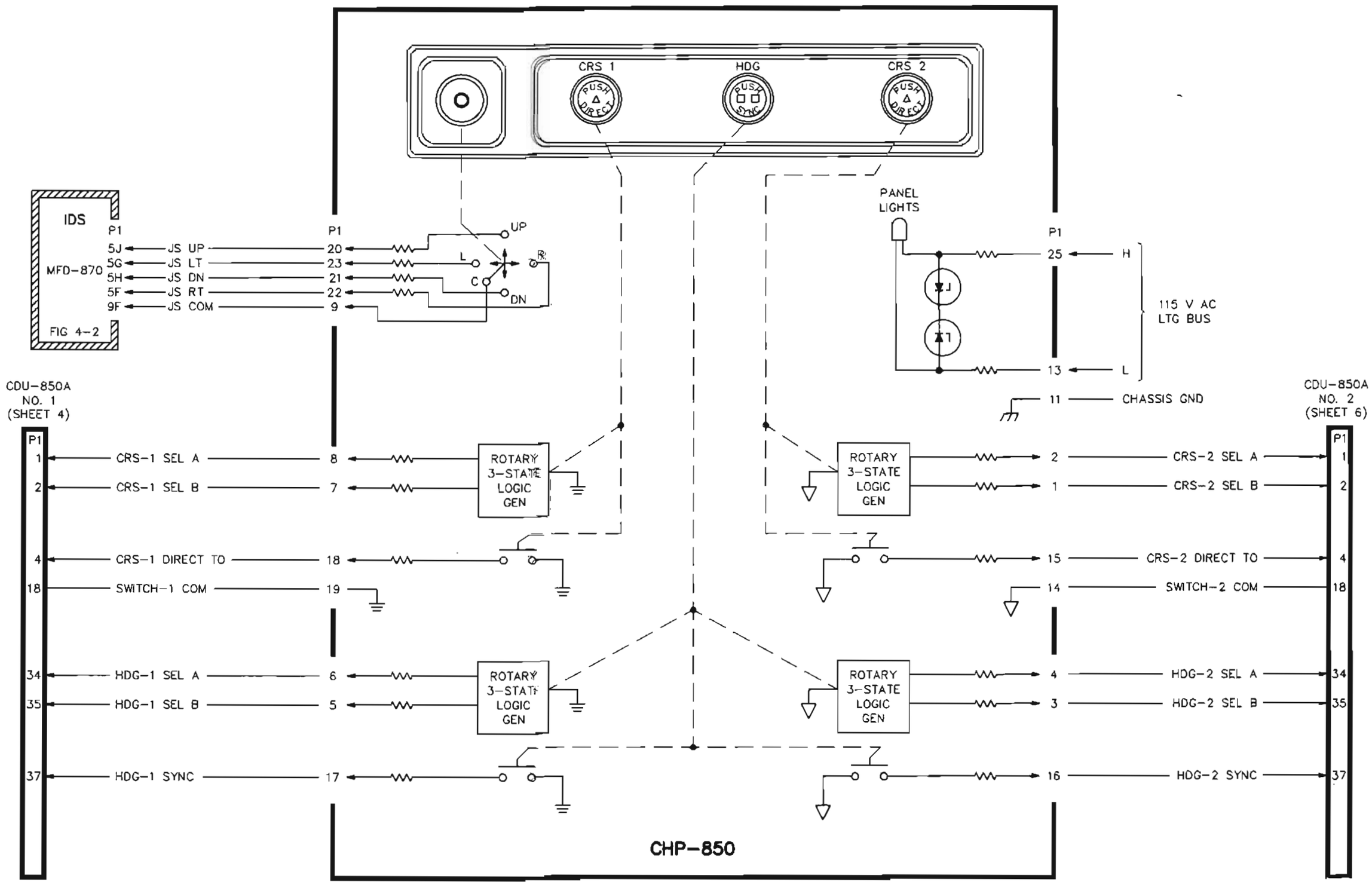

CGO-0055-13-AC-0

FMS System Schematic
Figure 4-7-1 (Sheet 2 of 9)

Refer to figure 4-7-1, sheet 3. This sheet shows the power, data bus I/O, and display portions of the no. 1 CDU-850A control display unit. Sheet 4 shows the panel I/O and the keyboard/line key portions of the unit.

The left CDU is powered by the no. 1 +28-V dc aircraft supply. The low-voltage power supply generates internally required voltage levels, powers the video power supply, and provides drive to the high-voltage regulator. The video power supply generates additional voltage levels required by the video circuits, as well as the screen (300-V dc) and filament (heat) outputs to the crt. A discrete ground from the onside CDU reversionary switch (S202) disables the power supply when the switch is set to the X-SIDE position.

The high-voltage regulator provides drive to the high-voltage power supply. A feedback (V sense) line provides a monitor return used to regulate the amount of drive. The high-voltage supply outputs are the anode (15-kV dc) and focus (2.7- to 4.3-kV dc) levels supplied to the crt. A power monitor circuit provides a shutdown control, which disables the high-voltage supply (through the regulator) and blanks the display if power limits or phosphor protect limits are exceeded.

A single microprocessor directly reads the L-FMS-3 input bus, directly writes the L-CDU-1 output bus, and controls the crt display operation. This processor also reads input data from the control panels and the keyboard assembly. The L-FMS-3 RS-422 input bus brings page formatted display data from the FMC-851A computer. The L-CDU-1 RS-422 output bus supplies CDU keyboard control data and AAP/CHP panel control data to the FMC-851A computer. The microprocessor uses three ports to control CDU operation. Port 0 sources the primary internal 8-bit bidirectional data bus. This D0-D7 bus provides display information to the character generator through a FIFO and gathers program memory data, AAP/CHP panel control data, and CDU keyboard data for use by the processor. Port 1 is used to read RPT/MDA knob function logic from the onside AAP, to read internal FAIL logic, and to address a control decoder. Port 2 is used to address the program PROM and the control decoder.

The character generator is a stroke draw circuit which provides the video and deflection drive to illuminate images on the screen. A FIFO (first in first out) memory circuit provides data transfer between the microprocessor (D0-D7) and the stroke draw circuits (char). Character color and character select display information are decoded from the microprocessor bus.

The character color information is applied to a video generator. The video generator converts this information into red, green, and blue video color outputs. These color outputs are applied to the three cathode drivers in the video amplifier. A video delay is added to sync the cathode drive with the yoke deflection signals.

The character select information is applied to a character sequence counter. This circuit counts out the address of the selected character. Character PROM's "look up" the character associated with this address and apply appropriate timing and digital deflection outputs. The timing associated with the selected character is applied as a control input to the draw time counter. This counter generates appropriate video delay and multiplexer control logic. The video delay is applied to the video generator and the video amplifiers to ensure that the cathode drive and deflection outputs are applied simultaneously to the crt assembly.

The digital deflection output from the character PROM's is applied to two multiplexer circuits. These multiplexers are enabled by control logic from the draw time counter to decode horizontal and vertical analog deflection voltages. These position voltages are integrated and then adjusted for proper offset, gain, and linearity. The resultant horizontal and vertical screen position voltages are converted to current outputs by the deflection power amplifiers. These current outputs are applied to the yoke of the crt assembly and deflect the electron beam to the proper X and Y coordinates on the screen. The front panel BRT knob input and the +28-V dc lighting bus input are applied to an intensity control circuit. This circuit provides analog screen intensity bias output to the video amplifiers.

A power monitor circuit generates shutdown/fail protection outputs if crt levels or power levels exceed preset limits. The vertical deflection return voltage (from the yoke) and a sampling of the red, green, and blue video drive signals are applied to a phosphor protect circuit. If any of these signals become excessive or get lost, damage to the crt could result. The phosphor protect circuit then applies a discrete which trips the power monitor. The +24-V dc power reference level is also monitored and will trip the

power monitor should this level become unacceptable. When either of these two conditions occurs, the power monitor shuts down the high-voltage regulator (to prevent damage to the crt) and toggles a transistor to report a fail condition to the microprocessor.

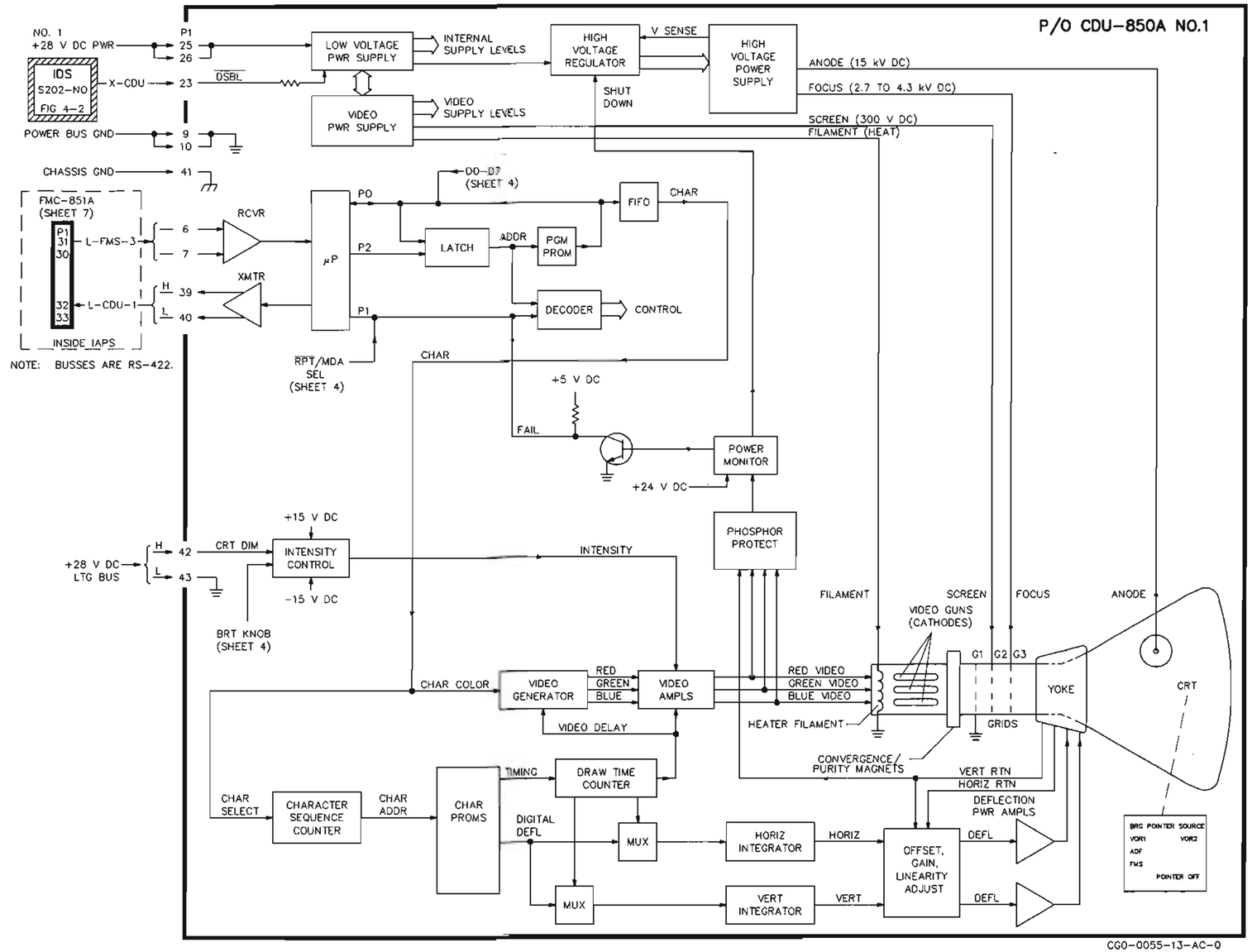

FMS System Schematic
Figure 4-7-1 (Sheet 3 of 9)

Refer to figure 4-7-1, sheet 4. This sheet shows the panel I/O and the keyboard/line key portions of the no. 1 CDU-850A control display unit. Sheet 3 shows the rest of the unit.

Discrete data from the pilot side AAP and the CHP is applied to a latch circuit. This panel I/O data is read from the latch onto the D0-D7 bus by the microprocessor and supplied to the FMC-851A computer.

The following discrete inputs are received from the AAP. RPT (ground)/MDA (open) SEL logic is read directly by port 1 of the processor; this discrete defines the function of the AAP unlabeled control knob as either reporting altitude (RPT ALT) or as minimum decision altitude (MDA). SET ON/OFF logic is read through the latch; this momentary ground requests the reporting altitude or minimum decision altitude display. SET A/B logic is read through the latch; this 3-state logic input changes the reporting altitude or minimum decision altitude display. DH SET ON/OFF logic is read through the latch; this momentary ground requests the decision height display. DH SET A/B logic is read through the latch; this 3-state logic input changes the decision height display. The SWITCH COM ground is wired to the AAP ground to ensure common reference.

The following discrete inputs are received from the CHP. The SWITCH COM-1 ground is wired to the left CHP ground to ensure common reference. CRS-1 SEL A/B logic is read through the latch; this 3-state logic input changes the no. 1 selected course. CRS-1 DIRECT TO logic is read through the latch; this momentary ground requests the direct-to-course function. HDG-1 SEL A/B logic is read through the latch; this 3-state logic input changes the no. 1 selected heading. HDG-1 SYNC logic is read through the latch; this momentary ground requests the heading-synchronize function.

The keyboard and line key assembly is controlled by a keyboard encoder. This encoder applies nine drive discretes to the keyboard, TILT knob, and the line keys. The encoder monitors eight sense returns from these controls to detect activity. Any keyboard or line key action is encoded onto the D0-D7 microprocessor data bus.

Note that the keyboard RANGE and TILT knob position outputs are latched onto the data bus and not read through the keyboard encoder.

The line keys are used primarily to input menu selections. The keyboard contains weather radar controls, a brightness control, radio tune keys, various FMS keys, cursor keys, and a set of alphanumeric keys.

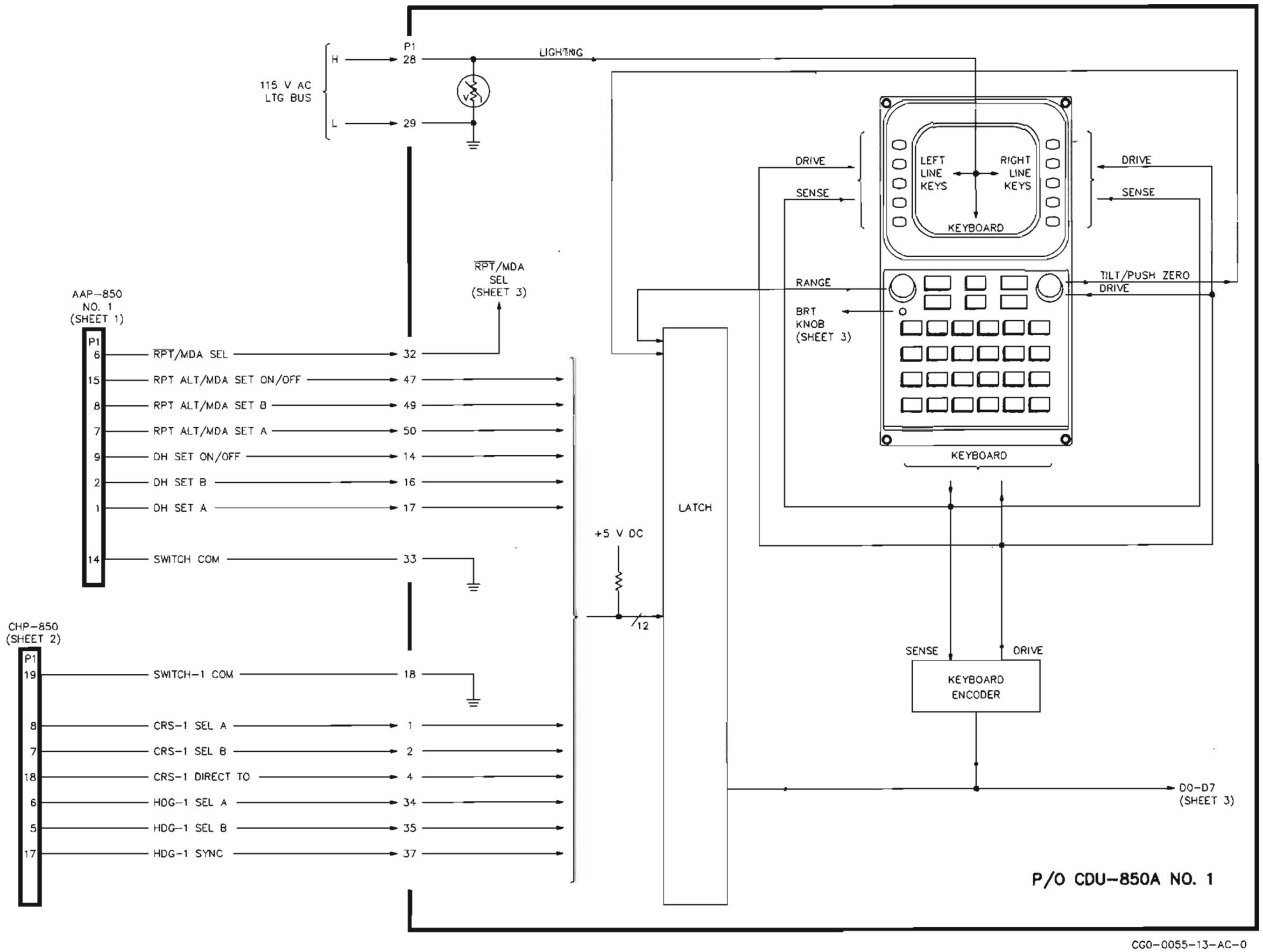

FMS System Schematic
Figure 4-7-1 (Sheet 4 of 9)

Refer to figure 4-7-1, sheet 5. This sheet shows the power, data bus I/O, and the display portions of the no. 2 CDU-850A control display unit. Sheet 6 shows the panel I/O and the keyboard/line key portions of the unit.

Internal CDU operation is described on a previous page.

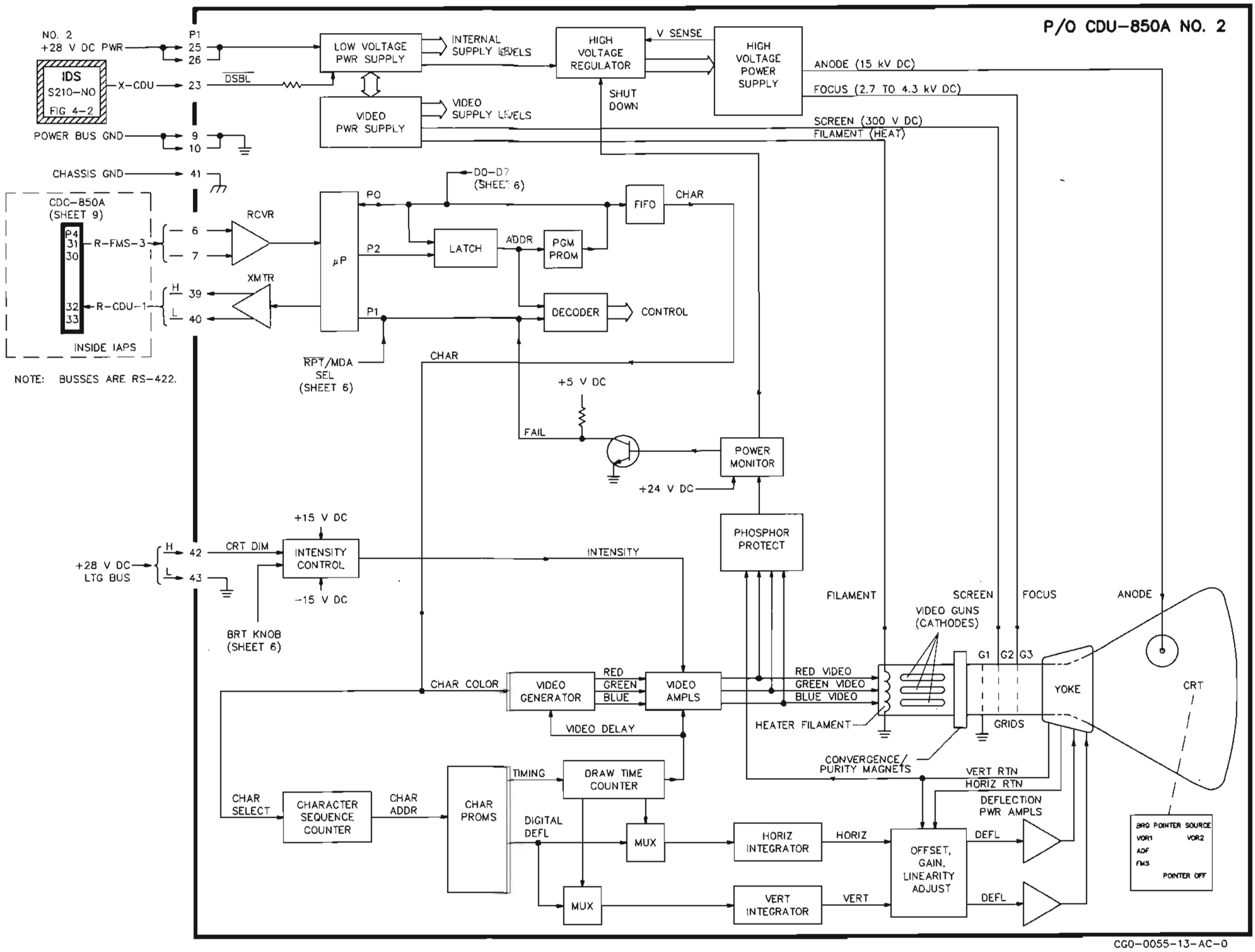

FMS System Schematic
Figure 4-7-1 (Sheet 5 of 9)

Refer to figure 4-7-1, sheet 6. This sheet shows the panel I/O and the keyboard/line key portions of the no. 2 CDU-850A control display unit. Sheet 5 shows the rest of the unit.

Internal CDU operation is described on a previous page.

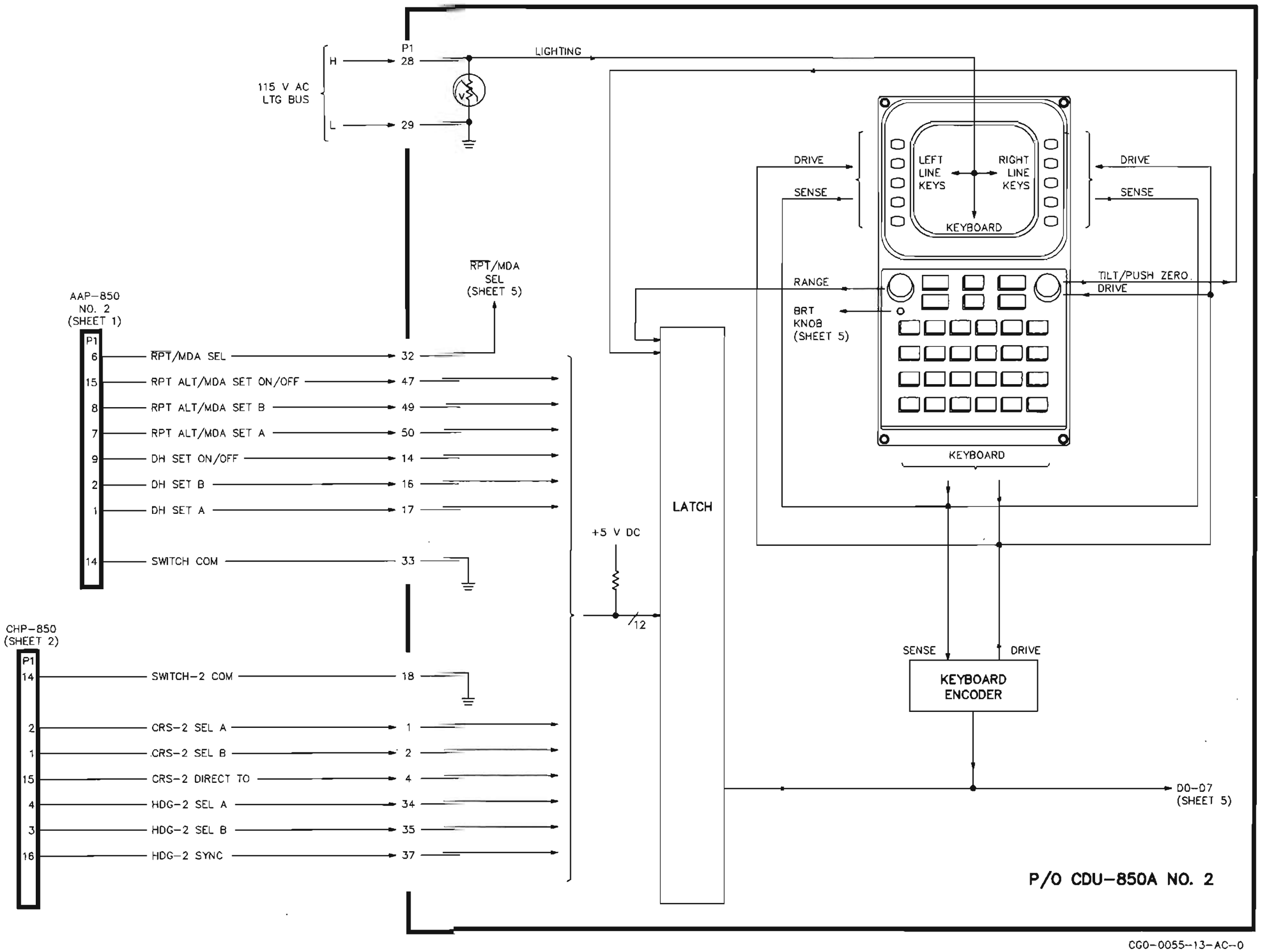

FMS System Schematic
Figure 4-7-1 (Sheet 6 of 9)

Refer to figure 4-7-1, sheet 7. The FMC-851A operates with the FMC-852A to function as one complete left side FMS computer. Sheet 7 shows the FMC-851A; sheet 8 shows the FMC-852A. Note that the FMC-851A and FMC-852A are located physically in the IAPS card cage. ICC-850A (IAPS card cage) pin numbers are shown on this figure whenever a function can be accessed on a 50-pin breakout box. Other connections are internal to the IAPS.

The FMC-851A contains the CDU I/O, ARINC 429 I/O, and data base processor portions of the FMS computer. The required ±12/+5-V dc power levels are supplied by the 1B PWR module in the IAPS.

A 16-bit microprocessor controls FMC-851A operation using a bidirectional address/data bus which interfaces with two latch/transceiver circuits. One latch/transceiver circuit provides communication with the local address and data bus, and the other provides communication with the system address and data bus. The processor also generates parallel SBUS outputs which are used to provide both system and local bus control. An L-INT-1 interrupt discrete from the FMC-852A provides a direct access line to the processor. A PWR VALID discrete from the IAPS 1B PWR module resets the processor if any 1B PWR power level varies from preset limits.

The local latch decodes local address from the AD0-AD15 bus. The local transceiver provides 2-way data transfer between the 8-bit local data bus and the AD0-AD15 bus. This data bus gathers program data from local RAM and PROM memory, discrete data from an input latch, and received data from the four UART's. The data bus also supplies processed data to the local RAM, a bank select latch (data base memory function), an interrupt output flip-flop (L-INT-2 direct access to the FMC-852A processor), and the four UART's.

Local memory consists of PROM and nonvolatile RAM. Local address is applied through decoder circuits to access the local memory. The PROM contains executable routines required to perform the FMC-851A function. The nonvolatile local RAM stores selected course, selected heading, DH alert value, MDA value, RPT ALT value, WXR control words, flight plan data, radio tune preset values, diagnostic (and history) data, and engine exceedance data. The local RAM is powered by a battery level monitor and power switch. An on-board battery provides backup for the +5-V dc level that normally is used to power the RAM. The battery voltage level (A1 LOW BATT) is monitored by the processor.

An input latch reads the discrete warn, ident strap, and the battery level monitor discrete inputs. The DISC WARN input from the 1B PWR module becomes a ground level to warn the processor that the PWR module is preparing to shut down. The ident strap is open, since this is the left side FMS computer. The A1 LOW BATT discrete becomes a ground level when the local RAM keep-alive battery becomes weak. The A2 LOW BATT discrete becomes a ground level when the system data base RAM keep-alive battery becomes weak.

The four UART's allow the FMC-851A to communicate with other LRU's in the aircraft. A dual UART controls RS-422 communication with the left CDU and with cross-side circuits in the CDC-850A. The L-CDU-1 data bus is input through a UART receive port; this bus brings CDU keyboard and AAP/CHP panel control input data to the FMC-851A. The transmit port of this section of the UART applies the L-FMS-3 data bus back to the onside CDU; this bus provides page data for display on the CDU. The other section of this UART controls crosstalk with the CDC-850A coupler. The R-FMS-4 data bus is input through a UART receive port; this bus brings right side requests for FMS data and performs part of a general data transfer function. The transmit port of this UART section applies the L-FMS-4 data bus back to the CDC-850A; this bus supplies the requested FMS data and completes the data transfer function.

A pair of UART's provides the ARINC 429 high-speed communication with the IAPS input/output concentrators and MFD display. The LA-IOC-4 and the LB-IOC-4 data buses are applied through receivers and alternately switched to the receive port of the IOC UART. These two buses provide redundant left side IAPS data to the FMC-851A. Bus switching occurs approximately at 10-second intervals, allowing the processor to monitor (switch to) the backup bus. Input data includes radio parameters, MFD map request data, and diagnostic codes from the left side avionics. The transmit port of this UART returns an L-FMS-1 data bus to the 1A and 1B concentrators in the IAPS. This bus supplies radio tune data, flight plan (waypoint) data, FMS (latitude, longitude, track, position) data, control panel (course, heading, altitude) data, mode select (PFD, ND) data, and weather radar control data.

The RA-IOC-4 and the RB-IOC-4 data buses are applied through receivers and alternately switched to the receive port of the MFD UART. These two

buses provide redundant right side IAPS data to the FMC-851A. Bus switching occurs approximately at 10-second intervals, allowing the processor to monitor (switch to) the backup bus. Input data includes radio parameters, MFD map request data, and diagnostic codes from the right side avionics. The transmit port of this UART returns an L-FMS-2 data bus to the MFD; this is a dedicated bus that supplies requested FMS map/page data directly to the MFD for display. This bus provides geographic map data, checklist page data, diagnostic page data, and FMS related page data information.

The system data base memory is contained on board A2. This memory consists of two banks of RAM, which may be accessed by both the FMC-851A and the FMC-852A using the system address and data bus. This nonvolatile memory stores checklist, flight plan, and data base information.

A latch/transceiver circuit provides communication between the AD0-AD15 microprocessor bus and the system buses. System address (SA0-SA19) is latched from the AD0-AD15 bus and used to access both banks of RAM and its associated chip select decoder, as well as the system RAM resident on the FMC-852A. The transceiver allows the FMC-851A processor to read from and write to the addressed RAM, using the SD0-SD15 system data bus.

A chip select decoder generates the protocol that allows either FMC module access to this memory. This decoder receives bank select logic and bus control from both modules, as well as system address information. Control is generated to enable the appropriate bank and byte of RAM. The chip select decoder also passes VRAM-2 battery power to both banks of RAM; a battery level monitor provides an A2 LOW BATT ground discrete to the processor should the battery level become too low.

A system bus control/arbiter circuit functions with a similar circuit in the FMC-852A to ensure that both modules use shared memory in an orderly manner. Parallel SBUS data provides microprocessor direction to this circuit. A dedicated bus clock supplies 8-MHz synchronized timing to the system bus control/arbiters in both modules. RAM status is monitored, and memory enable is administered through the chip select decoder.

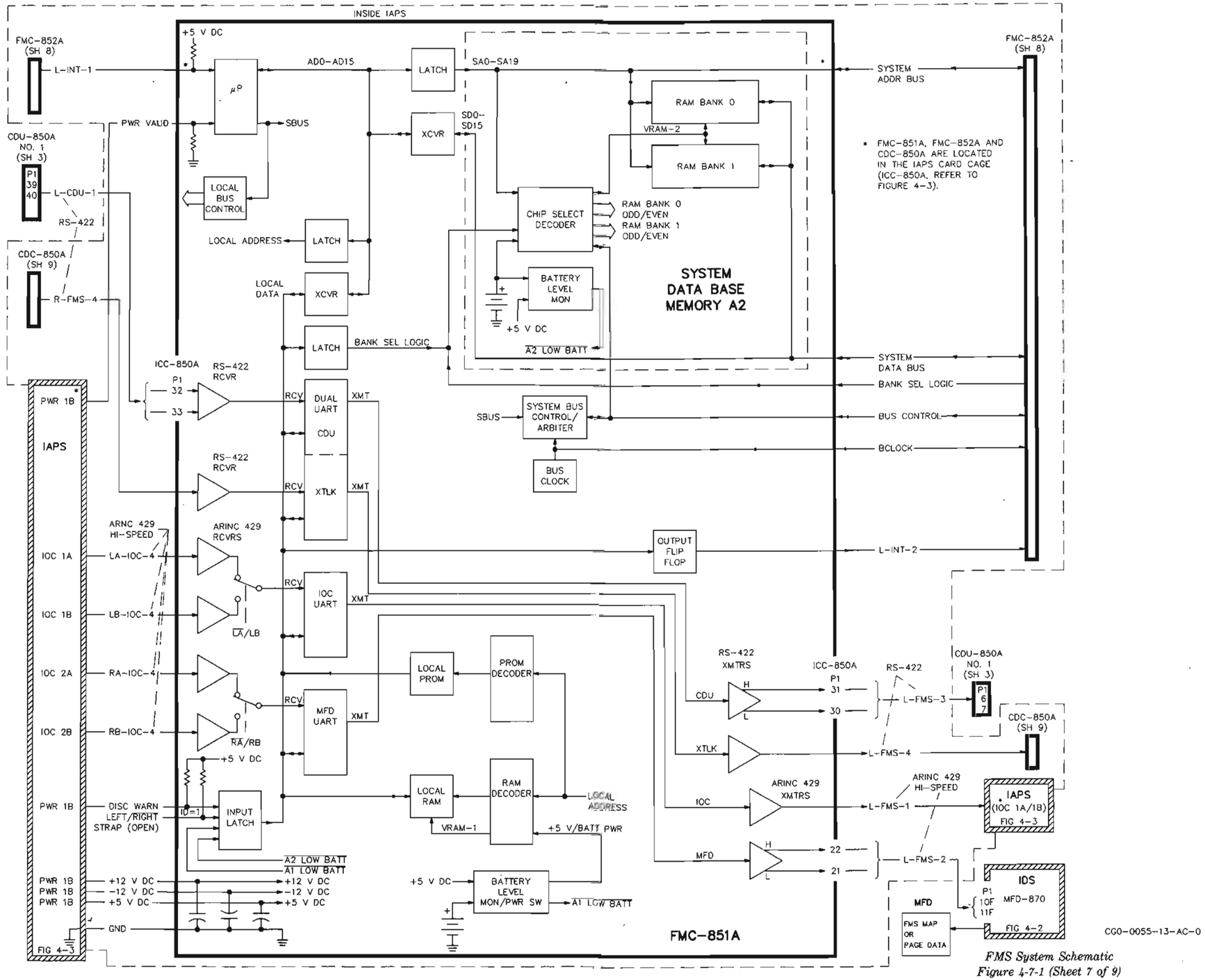

FMS System Schematic
Figure 4-7-1 (Sheet 7 of 9)

Refer to figure 4-7-1, sheet 8. This sheet shows the FMC-852A computer and the DBU-850 data base unit. The FMC-852A operates with the FMC-851A to function as one complete left side FMS computer. Sheet 7 shows the FMC-851A. Note that the FMC-851A and FMC-852A are located physically in the IAPS card cage. ICC-850A (IAPS card cage) pin numbers are shown on this figure whenever a function can be accessed on a 50-pin breakout box. Other connections are internal to the IAPS.

The FMC-852A contains the navigation/flight guidance processor and the disk drive controller portions of the FMS computer. The required +5-V dc power level is supplied by the 1B PWR module in the IAPS.

A 16-bit microprocessor and an associated coprocessor control FMC-852A operation using a bidirectional address/data bus and two latch/transceiver circuits. One latch/transceiver circuit provides communication with the local address and data bus, while the other provides communication with the system address and data bus. The processor also generates parallel SBUS outputs which are used to provide both system and local bus control. An L-INT-2 interrupt discrete from the FMC-851A provides a direct access line to the processor. A PWR VALID discrete from the IAPS 1B PWR module resets the processor if any 1B PWR power level varies from preset limits. A DISC WARN discrete ground warns the processor that the PWR module is preparing to shut down.

The local latch decodes local address from the AD0-AD15 bus. The local transceiver provides 2-way data transfer between the 8-bit local data bus and the AD0-AD15 bus. This data bus gathers program data from local RAM and PROM memory, discrete data from an input latch, and read data from the DBU-850 disk drive. The data bus also supplies processed data to the local RAM, a bank select latch (data base memory function), an interrupt output flip-flop (L-INT-1 direct access to the FMC-851A processor), a motor/reset output flip-flop, and the disk controller circuit (write data).

Local memory consists of PROM and nonvolatile RAM. Local address is applied through decoder circuits to access the local memory. The PROM contains executable routines required to perform the FMC-852A function. The nonvolatile local RAM stores the FMS track value and NAV/flight guidance parameters. The local RAM is powered by a battery level monitor and power switch. An on-board battery provides backup for the +5-V dc level that normally is used to power the local RAM and the system RAM. The battery voltage level (LOW BATT) is monitored by the processor.

An input latch reads the discrete warn, ident strap, and the battery level monitor discrete inputs. The DISC WARN input from the 1B PWR module becomes a ground level to warn the processor that the PWR module is preparing to shut down. The ident strap is open, since this is part of the left side FMS computer. The LOW BATT discrete becomes a ground level when the local RAM keep-alive battery becomes weak.

A disk controller circuit regulates data transfer between the DBU and the FMC-852A. The DBU is a double-sided 3½-inch floppy disk drive that is used to upload data base information or checklist page data. The DBU also may be used to download diagnostic data onto a disk. Isolated +5-V dc DBU power originates in the 1B PWR IAPS module.

The disk controller is addressed by the processor through a disk decoder circuit. The processor also operates the controller reset function and the DBU motor enable through an output flip-flop. The local data bus provides bidirectional data transfer with the disk controller. An interface chip controls the data transfer between the disk controller and the DBU.

The disk controller provides conventional interface with the DBU. Inputs to the DBU are MOTOR ON (drive motor enabled), DR SEL (drive select), DIR (direction select), WR GATE (write gate), HD SEL (head select), STEP (step pulse), and WR DATA (write data). Outputs from the DBU are WPRT (write protect), TRK0 (track zero), RDY (ready), INDEX (index/sector), and RD DATA (read data).

A latch/transceiver circuit provides communication between the AD0-AD15 microprocessor bus and the system buses. System address (SA0-SA19) is latched from the AD0-AD15 bus and used to access the system RAM, as well as the data base RAM resident on the FMC-851A. The transceiver allows the FMC-852A processor to read from and write to the addressed RAM, using the SD0-SD15 system data bus.

The system RAM resides on the FMC-852A. This memory may be accessed by both the FMC-851A and the FMC-852A using the system address and data

ADDENDUM 2

TO

STARSHIP 1 AVIONICS SYSTEM

SYSTEM MANUAL

PART NUMBER 523-0774076, DATED 14 JAN 1989

Insert this addendum sheet facing page 4-143 of the Theory of Operation Section of the manual

The power ground connection at the DBU-850 should be pin P1-2 (not P1-4).

bus. This nonvolatile memory is used by the processors in conjunction with the system data base memory.

A system bus control/arbiter circuit functions with a similar circuit in the FMC-851A to ensure that both modules use shared memory in an orderly manner. Parallel SBUS data provides microprocessor direction to this circuit. The 8-MHz BCLOCK from the FMC-851A supplies synchronized timing to the system bus control/arbiters in both modules.

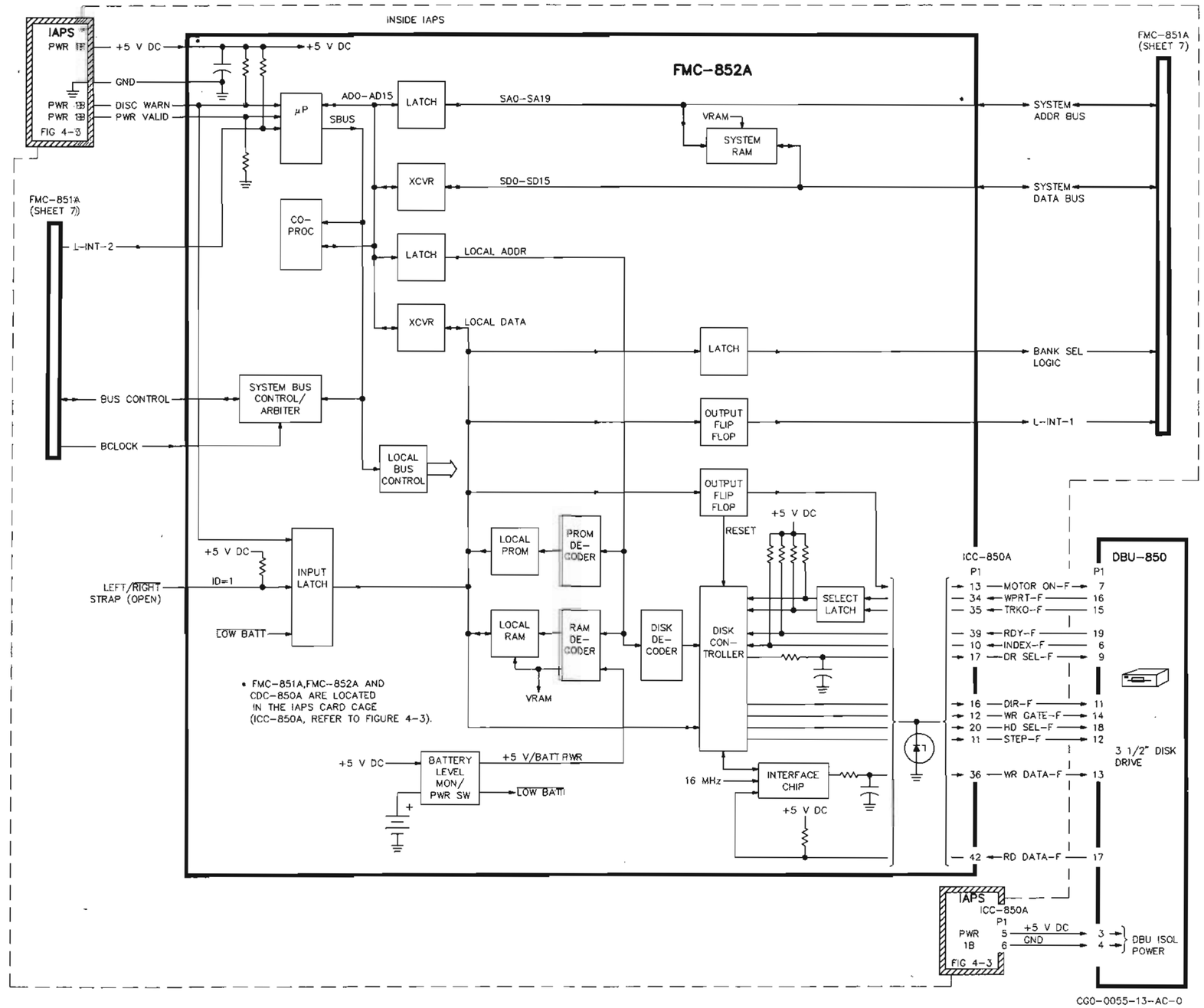

FMS System Schematic
Figure 4-7-1 (Sheet 8 of 9)

Refer to figure 4-7-1, sheet 9. This sheet shows the CDC-850A CDU coupler. This LRU is installed to allow a second CDU-850A control display unit to function in an aircraft equipped with only one flight management computer (FMC-851A and FMC-852A). Note that the CDC is located physically in the IAPS card cage. ICC-850A (IAPS card cage) pin numbers are shown on this figure whenever a function can be accessed on a 50-pin breakout box. Other connections are internal to the IAPS.

The CDC contains CDU processing and ARINC 429 I/O circuits. Required ±12/+5-V dc power levels are supplied by the 2B PWR IAPS module.

A 16-bit microprocessor controls CDC operation using a bidirectional address/data bus. The processor also generates parallel SBUS outputs which are used to provide local bus control. A PWR VALID discrete from the IAPS 2B PWR module resets the processor if any 2B PWR power level varies from preset limits.

A latch decodes local address from the AD0-AD15 bus. A transceiver provides 2-way data transfer between the 8-bit local data bus and the AD0-AD15 bus. This data bus gathers program data from local RAM and PROM memory, discrete data from an input latch, and received data from the four UART's. The data bus also supplies processed data to the local RAM and to the four UART's.

Local memory consists of PROM and nonvolatile RAM. Local address is applied through decoder circuits to access the local memory. The PROM contains executable routines required to perform the CDC function. The nonvolatile local RAM stores selected course, selected heading, DH alert value, MDA value, RPT ALT value, WXR control words, radio tune preset values, and NAV data. The local RAM is powered by a battery level monitor and power switch. An on-board battery provides backup for the +5-V dc level that is used normally to power the RAM. The battery voltage level (A1 LOW BATT) is monitored by the processor.

An input latch reads the discrete warn, ident strap, and the battery level monitor discrete inputs. The DISC WARN input from the 2B PWR module becomes a ground level to warn the processor that the PWR module is preparing to shut down. The ident strap is grounded, since this is a right side coupler. The A1 LOW BATT discrete becomes a ground level when the local RAM keep-alive battery becomes weak.

The four UART's allow the CDC to communicate with other LRU's in the aircraft. A dual UART controls RS-422 communication with the right CDU and with cross-side circuits in the FMC-851A. The R-CDU-1 data bus is input through a UART receive port; this bus brings CDU keyboard and AAP/CHP panel control input data to the CDC. The transmit port of this section of the UART applies the R-FMS-3 data bus back to the onside CDU; this bus provides page data for display on the CDU. The other section of this UART controls crosstalk with the FMC-851A FMS computer. The transmit port of this UART section applies the R-FMS-4 data bus to the FMC-851A; this bus requests FMS data and performs part of a general data transfer function. The L-FMS-4 data bus from the FMC-851A is input through the UART receive port; this bus brings the requested FMS data and completes the data transfer function.

A pair of UART's provides the ARINC 429 high-speed communication with the IAPS input/output concentrators. The LA-IOC-4 and the LB-IOC-4 data buses are applied through receivers and alternately switched to the receive port of the IOC UART. These two buses provide redundant left side IAPS data to the CDC. Bus switching occurs approximately at 10-second intervals, allowing the processor to monitor (switch to) the backup bus. Input data includes radio parameters and diagnostic codes from the left side avionics. The transmit port of this UART returns an R-FMS-1 data bus to the 2A and 2B concentrators in the IAPS. This bus supplies radio tune data, control panel (course, heading, altitude) data, mode select (PFD, ND) data, and weather radar control data.

The RA-IOC-4 and the RB-IOC-4 data buses are applied through receivers and alternately switched to the receive port of the MFD UART. These two buses provide redundant right side IAPS data to the CDC. Bus switching occurs approximately at 10-second intervals, allowing the processor to monitor (switch to) the backup bus. Input data includes radio parameters and diagnostic codes from the right side avionics. The transmit port of this UART is not used.

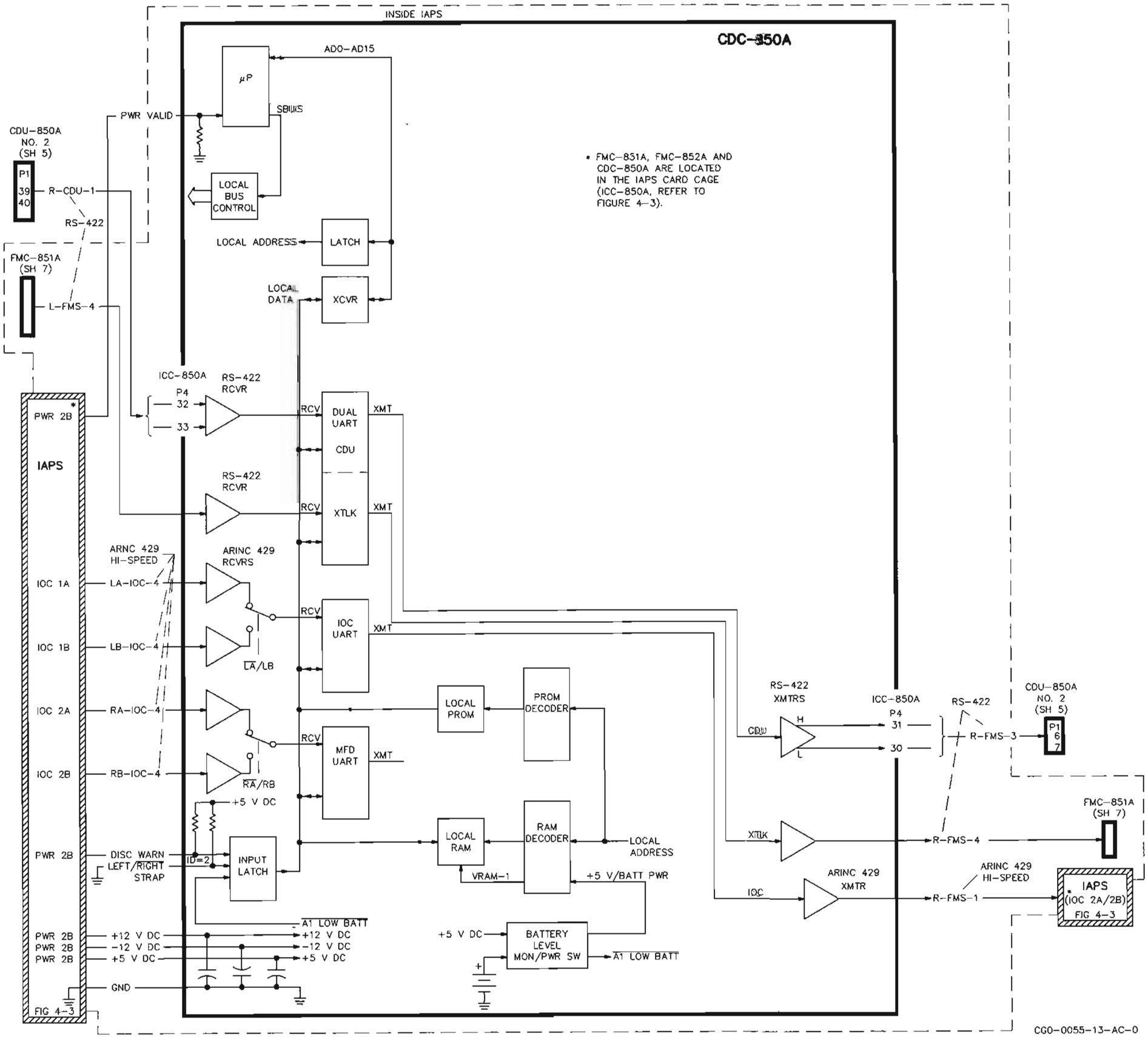

FMS System Schematic
Figure 4-7-1 (Sheet 9 of 9)

This page intentionally left blank.

4.3.7 CS (Communication System)

4.3.7.1 Overview

The CS system contains two panel mounted universal radio tuning units, two VHF COM transceivers, two transponders, and two transponder adapters. The CS is a dual system; the no. 1 (pilot side) system is identical to the no. 2 (copilot) system. Refer to figure 4-8. Each LRU is described below:

RTU-870A No. 1 Radio Tuning Unit
VHF-422A No. 1 VHF Comm Transceiver
TDR-90 No. 1 Transponder
CAD-870 No. 1 Transponder Adapter
RTU-870A No. 2 Radio Tuning Unit
VHF-422A No. 2 VHF Comm Transceiver
TDR-90 No. 2 Transponder
CAD-870 No. 2 Transponder Adapter

The no. 1 RTU-870A is a universal controller that is used primarily by the pilot to tune the left side COM and NAV radios. This single LRU provides ARINC control words to tune the VHF-422A, the TDR-90 (through the CAD-870), and the VIR/DME/ADF radios in the NS system. Outputs are applied to both left and right side radios, so that the RTU is capable of tuning any COM or NAV radio during reversion modes. A reversion switch can disable this RTU or cause the RTU to display engine data; in either reversion mode, the left radios are then tuned by the right RTU. A remote MKR BCN switch selects marker beacon receiver sensitivity; the RTU scans this switch and encodes the information into the tune word supplied to the VIR radio. A remote RAD RMT switch can disable the remote tune function and cause the RTU's to ignore tune inputs from the FMS (CDU and autotune).

The no. 1 VHF-422A is a multichannel VHF voice transceiver. The VHF-422A normally is tuned by the left RTU-870A, but also may be tuned by the right RTU-870A or by the IAPS system (in burst mode). The VHF-422A audio output is applied to the aircraft audio system, and a digital bus output is applied to the IAPS system. This digital output contains the COM frequency, which then is echoed back to the RTU's by the IAPS.

The no. 1 TDR-90 is an A (ident) and C (altitude) mode transponder. This transponder is active when the remote ATC switch is set to 1. When selected, the TDR-90 responds to all valid ATC radar interrogations with a coded reply signal. This reply is used by the ATC controller to locate and identify the aircraft. A remote IDENT switch keys the transponder (through the RTU) to transmit an aircraft identification pulse (along with the normal reply).

The no. 1 CAD-870 is an adapter unit that allows the TDR-90 to interface with ARINC 429 units. Transponder control code and altitude normally is applied by the left RTU-870A, but also may originate from the right RTU-870A. This ARINC code is converted by the CAD to parallel format and then applied to the TDR-90. A digital bus also is generated and applied to the IAPS system. This digital output contains the ATC code, which then is echoed back to the RTU's by the IAPS.

The no. 2 RTU-870A is a universal controller that primarily is used by the copilot to tune the right side COM and NAV radios. This single LRU provides ARINC control words to tune the VHF-422A, the TDR-90 (through the CAD-870), and the VIR/DME/ADF radios in the NS system. Outputs are applied to both left and right side radios, so that the RTU is capable of tuning any COM or NAV radio during reversion modes. A reversion switch can disable this RTU or cause the RTU to display engine data; in either reversion mode, the right radios are then tuned by the left RTU. A remote MKR BCN switch selects marker beacon receiver sensitivity; the RTU scans this switch and encodes the information in the tune word supplied to the VIR radio. A remote RAD RMT switch can disable the remote tune function and cause the RTU's to ignore tune inputs from the FMS (CDU and autotune).

The no. 2 VHF-422A is a multichannel VHF voice transceiver. The VHF-422A normally is tuned by the right RTU-870A, but also may be tuned by the left RTU-870A. The VHF-422A audio output is applied to the aircraft audio system, and a digital bus output is applied to the IAPS system. This digital output contains the COM frequency, which is then echoed back to the RTU's by the IAPS.

The no. 2 TDR-90 is an A (ident) and C (altitude) mode transponder. This transponder is active when the remote ATC switch is set to 2. When selected, the TDR-90 responds to all valid ATC radar interrogations with a coded reply signal. This reply is used by the ATC controller to locate and identify the aircraft. A remote IDENT switch keys the transponder (through the RTU) to transmit an aircraft identification pulse (along with the normal reply).

The no. 2 CAD-870 is an adapter unit that allows the TDR-90 to interface with ARINC 429 units. Transponder control code normally is applied by the right RTU-870A, but also may originate from the left RTU-870A. This ARINC code is converted by the CAD to parallel format and then applied to the TDR-90. A digital bus also is generated and applied to the IAPS system. This digital output contains the ATC code, which then is echoed back to the RTU's by the IAPS.

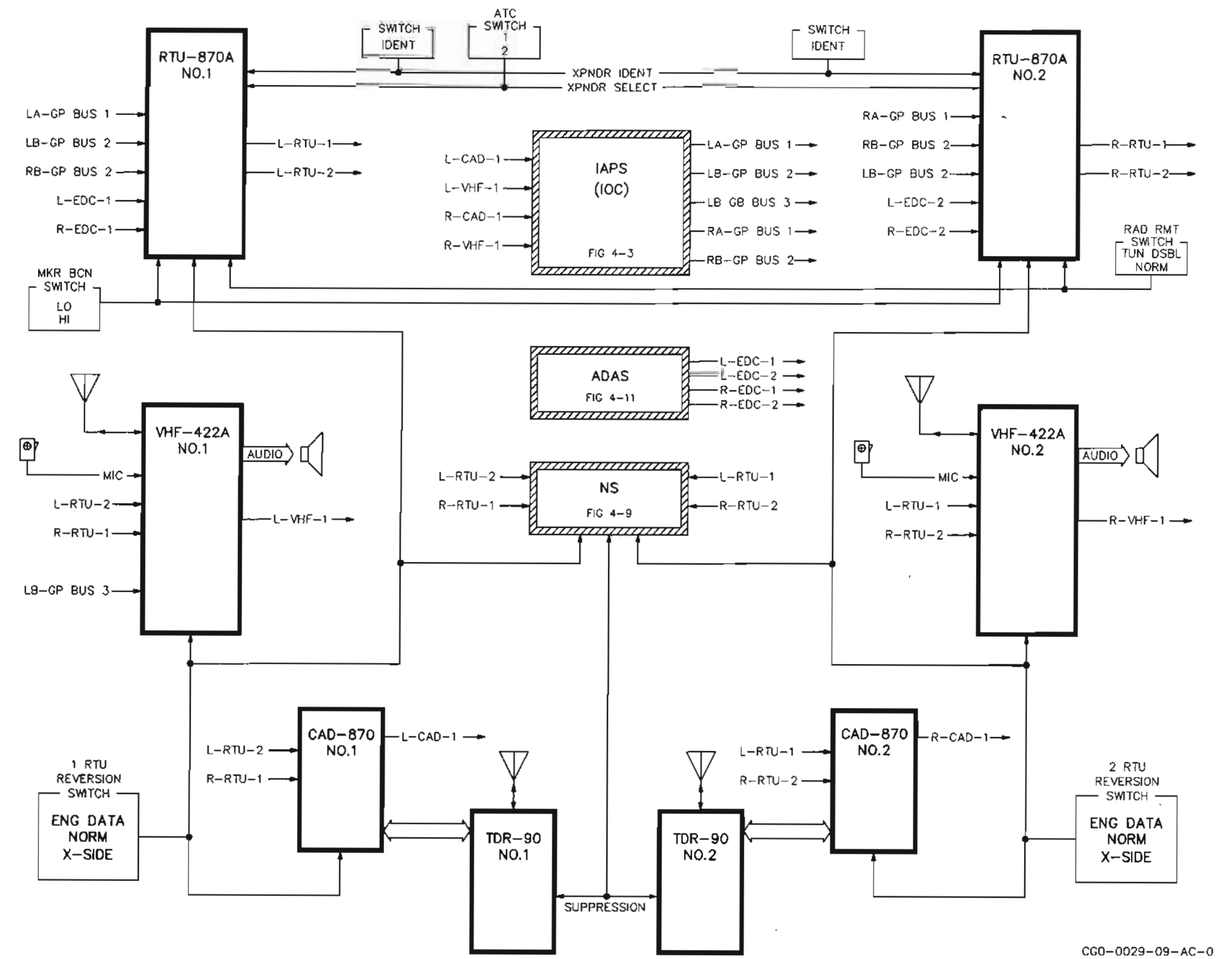

CS (Communication System) Overview
Figure 4-8

4.3.7.2 System Schematic

The CS is a dual VHF COM/ATC communication system. Refer to figure 4-8-1, sheet 1. This sheet shows the no. 1 RTU-870A radio tuning unit and the pilot side reversion switch.

The no. 1 RTU is a centralized controller that is used primarily by the pilot to tune the left side COM and NAV radios. This single LRU displays and selects the operating modes and frequencies (or ATC reply code) that control the VHF; the TDR (through the CAD); and the VIR, DME, and ADF radios in the NS system. Tuning outputs are applied to both left and right side radios, so that the RTU is capable of tuning any COM or NAV radio during reversionary modes. A reversion switch can disable this RTU or cause the RTU to display engine data. In either of these reversion modes, the left side radios are tuned by the right RTU.

The RTU consists of a microprocessor, pushbutton/knob/line keys, a data bus I/O circuit, and a gas discharge display assembly. The microprocessor controls RTU operation using an 8-bit bidirectional AD0-AD7 data bus, which interfaces with a pair of data transceivers and an address latch. One data transceiver allows the processor to control the memory and I/O functions using data bus A. The other data transceiver allows the processor to control the display functions using data bus B. The address latch provides internal device control.

No. 1 +28-V dc power is applied to the RTU power supply on two separate rear connector pins. The power supply generates all internally required levels; this supply is disabled when the left RTU reversion switch is set to DISABLE.

The power supply feeds two monitor circuits. A power-on-clear monitor is a comparator that resets the microprocessor whenever the +5-V dc level fluctuates below a reference level. A memory store monitor is a comparator that activates a power sustain circuit and applies a STORE discrete whenever the +5-V dc level is low or when power is removed from the RTU. This power sustain circuit powers nonvolatile RAM, which is strobed by the STORE discrete to read current RTU control data just prior to power loss or shutdown. When power is reapplied, this data is transferred back to active memory.

The microprocessor applies specific data to a system timing block. This counter network generates UART enable logic and clocks the watchdog timer. The watchdog timer resets the microprocessor if program execution takes too long to complete. The timer is regularly initialized by the processor; if the timer counts down before a routine is finished, a reset is generated to prevent the processor from hanging up.

Data bus A allows the processor to control the memory and I/O functions. This bus gathers stored control data from nonvolatile memory, RTU control laws from program EPROM, discrete input and knob/switch settings from a buffer, and input data from the UART. Processed data is applied to the nonvolatile memory, a system timing block, an output buffer, a dimming d/a circuit, and the UART.

Front panel RTU pushbutton, knob, and line key status is read by the microprocessor along with reversionary mode discretes through a 3-section input buffer. The ATC ID, ATC STBY, DME HLD, 1/2, COM SQ, and ADF TEST pushbuttons are read through one section of the buffer. The two rotary knobs are read through another section of the buffer; these knobs are wafer switches used to change the tune frequencies or ATC reply code. The five RTU line keys and two discrete reversionary mode inputs are monitored through a third section of the buffer. The P1-39 reversion mode discrete becomes a ground when the left RTU reversion switch is set to the ENG DATA position; this causes the RTU to process and display engine parameters. The P1-63 reversion mode discrete becomes a ground when the right RTU reversion switch is set to either ENG DATA or X-SIDE; this causes the left RTU to tune both the right and left side radios.

A UART controls the ARINC 429 low-speed data bus I/O interface. The processor uses data bus A to read five multiplexed serial input buses and to write transmit data onto two serial output buses. The L-EDC-1, R-EDC-1, RB-GP BUS 2, LB-GP BUS 2, and LA-GP BUS 1 input data buses are alternately selected and multiplexed to the UART receive port. The EDC buses from the ADAS system bring engine data parameters to be displayed in reversionary mode. The GP buses from the IAPS input/output data concentrators echo frequency data back to the processors.

When the UART is enabled to transmit, processed data is applied from the UART transmit port to two output amplifiers. The L-RTU-1 data bus output is applied to the no. 2 VHF, CAD, VIR, ADF, and DME. The L-RTU-2 data bus output is applied to the no. 1

VHF, CAD, VIR, ADF, and DME. These outputs contain the following onside tune data: VHF COM frequency, ATC reply code, VOR/ILS frequency, ADF frequency, DME frequency, and altitude.

The microprocessor reads the display dim bus using a successive approximation technique. The analog dim bus input is applied to the noninverting input of a comparator. The processor applies a series of approximate dim reference levels on data bus A to a digital-to-analog converter. The digital references are converted to a dc ramp and applied to the inverting input of the comparator. When the approximated reference trips the comparator, the processor knows the desired dim setting.

Data bus B allows the processor to control the gas discharge display functions. This data bus is applied to the cathode display drivers, the anode display drivers, and a decoding buffer circuit.

The gas discharge display is configured in a matrix fashion, using 8 anodes (for the whole display) and 16 cathodes for each row in the display. Display segments are lit according to microprocessor generated anode and cathode strobe voltages.

A buffer decodes DME HOLD and REPLY annunciator logic and display dim control. A ground output from the buffer lights the DME HOLD annunciator when the DME HLD pushbutton is pressed. A ground output from the buffer lights the REPLY annunciator when the TDR replies to an interrogation. Display dim setting is determined by the processor as described above. A dim control code is provided on data bus B, through the buffer, to a display current control circuit. The resulting dim control signal is a duty cycle output which determines the length of time that the display segments remain on and also the level of pulse modulation applied to the cathode drivers. The RTU BRT knob functions as a fine-tune dimming control and adjusts the amplitude of the modulating signal in the display current control circuit.

The 1 RTU reversionary switch (S207) is a 3-pole, 3-position switch. At the NORM position, the left RTU displays left side radio data.

At the X-SIDE position, a ground is applied from the C1 switch section to disable the left RTU. A ground is applied from the C2 section to cause the right RTU to start tuning the left (and right) radios and to cause the left radios to accept right side tune data on input port A. If the 2 RTU reversionary switch (S208) also is set to either X-SIDE or ENG DATA, a ground is applied from the C3 section to cause the left VHF and VIR to accept burst tune IAPS data on input port C.

At the ENG DATA position, a ground is applied from the C1 switch section to cause the left RTU to process and display only engine data parameters. A ground is applied from the C2 section to cause the right RTU to start tuning the left (and right) radios and to cause the left radios to accept right side tune data on input port A. If the 2 RTU reversionary switch (S208) also is set to either X-SIDE or ENG DATA, a ground is applied from the C3 section to cause the left VHF and VIR to accept burst tune IAPS data on input port C.

The aircraft MKR BCN toggle switch (S217) selects HI or LO sensitivity operation of the (VIR) marker beacon receivers. When high sensitivity is selected, a ground is applied to P1-61 of both RTU's. This ground is read from a buffer by the microprocessor and encoded onto the VIR tune word applied to the VIR radio.

The aircraft ATC toggle switch (S224) selects either the left (1) or right (2) transponder to be active. When TDR no. 1 is selected, a ground is applied to P1-13 of both RTU's. This ground is read from a buffer by the microprocessor.

The remote transponder IDENT switch (S218) initiates transmission of an ATC ident pulse. When this button is pressed, a ground is applied to P1-11 of both RTU's. This ground is read from a buffer by the microprocessor and encoded onto the ATC tune word applied to the selected CAD (to the TDR).

The aircraft RAD RMT toggle switch (S225) disables the system remote tune function; the RTU then ignores CDU tune and NAV autotune words from the FMS. When this switch is set to TUN DSBL, +28 V dc is removed from P1-12 of both RTU's. This open is read from a buffer by the microprocessor.

Pins 57 and 64 also are monitored by the processor through the buffer. P1-57 is strapped to P1-53 (ground) when a second ADF is not installed. The P1-64 ident pin is open for the left RTU.

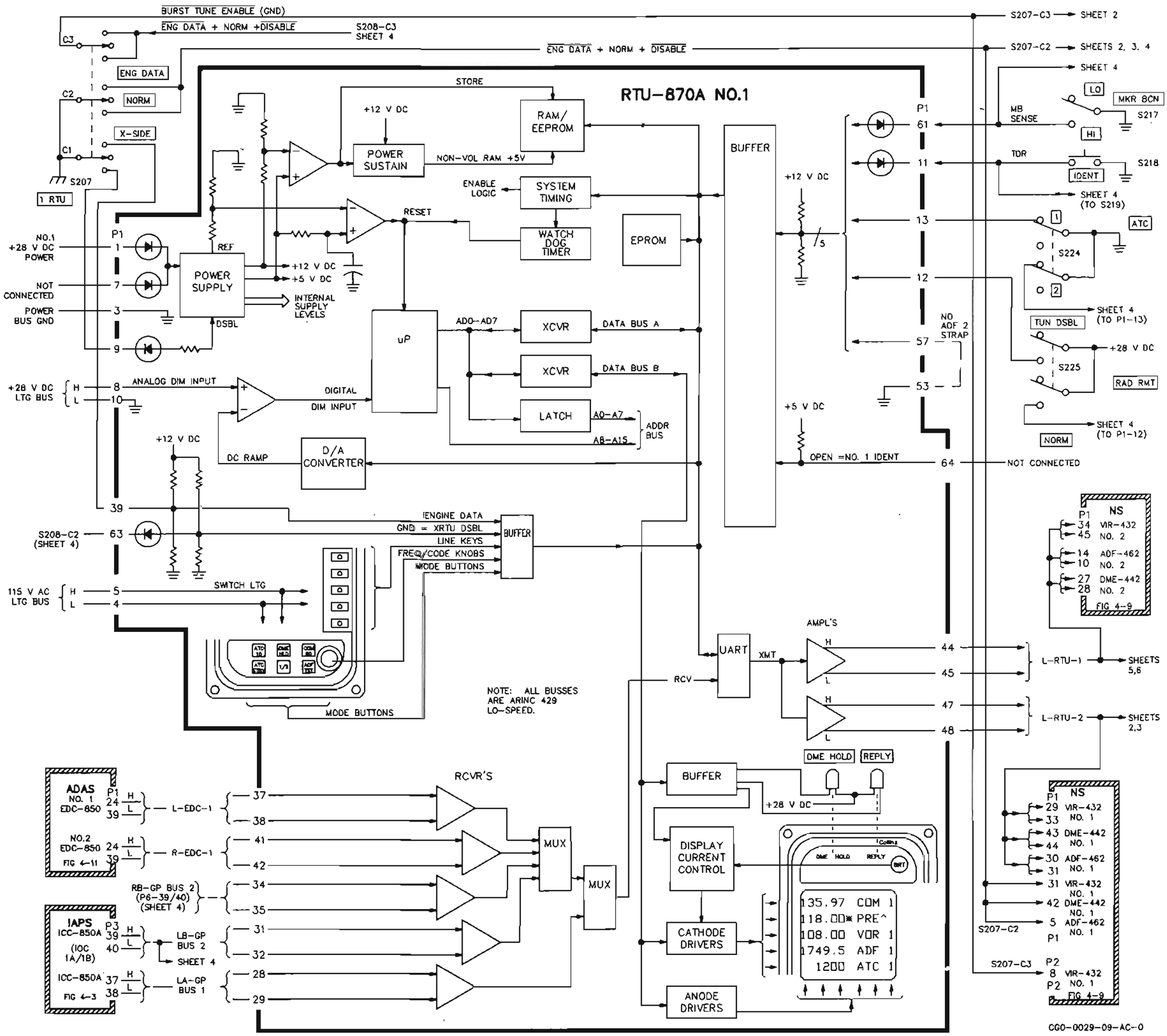

CS System Schematic
Figure 4-8-1 (Sheet 1 of 6)

Refer to figure 4-8-1, sheet 2. The no. 1 VHF-422A is a multichannel COM transceiver that provides pilot side 2-way AM voice communications. The VHF normally is tuned by the left RTU, but also may be tuned by the right RTU or by the IAPS system (in burst mode). The VHF audio output is applied to the aircraft audio system, and a digital bus output is applied to the IAPS system.

The VHF consists of an ARINC I/O microprocessor, a main microprocessor, a superheterodyne receiver, a broadband transmitter, and an audio amplifier. Operating power is provided by the no. 1 +28-V dc aircraft supply. An internal power relay switches the +28-V dc voltage input to the power supply circuits; these circuits generate all internal supply levels.

The ARINC microprocessor selects and reads one of three tune data bus inputs, supplies tune data to the main microprocessor, and formats the ARINC output data bus. Three ARINC 429 low-speed data buses are received and input to a multiplexer. The R-RTU-1 bus brings tune data from the right RTU, the L-RTU-2 bus brings tune data from the left RTU, and the LB-GP BUS 3 bus brings tune data from the IAPS. The processor scans the BURST TUNE and RX PORT A/B ENABLE discretes from the left RTU reversionary switch and then applies RX PORT SELECT logic to the multiplexer. The multiplexer then supplies tune data from the selected input port to the processor. Normally, port B is selected and the VHF is tuned by the left RTU. When the left RTU reversionary switch is set to ENG DATA or to X-SIDE, a ground is applied to pin 14, which selects port A (right RTU) tune data. When both left and right RTU reversionary switches are set to either ENG DATA or X-SIDE, a ground is applied to pin 7, which selects port C (IAPS) burst tune data. The selected tune data is supplied in CSDB format to the main microprocessor.

The main microprocessor controls the VHF receive and transmit functions. The processor reads selected tune data, source ident, keyline logic, and monitor/control input information. The processor generates CSDB data, squelch test logic, XFR tone, synthesizer data/clock/enable, XMT mode logic, and 106.7-kHz reference outputs.

The selected tune input data is read in CSDB format and used to program the frequency synthesizer. The source ident is read through a shift register; the ident strap (pin 28) is open for the no. 1 VHF. Filtered keyline logic from the PTT microphone button selects transmit mode. Transmitter temperature and transmit power levels are digitized and monitored by the processor.

Processed CSDB output data is applied to the ARINC processor, where it is converted to ARINC-429 format and transmitted on the L-VHF-1 bus to the IAPS. Squelch test logic and the transfer tone are applied to the squelch circuit and to the audio amplifier respectively. Data, clock, and enable outputs are generated and applied as tune frequency program input to the LSI frequency synthesizer. XMT mode logic is generated to select internal receive or transmit operation. The 106.7-kHz output is a frequency reference for the modulator circuit.

In receive mode, a VHF communication signal is input from the antenna to the transmit/receive (tr) diode switch. These two diodes are forward biased in the receive mode to isolate the antenna from the transmitter. The input signal is processed through a preselector and applied to the dual conversion receiver. The preselector contains four rf filters to attenuate undesired signal components.

A SIMULCOMM-2 input from the right VHF also is applied to the preselector; a KEY-2 ground reduces receiver sensitivity when the other VHF is transmitting.

The main microprocessor reads the tune frequency from the ARINC processor and applies appropriate data/clock/enable control to program the synthesizer. The synthesizer is an LSI device which generates frequency dependent TUNE VOLTAGE and RCV 1ST INJ outputs during receive mode. The TUNE VOLTAGE output is a dc level that is used to tune the center frequency of the preselector. The RCV 1ST INJ output is a frequency injection signal that is related directly to the tune frequency.

The preselector output is input to the dual conversion receiver circuit; injection frequencies are provided by the synthesizer and a local oscillator. The receiver provides if signal output to the squelch circuit and through a transistor detector to an audio compressor. The squelch circuit automatically operates a squelch switch which either blocks or passes the received audio signal. The squelch circuit opens the squelch switch if phase noise is excessive or if multiple carriers are received. The detected (received) audio is compressed to reduce loudness variations and then passed through the squelch switch to the audio amplifier.

In transmit mode, the pilot's microphone applies PTT push-to-talk logic and MIC AUDIO voice signal to the VHF. The PTT logic ground initiates keyline control to the main microprocessor (and to an audio relay) and also applies a KEY-1 SIMULCOMM ground to the right side VHF. The pilot voice signal is applied through an audio compressor (which maintains consistent depth of modulation) to the modulator input.

When the keyline control input becomes a ground level, the main microprocessor initiates transmit mode. If the monitored transmitter temperature and internal power levels are within acceptable limits, the processor applies logic high XMT MODE enable to the modulator. The modulator uses a 106.7-kHz reference frequency to operate. The enabled modulator applies XMT MODE POWER and XMT SIGNAL outputs. The XMT MODE POWER output applies enable power to the transmitter and reverse biases the two tr diodes to isolate the antenna from the receiver. The XMT SIGNAL output to the transmitter is the AM modulated voice signal.

The transmitter is a 4-stage, 16-watt amplifier. The transmitter is frequency tuned by the RF XMT INJ output from the synthesizer. The synthesizer is programmed by the processor to apply tune frequency dependent injection to the transmitter during transmit mode. The transmitter output is then low-pass filtered and transformer coupled to the antenna. The transformer allows the processor to monitor forward and reverse transmit power and also applies sidetone audio to the audio amplifier.

The audio amplifier receives transfer tone, sidetone, and received audio inputs. The amplified audio output is applied through a transformer to the aircraft audio system. Separate received, sidetone (transmit), and combined (received and transmit) outputs are provided; an audio relay (controlled by keyline logic) selects either received or sidetone audio output.

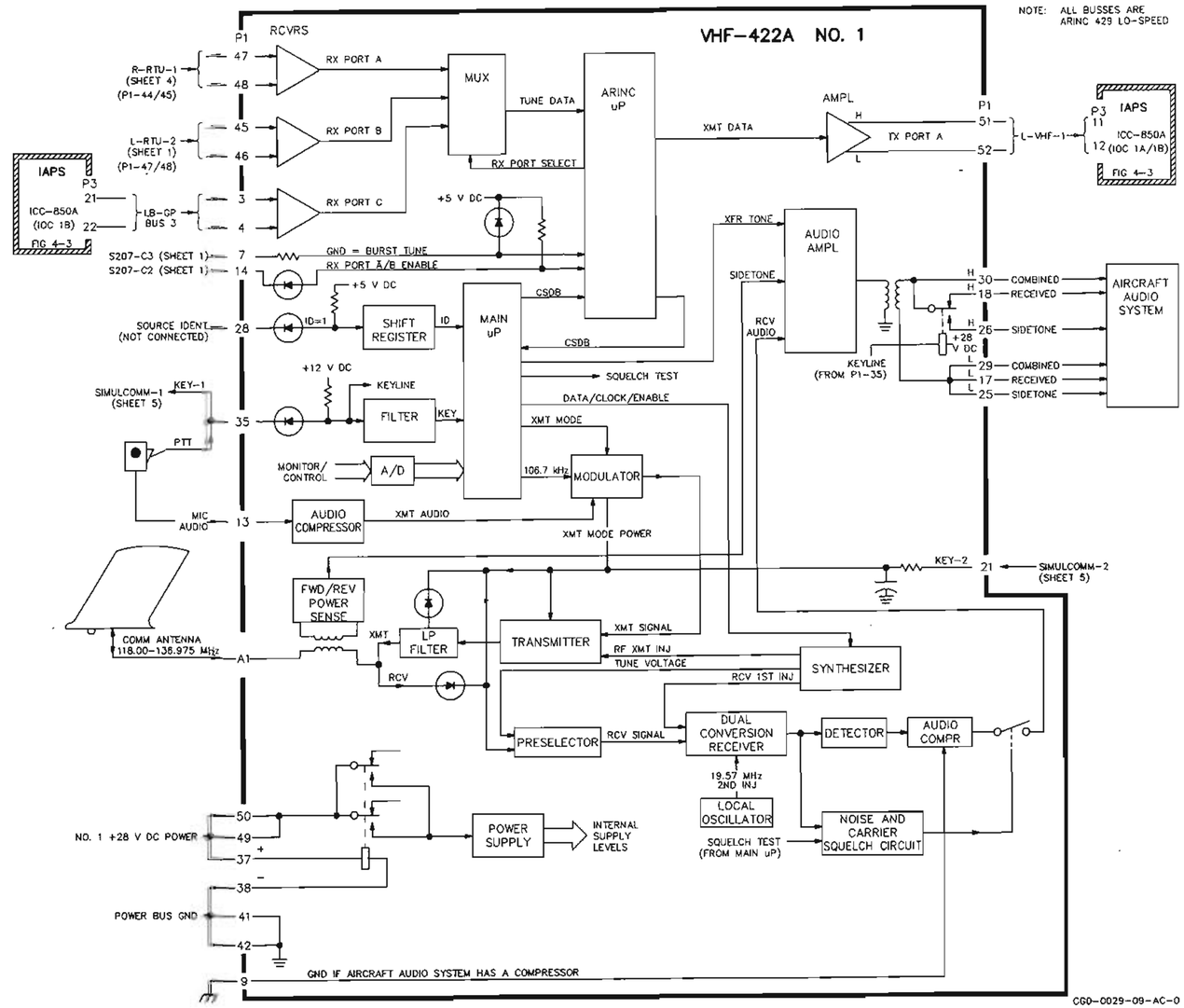

CS System Schematic
Figure 4-8-1 (Sheet 2 of 6)

Refer to figure 4-8-1, sheet 3. The no. 1 CAD-870 converts ARINC 429 low-speed ATC reply code and altitude data into discrete mode A and mode C parallel data for the no. 1 TDR-90. The TDR automatically replies to ground controller interrogations with coded identification and altitude transmissions. Control code and mode selection data normally is applied by the left RTU, but also may be applied by the right RTU.

The CAD consists of a microprocessor, a UART, and a latch decoder. Operating power is derived from the no. 1 +28-V dc aircraft supply; an internal power supply generates the required CAD supply levels.

The microprocessor reads source identification and reply status discrete inputs and operates an 8-bit bidirectional data bus to control the CAD operation. The processor also generates opcode control to the UART. A heartbeat monitor resets the microprocessor if program execution time becomes excessive; the reset ensures the processor is not hung up in an endless loop.

The source identification discrete input is read by the processor through a buffer. This strap input (pin 23) is open for the no. 1 CAD-870. The TDR-90 transponder reply status is monitored by the processor through an identical buffer. This input (pin 40) becomes a ground level whenever the transponder replies to an interrogation.

An 8-bit bidirectional data bus gathers control data from the UART and supplies processed output data to the UART and to the latch decoder. Two ARINC 429 low-speed data buses are received and applied to a bus selector switch. The R-RTU-1 bus brings selected reply code, selected operating mode, and altitude data from the right RTU to receive port A. The L-RTU-2 bus brings selected reply code, selected operating mode, and altitude data from the left RTU to receive port B. The left RTU reversionary switch applies RX PORT A/B SELECT logic to operate the electronic bus selector switch. Normally, port B is selected and the CAD is controlled by the left RTU. When the RTU reversionary switch is set to either ENG DATA or X-SIDE position, a ground is applied to pin 43, which selects port A (right RTU) control data. The selected input bus is applied to the receive port of the UART and read by the microprocessor. The processor then returns reply code, reply status, and input altitude values on the data bus to the UART; this code is transmitted on the L-CAD-1 ARINC 429 low-speed output data bus to the IAPS.

The microprocessor applies coded transponder output data onto the internal data bus. This data is decoded by four octal latches. The latched data is then buffered and applied as parallel mode A ident data, mode C altitude data, and control data to the TDR. A ground at the rear connector pin of any mode A or mode C output indicates an active state. The control outputs are ON (ground)/STBY (open), MODE SEL C (ground), TEST (ground), and IDENT (+5-V dc current source) logic.

The TDR consists of a receiver, a decoder, an encoder interface matrix, an encoder, and a 1090-MHz transmitter. Operating power is derived from the no. 1 +28-V dc aircraft supply; an internal power supply generates the required TDR supply levels.

The TDR is interrogated by the 3-pulse side-lobe suppression (sls) method. The 1030-MHz interrogation input is low-pass filtered and applied through an isolating diplexer to the preselector. The diplexer isolates the transmitter from the antenna in receive mode. The preselector is a 1030-MHz bandpass filter which rejects images and spurious responses. The filtered interrogation input is then applied to a heterodyne receiver. An automatic overload circuit monitors ENCODE GATE ENABLE (transmit) logic and reduces the receiver sensitivity if the transponder reply rate becomes excessive. This circuit causes the TDR to reply only to nearby stations when there is interference from weaker, more distant stations.

The receiver uses a local oscillator to produce an amplified 60-MHz if output. This signal is video detected and applied to a video pulse processor. This processor performs validity checks on the detected signal. An interrogation output is applied only when the detected signal has proper pulse width, pulse amplitude, and relative amplitude difference. If the received signal is acceptable so far, it is passed to a monitor circuit and to the sls decoder.

The sls decoder determines the final validity and mode of the interrogation signal. If the signal is valid, the encoder is enabled and the interrogation signal is applied to the encoder interface matrix. The decoder then applies either valid A-DECODE (ident mode) or C-DECODE (altitude mode) logic to AND gates, which enable altitude or ident input to the encoder input circuits.

The encoder interface matrix gates the interrogation decoder output with either the A CODE (identification) or the C CODE (altitude) parallel reply data from the CAD. A shift register adds an IDENT pulse, if selected. The resulting programmed code is applied to the encoder.

The encoder is enabled by the decoder if the interrogation is valid. This circuit then reads the coded input and generates ENCODE GATE ENABLE logic

ADDENDUM 2

TO

STARSHIP 1 AVIONICS SYSTEM

SYSTEM MANUAL

PART NUMBER 523-0774076, DATED 14 JAN 1989

Insert this addendum sheet facing page 4-157 of the Theory of Operation Section of the manual

The port B (high) connection at the CAD-870 should be pin P1-39 (not P1-38).

and coded trigger pulses, which are applied to the modulator. The ENCODE GATE ENABLE output is a logic level used to indicate transmit mode; this transmit logic is applied to various circuits in the TDR. The reply output from the encoder consists of pulses spaced according to the reply code format; this is applied to the input of the modulator. The modulator is enabled by ENCODE GATE ENABLE logic from the encoder and selection of ON (not STANDBY) mode. The modulator converts the trigger pulse input to the 69-volt levels required to drive the transmitter.

The transmitter converts the modulator output into an amplified 1090-MHz rf reply pulse train. This reply signal is a series of pulses, the number of which is determined by the ATC code value set by the RTU (plus a trailing IDENT pulse, if selected). This coded (mode A or C) transmit signal is applied through an isolating diplexer and out to the antenna. The diplexer isolates the receiver from the antenna in transmit mode. Note that when the TDR is transmitting a reply, ENCODE GATE ENABLE logic causes the monitor circuit to generate a 1-second pulse. This pulse grounds the XPNDR REPLY output (pin 17) to the CAD.

A suppression amplifier prevents possible damage to other L-band receivers on the aircraft. This amplifier generates a blanking pulse SUPRN output when the encoder produces a transmit reply (ENCODE GATE ENABLE logic); this pulse momentarily inhibits the receiver in the TDR and in both DME's (in the NS system). These three units also generate a blanking pulse output when preparing to transmit, which temporarily inhibits the receiver in the TDR. The blanking pulse input causes the INT SUPPRESSION line to disable the encoder (through the decoder).

The TDR receives various discrete control logic inputs from the CAD. The ON/STBY discrete applies a ground (ON) to enable the TDR modulator (transmit circuit). A 60-second timer provides an initial 1-minute power-up delay to allow the transmitter to warm up.

The MODE SEL C discrete applies a ground to enable the TDR to transmit mode C (altitude) pulses. This discrete and C-DECODE logic from the decoder are AND gated together to provide ALT ENABLE mode selection (C or A logic) to the encoder interface matrix.

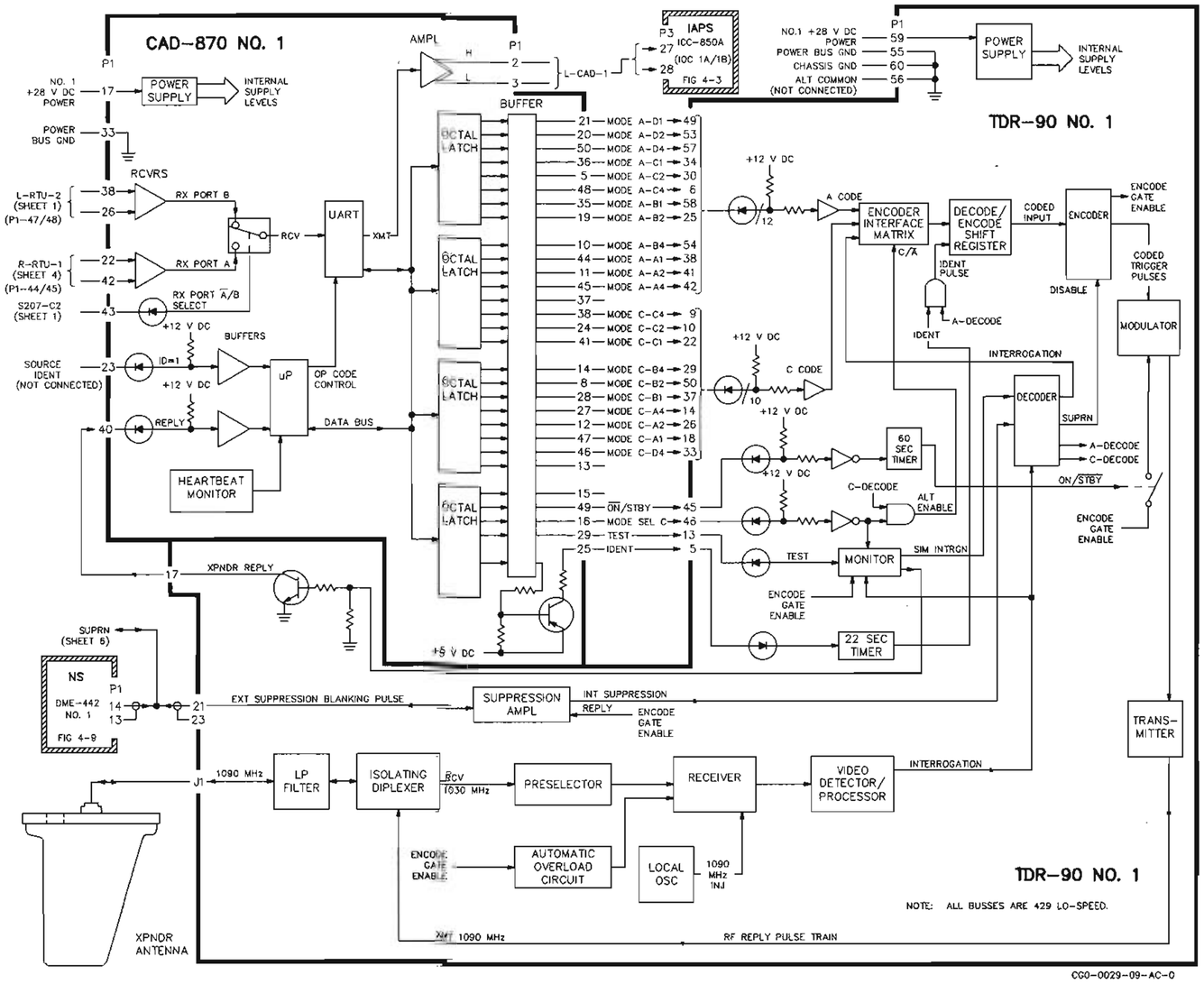

CS System Schematic
Figure 4-8-1 (Sheet 3 of 6)

The TEST discrete applies a ground to initiate the mode A or mode C transponder test function. The TEST discrete, inverted MODE SEL C logic, ENCODE GATE ENABLE (transmit mode) logic, and detected INTERROGATION signal are input to a monitor circuit. If an interrogation signal is not currently being received, the TDR is not transmitting, and test mode is requested, then a simulated mode A or mode C interrogation signal is applied to the decoder. If the TDR responds with a normal reply transmission, the monitor applies a 1-second pulse output. This pulse switches on a transistor to apply a ground "reply" output to the CAD.

The IDENT discrete applies a +5-V dc current source output to a 22-second timer. The timer output is AND gated with A-DECODE logic from the decoder to apply IDENT PULSE coding onto the encoder input. This generates an identification pulse in each reply pulse-train output for at least a 22-second interval.

Refer to figure 4-8-1, sheet 4. This sheet shows the no. 2 RTU-870A radio tuning unit and the (right) 2 RTU reversion switch.

The no. 2 RTU is a centralized controller that is used primarily by the copilot to tune the right side COM and NAV radios. Internal RTU operation is described on a previous page.

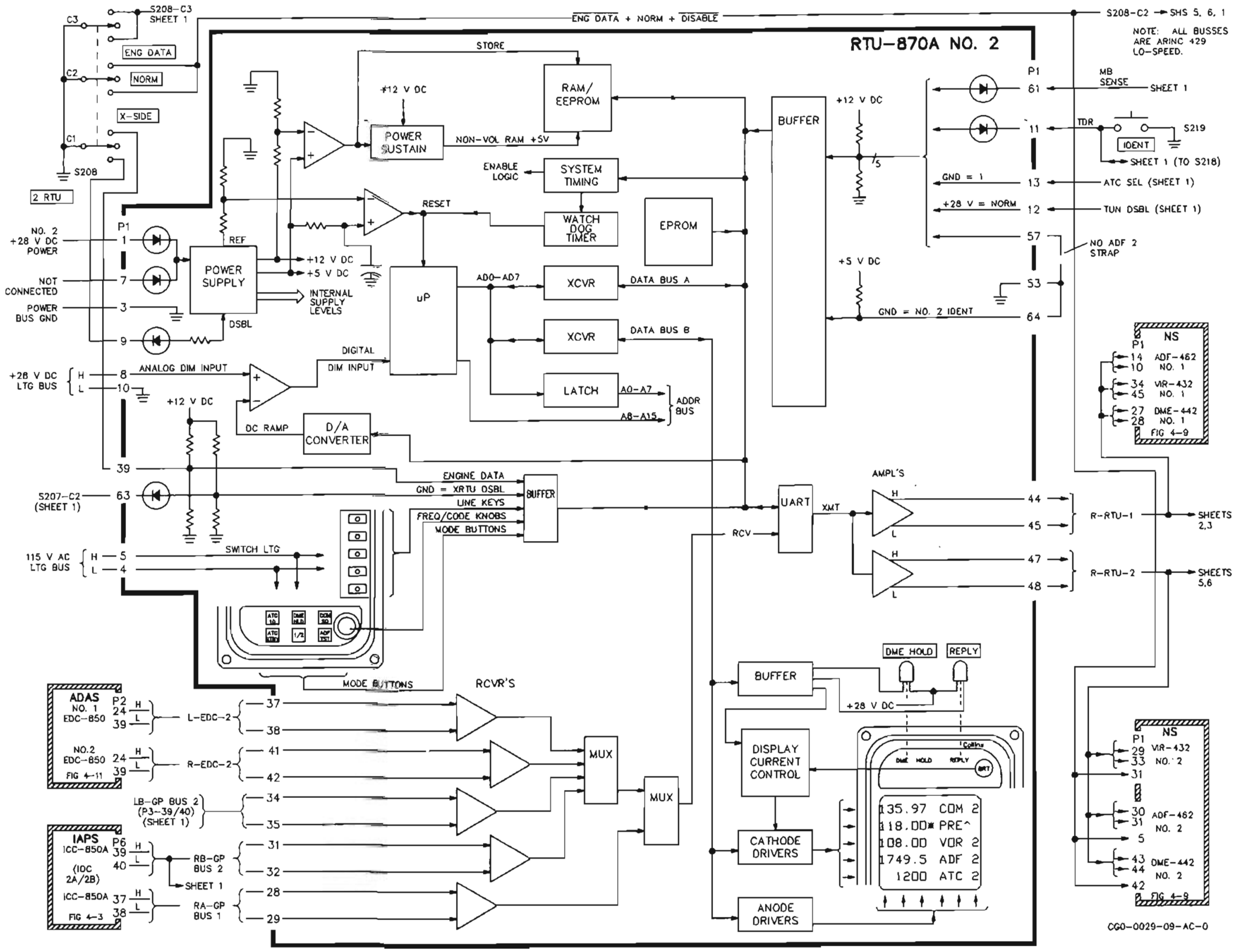

CS System Schematic
Figure 4-8-1 (Sheet 4 of 6)

Refer to figure 4-8-1, sheet 5. The no. 2 VHF-422A is a multichannel COM transceiver that provides copilot side 2-way AM voice communications. The VHF normally is tuned by the right RTU, but also may be tuned by the left RTU. Internal VHF operation is described on a previous page.

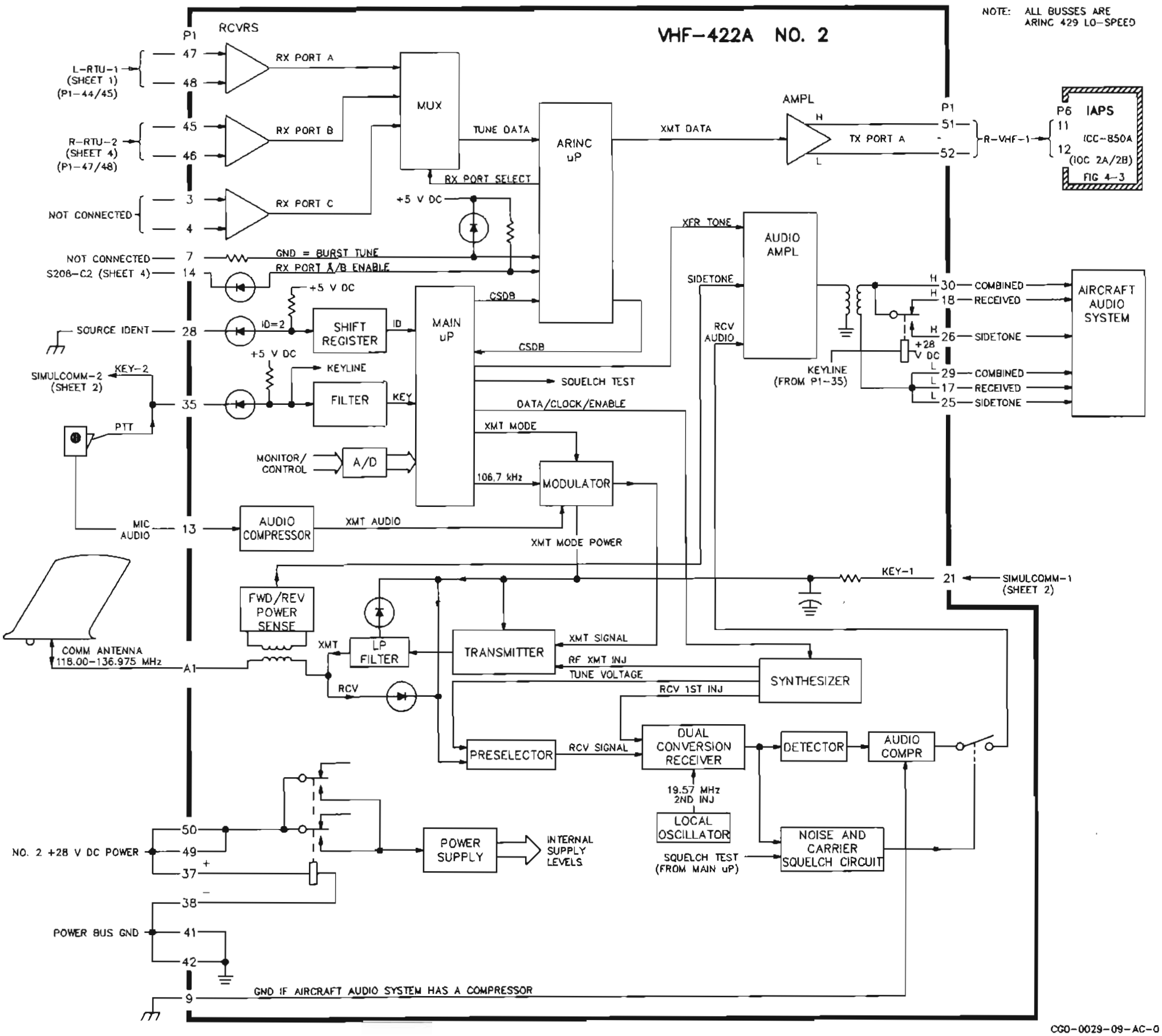

CS System Schematic
Figure 4-8-1 (Sheet 5 of 6)

Refer to figure 4-8-1, sheet 6. The no. 2 CAD-870 converts ARINC 429 low-speed ATC reply code and altitude data into discrete mode A and mode C parallel data for the no. 2 TDR-90. The TDR automatically replies to ground controller interrogations with coded identification and altitude transmissions. Control code and mode selection data normally is applied by the right RTU, but also may be applied by the left RTU. Internal CAD and TDR operation is described on a previous page.

ADDENDUM 2

TO

STARSHIP 1 AVIONICS SYSTEM

SYSTEM MANUAL

PART NUMBER 523-0774076, DATED 14 JAN 1989

Insert this addendum sheet facing page 4-163 of the Theory of Operation Section of the manual

The port B (high) connection at the CAD-870 should be pin P1-39 (not P1-38).

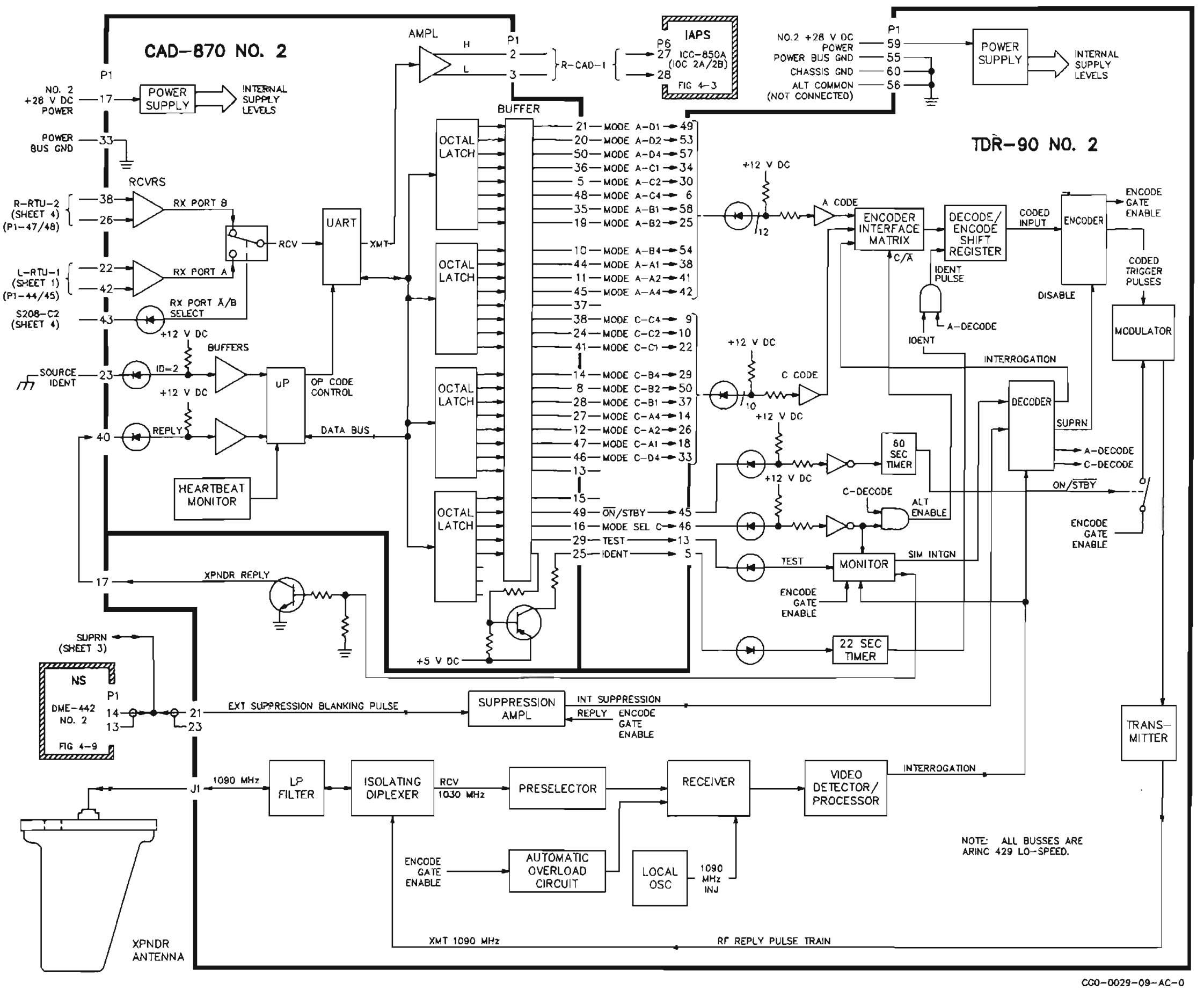

CS System Schematic
Figure 4-8-1 (Sheet 6 of 6)

This page intentionally left blank.

4.3.8 NS (Navigation System)

4.3.8.1 Overview

The NS contains a dual set of VHF radios, a radio altimeter, and a VLF receiver. The VHF radios form a dual system; the no. 1 (pilot side) system is identical to the no. 2 (copilot) system. The entire NS system consists of two VHF navigation receivers, two DME transceivers, two ADF receivers, an ADF antenna, a radio altimeter transceiver, two radio altimeter antennas, a radio altimeter converter, a VLF/Omega navigation receiver, and a VLF/Omega antenna coupler. Refer to figure 4-9. Each LRU is described below:

VIR-432 No. 1 VHF Navigation Receiver
DME-442 No. 1 DME Transceiver
ADF-462 No. 1 ADF Receiver
VIR-432 No. 2 VHF Navigation Receiver
DME-442 No. 2 DME Transceiver
ADF-462 No. 2 ADF Receiver (optional)
ANT-462A/B ADF Antenna
ALT-55B Radio Altimeter
ANT-52 Radio Altimeter (Transmit) Antenna
ANT-52 Radio Altimeter (Receive) Antenna
RAC-870 Radio Altitude Converter
CMA-764 VLF/Omega Receiver
VLF-ANT Antenna Coupler

The no. 1 VIR-432 is a VHF navigation receiver performing VOR/LOC, glideslope (GS), and marker beacon (MB) functions. The VIR-432 is normally tuned by the left RTU-870A, but also may be tuned by the right RTU or by the IAPS system (in burst mode). The VOR/LOC and MB audio outputs are applied to the aircraft audio system, and digital bus outputs are applied to the IAPS and the IDS systems. This digital output contains the NAV frequency (which is echoed back to the RTU's) and processed NAV data (which is displayed on selected crt's).

The no. 1 DME-442 is a 3-channel distance measuring equipment. The DME-442 normally is tuned by the left RTU-870A, but also may be tuned by the right RTU. The DME audio output is applied to the aircraft audio system, and digital bus outputs are applied to the IAPS and the IDS systems. This digital output contains the DME frequency (which is echoed back to the RTU's) and processed DME data (which is displayed on selected crt's).

The no. 1 ADF-462 is a low-frequency automatic direction finder. The ADF-462 normally is tuned by the left RTU-870A, but also may be tuned by the right RTU. The ADF audio output is applied to the aircraft audio system, and digital bus outputs are applied to the IAPS and the IDS systems. This digital output contains the ADF frequency (which is echoed back to the RTU's) and processed ADF bearing (which is displayed on selected crt's).

The no. 2 VIR-432 is a VHF navigation receiver performing VOR/LOC, GS, and MB functions. The VIR-432 normally is tuned by the right RTU-870A, but also may be tuned by the left RTU. The VOR/LOC and MB audio outputs are applied to the aircraft audio system, and digital bus outputs are applied to the IAPS and the IDS systems. This digital output contains the NAV frequency (which is echoed back to the RTU's) and processed NAV data (which is displayed on selected crt's).

The no. 2 DME-442 is a 3-channel distance measuring equipment. The DME-442 normally is tuned by the right RTU-870A, but also may be tuned by the left RTU. The DME audio output is applied to the aircraft audio system, and digital bus outputs are applied to the IAPS and the IDS systems. This digital output contains the DME frequency (which is echoed back to the RTU's) and processed DME data (which is displayed on selected crt's).

The no. 2 ADF-462 is an optional low-frequency automatic direction finder. The ADF-462 normally is tuned by the right RTU-870A, but also may be tuned by the left RTU. The ADF audio output is applied to the aircraft audio system, and digital bus outputs are applied to the IAPS and the IDS systems. This digital output contains the ADF frequency (which is echoed back to the RTU's) and processed ADF bearing (which is displayed on selected crt's).

The ANT-462A is a single antenna that provides rf input to the no. 1 ADF-462 if the optional no. 2 ADF-462 is not installed. The ANT-462B is a dual antenna that provides rf input to both ADF-462 receivers when two are installed. Either the ANT-462A or the ANT-462B antenna (never both) is installed in the aircraft.

The ALT-55B is a swept FMCW altimeter that measures aircraft altitude. The ALT-55B transmits a reference signal on an ANT-52 antenna, receives the reflected signal on another ANT-52 antenna, and compares the two signals to determine the aircraft altitude. The dc altitude output is converted to ARINC 429 format by the RAC-870 and applied to the IAPS system. The altitude awareness panels in the FMS system provide a TEST discrete, which is

applied through the RAC-870 to initiate self-test operation in the ALT-55B.

The CMA-764 is a VLF and Omega receiver. The CMA-764 normally is controlled by the left IAPS, but also may be controlled by the right IAPS. Tune data is input through the IAPS by the CDU-850A's. Digital bus outputs are applied to the IAPS and the IDS systems. This digital output contains processed VLF/Omega, flight plan, and position data. The VLF-ANT is an E-field antenna coupler which provides received input signals to the CMA-764.

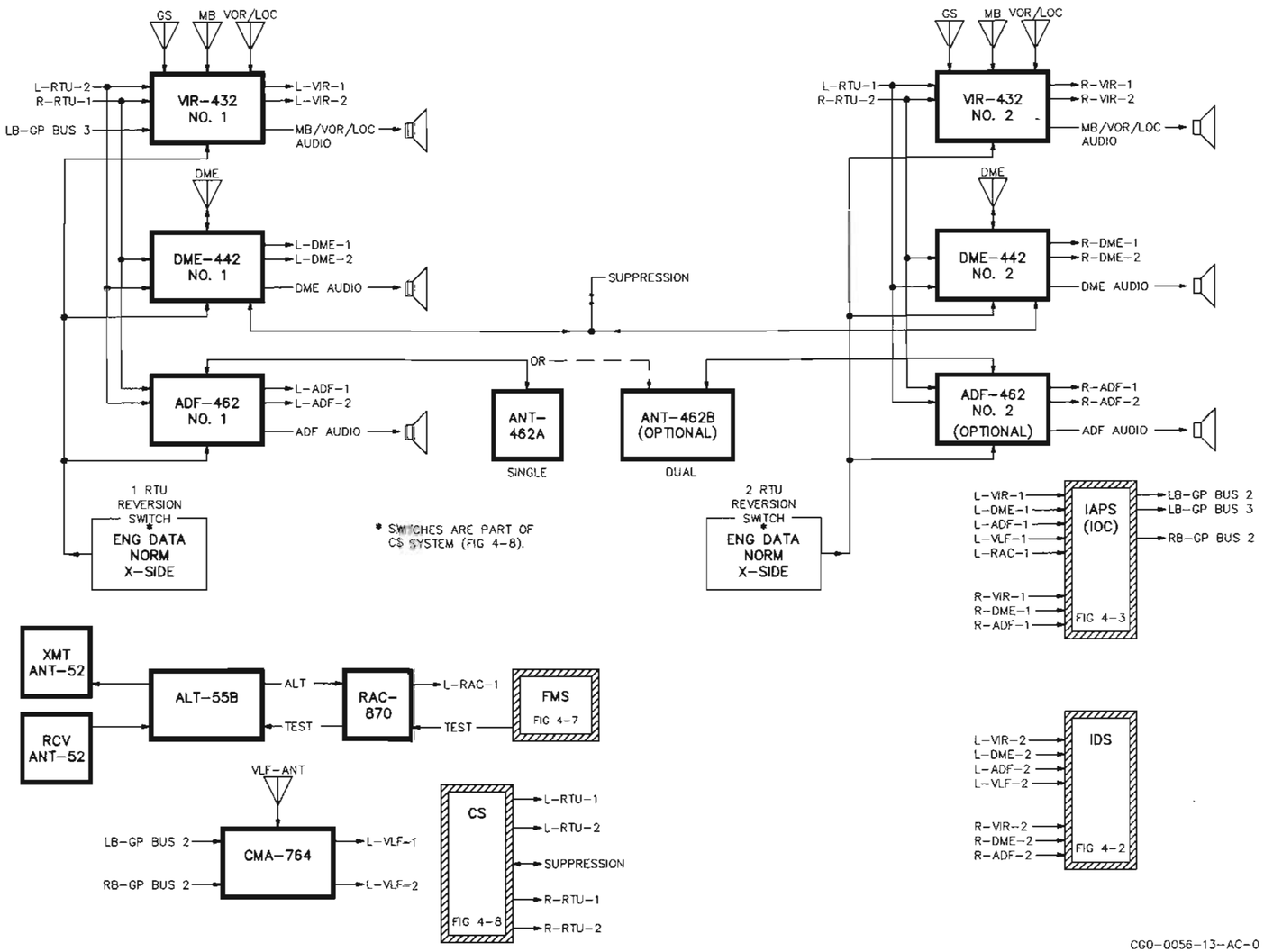

NS (Navigation System) Overview
Figure 4-9

4.3.8.2 System Schematic

The NS provides VHF navigation (dual), radio altimeter, and VLF/Omega navigation functions. Refer to figure 4-9-1, sheet 1. This sheet shows the no. 1 VIR-432 VHF navigation receiver.

The VIR consists of an ARINC microprocessor, an instrumentation microprocessor, a VOR/LOC receiver, a glideslope receiver, a marker beacon receiver, and two audio amplifiers. Operating power is provided by the no. 1 +28-V dc aircraft supply; an internal power supply converts this voltage into required supply levels.

The ARINC microprocessor selects and reads one of three tune data bus inputs, supplies tune data to the instrumentation microprocessor, and formats ARINC 429 output data. Three ARINC 429 low-speed data buses are received and input to a multiplexer. The R-RTU-1 bus brings tune data from the right RTU, the L-RTU-2 bus brings tune data from the left RTU, and the LB-GP BUS 3 bus brings tune data from the IAPS. The processor reads latched BURST TUNE and RX PORT A/B ENBL discretes from the left RTU reversionary switch (S207 in the CS system) and selects the active tune port. The multiplexer then supplies tune data from the selected input port through a UART to the ARINC processor. Normally, port B is selected and the VIR is tuned by the left RTU. When the left RTU reversion switch is set to ENG DATA or to X-SIDE, a ground is applied to P1-31, which selects port A (right RTU) tune data. When both left and right RTU reversionary switches are set to either ENG DATA or X-SIDE, a ground is applied to P2-8, which selects port C (IAPS) burst tune data. The ARINC microprocessor supplies the selected tune data (in CSDB format) to the instrumentation microprocessor.

The instrumentation microprocessor controls the receiver and the data processor functions. This processor reads selected tune (ARINC RCV) data, source ident, and decoded receive data parameters. The processor generates CSDB data, a TEST tone, and synthesizer data/clock/enable.

The selected tune input data is read directly in CSDB format and used to program the VOR/LOC and GS frequency synthesizers. The source ident is read onto the data bus through a latch; the ident strap (P1-14) is open for the no. 1 VIR. Decoded VOR (30-Hz REF and 30-Hz VAR), LOC, and GS signals are sampled onto the data bus by the processor through an a/d converter. Decoded MB status is read onto the data bus by the processor through a latch.

Processed CSDB output data is applied to the ARINC processor. The ARINC processor applies this data to the ARINC UART, where it is transmitted on the L-VIR-1 bus to the IAPS and the L-VIR-2 bus to the IDS. These data bus outputs contain the tuned VOR/LOC frequency, VOR bearing, LOC deviation, GS deviation, and MB status information. A 30-Hz TEST tone output is generated by the processor when self-test mode is requested; this tone is monitored through the a/d converter. Data, clock, and enable outputs are generated and applied as tune frequency program inputs to both the VOR/LOC and the GS LSI frequency synthesizers.

The VOR/LOC receiver is a dual conversion receiver that demodulates the VOR or LOC signal from the 108.00- to 117.95-MHz band and applies detected signal to the instrumentation processor and isolated audio to the aircraft audio system.

The rf input signal from the VOR/LOC antenna is applied through a preselector to the dual conversion receiver. The 2-pole preselector provides rf selectivity and is continuously tuned by a dc TUNE VOLTAGE from the synthesizer. The synthesizer is programmed by the instrumentation processor to apply dc TUNE VOLTAGE to the preselector and a variable first injection frequency to the receiver. These outputs are related directly to the tune frequency and channel the receiver to the desired station.

A crystal oscillator provides the second (fixed) injection frequency to the receiver. The resulting if signal is applied to a diode detector and to an automatic frequency control (AFC) circuit. The AFC circuit functions only in VOR (not ILS) mode. This circuit keeps the received signal in the center of the passband to compensate for VOR station drift. An AFC TUNE output provides a dc error correction voltage to fine-tune the synthesizer. A MUTE logic output opens the path of the detected signal if the AFC error becomes excessive. The detected VOR or LOC signal is applied to an FM discriminator and through the NAV audio amplifier to the aircraft audio system.

The FM discriminator processes the detected analog VOR/LOC signal into components expected by the microprocessor. In VOR mode, the FM discriminator derives 30-Hz reference and 30-Hz variable phase signals from the detected VOR signal. These signals

maintain a phase relationship used to calculate the VOR bearing. In ILS mode, the FM discriminator derives a standard 90/150-Hz localizer signal from the detected LOC signal. This signal represents left or right deviation from the localizer beam. These LOC, 30-Hz REF, and 30-Hz VAR signals are applied to a multiplexer and sampled through an analog-to-digital converter onto the processor data bus.

The glideslope receiver is a dual conversion receiver that demodulates the GS signal from the 329.15- to 335.00-MHz band and applies the detected signal to the instrumentation processor. The GS frequency is paired with the localizer frequency selected on the control unit.

The rf input signal from the GS antenna is applied through a 3-pole bandpass filter to the dual conversion receiver. The GS synthesizer is programmed by the instrumentation processor to apply the variable first injection frequency to the receiver. This frequency is related directly to tune frequency and channels the receiver to the desired station.

A crystal oscillator provides the second (fixed) injection frequency to the receiver. The resulting if signal is applied to a transistor detector. The detected 90/150-Hz GS signal is amplified, applied to a multiplexer, and sampled through an analog-to-digital converter onto the processor data bus. This signal represents up or down deviation from the glideslope beam.

The marker beacon receiver is a single-channel tuned rf receiver. The MB receiver amplifies and demodulates the received 75-MHz signal and applies detected signal to the instrumentation processor and audio to the aircraft audio system.

The 75-MHz input signal from the MB antenna is applied through a crystal bandpass filter to a 2-stage rf amplifier. The crystal filter provides receiver selectivity. High or low sensitivity threshold is enabled according to decoded input tune data; sensitivity control is selected by the MKR BCN switch in the CS system. The amplified signal is demodulated by a diode detector, amplified, and applied to a filter/amplifier network and through the MB audio amplifier to the aircraft audio system.

The filter/amplifier network contains three tuned circuits. These circuits sense the 400-, 1300-, and 3000-Hz tone components of the detected signal. Corresponding outer, middle, and inner marker beacon discrete outputs are generated and applied to a latch. These discretes are read from the latch onto the processor data bus.

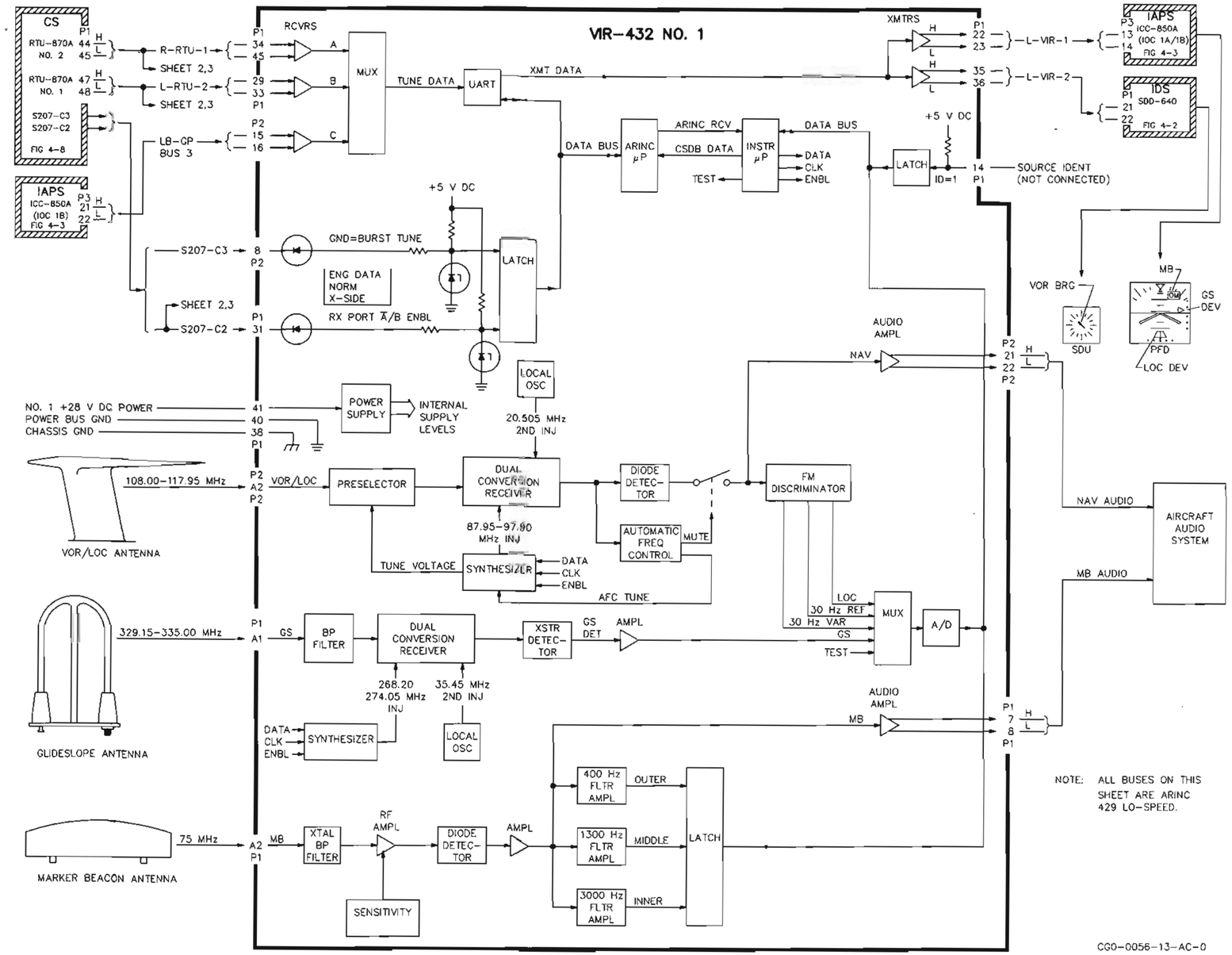

NS System Schematic
Figure 4-9-1 (Sheet 1 of 9)

Refer to figure 4-9-1, sheet 2. This sheet shows the no. 1 DME-442 distance measuring equipment. The DME is a 3-channel transceiver that measures slant range (line of sight) distance from the aircraft to a ground station, computes relative closure rate and time to station, and decodes the station identifier.

The DME consists of an ARINC UART, a microprocessor, a transmitter, a receiver, and an audio circuit. Operating power is provided by the no. 1 +28-V dc aircraft supply; an internal power supply converts this voltage into required supply levels.

An ARINC UART controls the ARINC 429 low-speed I/O interface. Two ARINC 429 low-speed data buses are received and input to a multiplexer. The R-RTU-1 bus brings tune data from the right RTU, and the L-RTU-2 bus brings tune data from the left RTU. The microprocessor reads the RX PORT A/B ENBL discrete from the left RTU reversionary switch (S207 in the CS system) and selects the active tune port. The multiplexer then supplies TUNE DATA from the selected input port through the UART to the microprocessor. Normally, port B is selected and the DME is tuned by the left RTU. When the left RTU reversionary switch is set to ENG DATA or to X-SIDE, a ground is applied to P1-42, which selects port A (right RTU) tune data.

The microprocessor controls the receiver, transmitter, and the data processor functions. This processor reads selected tune data, source ident, decoded receive data, and monitor parameters. The selected tune data input is read through the ARINC UART and used to properly channel the transmitter and the receiver. The source ident strap input is buffered onto the data bus; the ident strap (P1-9) is open for the no. 1 DME. Received (reply) data is decoded and stored in CHANNEL RAM. Monitors from the power supply (PS MON), the modulator (XMT MON), and the synthesizer (SMO MON) are read from a latch onto the data buffer bus.

Processed DME output data is applied from the microprocessor to the ARINC UART, where it is transmitted on the L-DME-1 bus to the IAPS and the L-DME-2 bus to the IDS. These data bus outputs contain the tuned DME frequency, distance to the station, time to go, and ground speed calculations.

A timing circuit resets the microprocessor if program execution time becomes excessive; the reset ensures that the processor is not hung up in an endless loop. A data transceiver provides interface between the AD0-AD7 microprocessor data bus and the data buffer bus used for internal communication. A latch decodes address to the CHANNEL RAM memory; this memory stores signal presence, AGC, and receiver tune data for the one or two channels that are not being processed currently.

The transmitter circuit consists of a modulator, a digital synthesizer, and a power amplifier. After the processor determines that a DME ground station is in range, pairs of P1/P2 framing pulses are generated and applied onto the data buffer bus. These pulses initiate the transmit mode. These framing pulses are decoded and applied to the XMT modulator. The modulator provides pulsed drive bias to the power amplifier.

The digital synthesizer originates the CW frequency used to drive the power amplifier. The processor programs the synthesizer with the tune frequency using data, clock, and enable lines decoded from the data buffer bus. The synthesizer generates a dc control voltage to the vco. This dc level tunes the vco to apply the proper CW interrogation frequency to the power amplifier. The vco also supplies VAR FREQ feedback to the synthesizer, which is compared with a fixed REF frequency to provide error correction.

The power amplifier chops the CW interrogation frequency using pulse drive bias from the modulator. The resulting 1025- to 1150-MHz pulse pair output is amplified to a 300-watt level (at the antenna). This L-band interrogation output is transmitted through an isolating diplexer and low-pass filter to the DME antenna. The diplexer is a PIN diode circuit which is forward biased in transmit mode; this isolates the antenna from the receiver circuits.

A suppression circuit prevents possible damage to other L-band receivers on the aircraft when the DME is transmitting. This circuit generates a blanking pulse SUPRN output when INT SUPRN data from the processor is set (transmit mode). This momentarily inhibits the receiver in the right DME and in both TDR's (in the CS system). These three units also generate a blanking pulse output when transmitting, which temporarily inhibits the DME receiver.

The receiver circuit consists of a preselector, a mixer, and a video detector. When the ground station transmits a reply pulse pair, this 962- to 1213-MHz L-band signal is applied from the antenna through a low-pass filter and isolating diplexer to the preselector. The diplexer PIN diode is reverse biased in receive

mode to isolate the antenna from the transmitter circuits.

The preselector is a 5-pole bandpass filter that tracks the received (reply) frequency using a dc tune voltage. The processor applies dc tune control through a d/a converter and a tune amplifier to the preselector. This dc tune voltage (TRACK-TUNE VOLTS) channels the receiver to the selected station. When test mode is selected, a discrete is decoded from the data buffer bus and applied to a noise generator; the resulting signal is gated into the preselector input.

The filtered preselector output is applied to the mixer along with the LO INJ frequency from the transmitter. The mixer produces a 63-MHz difference (transmit-receive) frequency. This if frequency is amplified and applied to a video detector, a signal presence detector, and an AGC sample circuit.

The video detector applies the detected reply signal to a video processor. The video processor decodes the detected video pulses and then performs a validity check. If the pulses are properly spaced and have correct relative amplitudes, the video processor interrupts the microprocessor to indicate reception of a valid reply. The microprocessor then begins DME computation routines.

The DME uses stored values from the signal presence detector, the AGC sample circuits, and the d/a converter (receiver tune voltage) to cycle operation between three different channels. The microprocessor sequentially reads these three values through a storage multiplexer circuit and a differential comparator. These A/D COMP results are read onto the data buffer bus through a latch and stored in CHANNEL RAM memory. After these results are stored, the processor begins operation at the next channel; the DME cycles to the next station approximately every 37 ms. When called by the processor, the three stored values then are read sequentially from memory, used to retune the receiver, and updated in the storage multiplexer circuit.

The microprocessor determines if there is an audio IDENT in the reply signal. If an IDENT is detected, the output is gated to an audio decoder. The Morse code station identifier is then decoded from the bus and applied through an amplifier to the aircraft audio system.

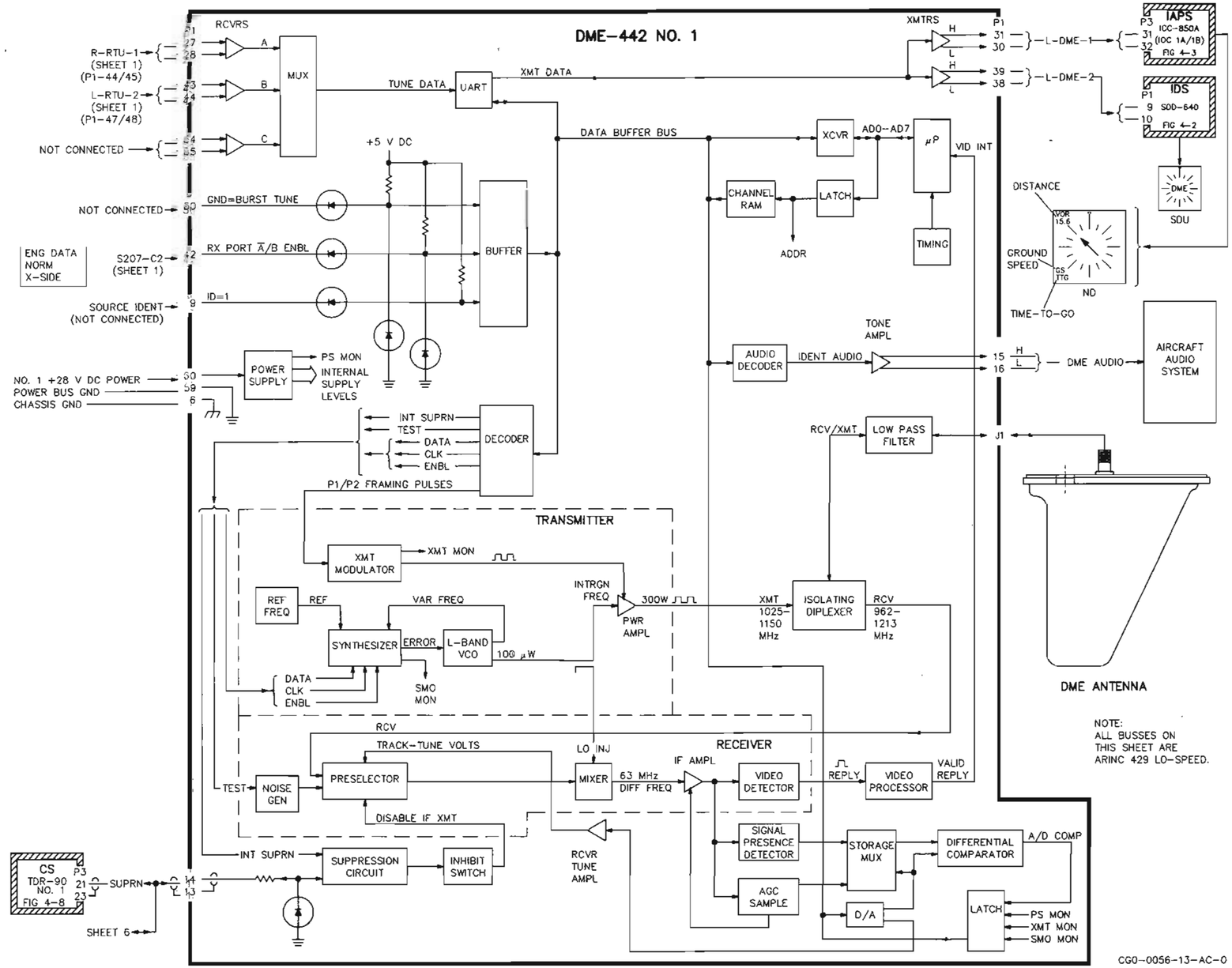

NS System Schematic
Figure 4-9-1 (Sheet 2 of 9)

Refer to figure 4-9-1, sheet 3. This sheet shows the no. 1 ADF-462 automatic direction finder. The ADF is a low/medium-frequency radio receiver that provides computed bearing to the tuned station and an audio output.

The ADF consists of an I/O microprocessor that controls the I/O interface, an instrumentation microprocessor that performs the ADF computations, an rf receiver, and an antenna switching circuit. Operating power is provided by the no. 1 +28-V dc aircraft supply; an internal power supply converts this voltage into required supply levels.

The I/O microprocessor manages an ARINC UART, a discrete input buffer, and control/decoder circuits. The ARINC UART controls the ARINC 429 low-speed I/O interface. Two ARINC 429 low-speed data buses are received and input to a multiplexer. The R-RTU-1 bus brings tune data from the right RTU and the L-RTU-2 bus brings tune data from the left RTU. The processor reads the RX PORT A/B ENBL discrete from the left RTU reversionary switch (S207 in the CS system) and selects the active tune port. Normally, port B is selected and the ADF is tuned by the left RTU. When the left RTU reversionary switch is set to ENG DATA or to X-SIDE, a ground is applied to P1-5, which selects port A (right RTU) tune data. The multiplexer then supplies TUNE DATA from the selected input port through the UART to the microprocessor.

The discrete input buffer circuit is used to load RX PORT A/B ENBL (previously described), SOURCE IDENT strap (open for the no. 1 ADF), ANTENNA LOCATION strap (top or bottom mount), and QEC straps (quadrantal error correction) information onto one of the I/O processor data buses.

Decoder circuits convert microprocessor generated data into controls applied to the receiver circuits. After the processor reads the tune frequency from the selected input data bus, appropriate DATA/CLK/ENBL synthesizer programming, MUTE logic, and BAND LOGIC control is generated. These decoded controls are described in a later paragraph. A control circuit decodes individual chip selects.

The instrumentation microprocessor performs bearing calculations and controls the antenna interface. A data transceiver circuit provides data exchange between the two microprocessors. Processed ADF bearing data is applied through the transceivers to the I/O processor. Bearing (and tune frequency) information is then applied from the I/O microprocessor to the ARINC UART, where it is transmitted on the L-ADF-1 bus to the IAPS and the L-ADF-2 bus to the IDS.

The ADF dual conversion receiver demodulates the rf input signal from the 190- to 1799-kHz band and applies detected signal to the instrumentation processor and processed audio to the aircraft audio system.

The rf input signal from the ANT-462A/B is applied through one of six bandpass filters to the receiver input. The I/O processor reads the tune frequency input and then generates BAND LOGIC, which switches the appropriate bandpass filter to the rf signal path.

The receiver is tuned by an LSI synthesizer. The synthesizer is programmed (DATA/CLK/ENBL) by the I/O processor to apply the variable first injection frequency to the receiver. This frequency is related directly to tune frequency and channels the receiver to the desired station. A crystal oscillator provides the second (fixed) injection frequency to the receiver. The resulting 3.6-MHz if signal is applied to a phase-locked loop coherent detector.

The coherent detector is a frequency and phase detector that produces valid LOCK logic and AUDIO output signals when phase locked to the input 3.6-MHz if signal. The detector flags the processor (invalid LOCK logic) and blocks the AUDIO if the receive signal becomes unusable (detector unlocks).

The LOCK output is monitored through a multiplexer by the instrumentation processor. This output is a +12-V dc level when the detector is phase locked to the input signal and a ground level when unlocked. The AUDIO output is applied through a low-pass filter to the instrumentation processor and to the audio circuits. The instrumentation processor uses this detected audio to compute bearing to the station.

The detected audio from the coherent detector and a BFO audio signal are combined and applied through a mute switch to the audio amplifier. The BFO audio is a 1-kHz tone that identifies keyed carrier CW stations; this tone is decoded by the instrumentation processor only when BFO mode is selected on the RTU control. The mute switch is controlled by a MUTE pulse which is decoded from the I/O processor bus. This pulse turns off the audio output during a frequency (channel) change. Normally, the mute

switch is closed and the audio signal is filtered, amplified, and applied to the aircraft audio system.

The antenna switching circuit applies modulation and operating power to active circuits in the ANT-462A/B antenna. The ADF receiver uses a null system to determine the bearing of the station relative to the aircraft. The instrumentation processor selects a bearing angle and operates the antenna switching circuit to apply corresponding modulation signal outputs to balanced modulators located in the antenna. The antenna circuits null when the selected bearing is correct. Refer to sheet 4.

A decoder circuit provides processor generated chip control and sync control. A sine table PROM applies a synchronized digital sine wave to both the sin and cos modulation d/a's. The selected bearing angle is decoded from the processor bus and converted into SIN BRG and COS BRG outputs to the modulation d/a's. The resulting sine (includes QEC) and cosine bearing modulation signals are limited and applied to the antenna. Note that these are not constant amplitude signals.

The ADF receiver applies ANT B+ and LOOP B- power outputs to the antenna. The ANT B+ output is a filtered +15-V dc level that is always supplied to the antenna, regardless of selected mode. The LOOP B- output is a filtered -12-V dc level that is switched to the antenna only in ADF mode. In ANT mode, the LOOP B- output is switched off to disable the loop antenna circuits; this results in a clearer audio signal when bearing information is not required.

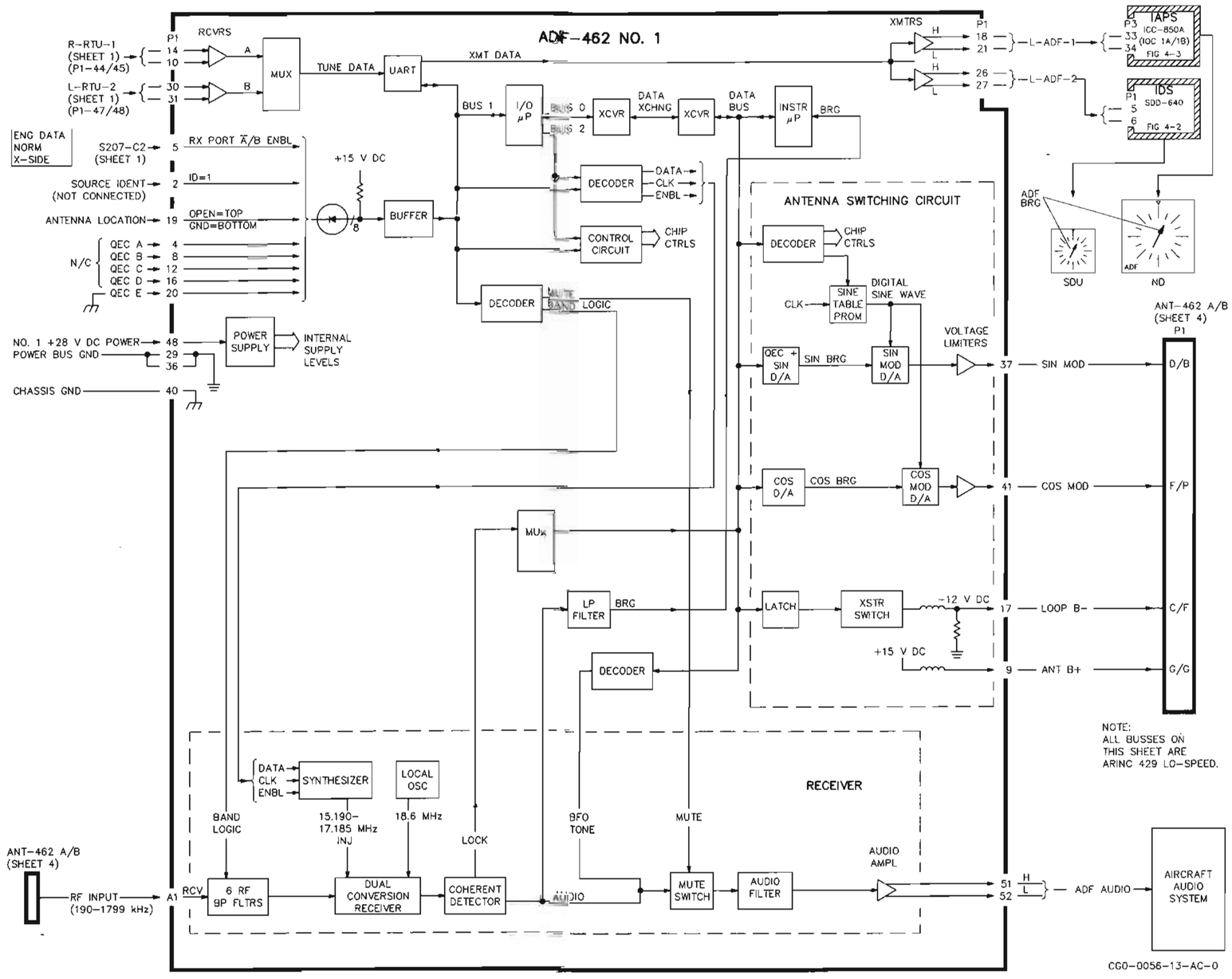

NS System Schematic
Figure 4-9-1 (Sheet 3 of 9)

Refer to figure 4-9-1, sheet 4. This sheet shows the ANT-462A and the ANT-642B antennas. The ANT-462A is used when only one ADF-462 receiver is installed on the aircraft. The ANT-462B is used when two ADF receivers are installed. The ANT-462A/B senses rf signals in the 190- to 1799-kHz band and provides a processed 50-Ω output signal to the ADF receiver(s). The following paragraphs describe the ANT-462A, but also apply to either of the antenna circuits in the ANT-462B.

The ANT-462A consists of a sense antenna, two loop antennas, and an output transformer. Each antenna contains processing circuits which resolve induced voltages into the rf signal output used to measure the arrival direction of the received signal. Processing circuits in the ADF receiver convert these induced voltages into bearing information. Refer to sheet 3.

The sense antenna is an omnidirectional antenna that provides signal reference in ADF mode and AM band radio reception in ANT mode. The sense antenna consists of two independent sections; each section is individually filtered and amplified. This technique provides double signal handling capability without intermodulation. The two amplified sense signals are then combined in a summing transformer, amplified, and applied to the output transformer.

The two loop antennas induce a directional signal. The loop antennas are offset 90° from each other to provide a sine/cosine phase relationship. Each output is applied through a low-noise amplifier to a balanced modulator. The balanced modulators mix the loop antenna signals with the sine and cosine modulation signals from the receiver. These SIN MOD and COS MOD input signals are synchronized representations of a bearing selected by the instrumentation processor in the ADF receiver. The two modulator outputs are then summed together; if the selected bearing is the actual bearing to the station, the sum of the modulator outputs is zero (null). The amplified loop output is applied to the output transformer.

The output transformer combines the sense output from the rf amplifier and the combined loop output from the loop amplifier into a 50-Ω rf output applied to the ADF receiver.

The ADF receiver applies ANT B+ and LOOP B- power inputs to the antenna. The ANT B+ input is a filtered +15-V dc level. The LOOP B- input is a filtered -12-V dc level that is switched to the antenna only in ADF mode. In ANT mode, the LOOP B- output is switched off to disable the loop antenna circuits.

ANT-462A USED IN SINGLE ADF INSTALLATION.

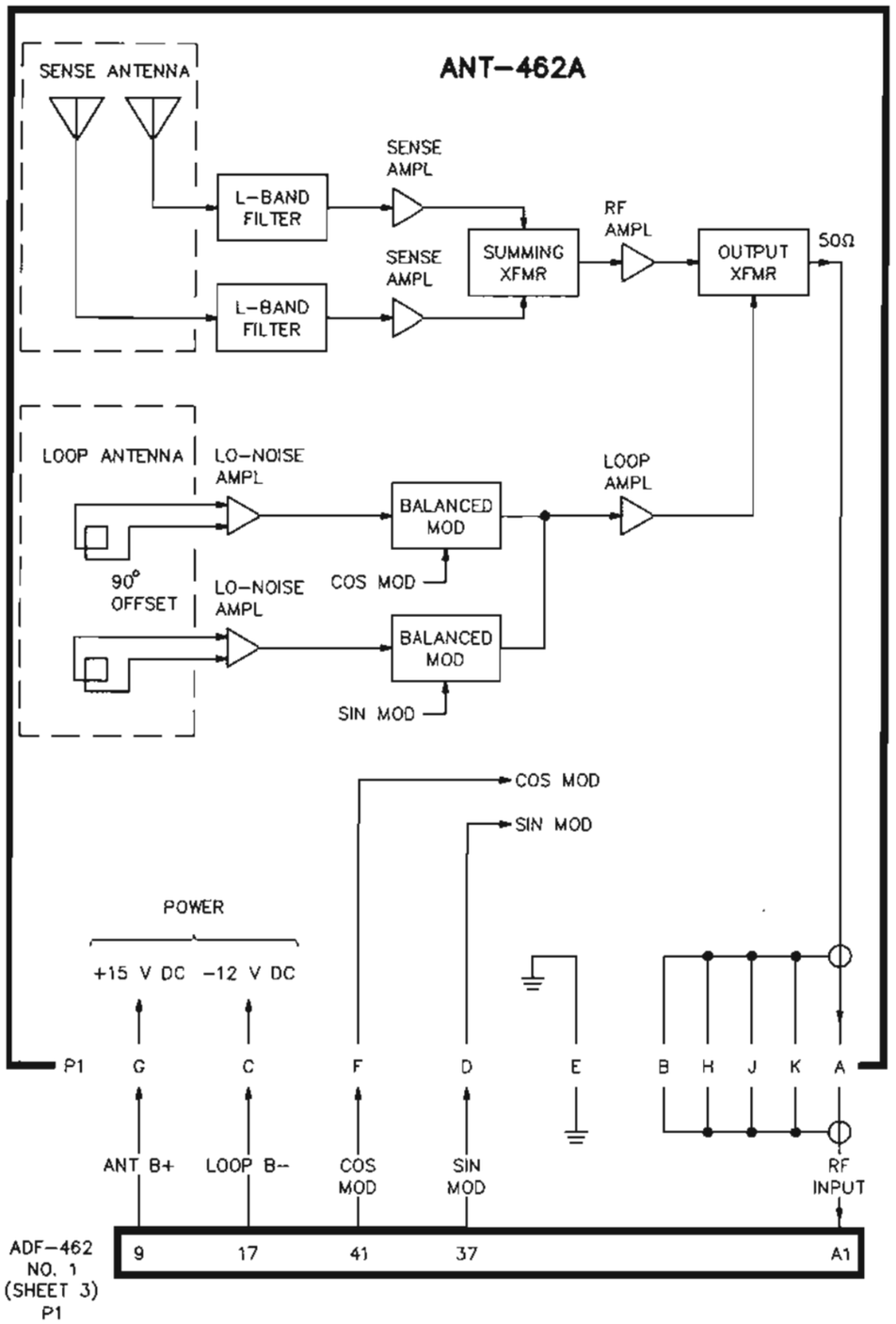

ANT-462B USED IN DUAL ADF INSTALLATION.

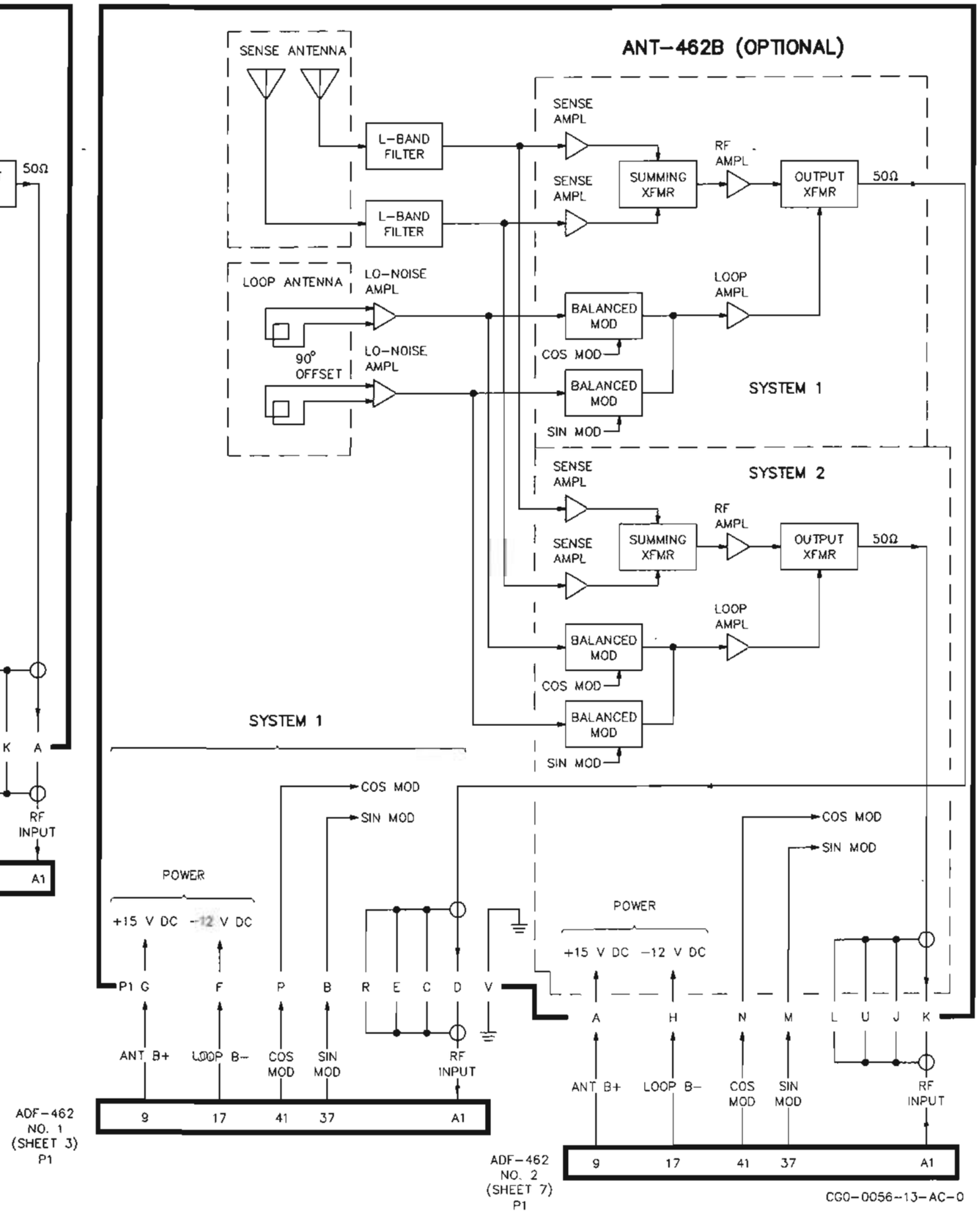

NS System Schematic
Figure 4-9-1 (Sheet 4 of 9)

Refer to figure 4-9-1, sheet 5. This sheet shows the no. 2 VIR-432 VHF navigation receiver. Internal operation of the VIR is described on a previous page.

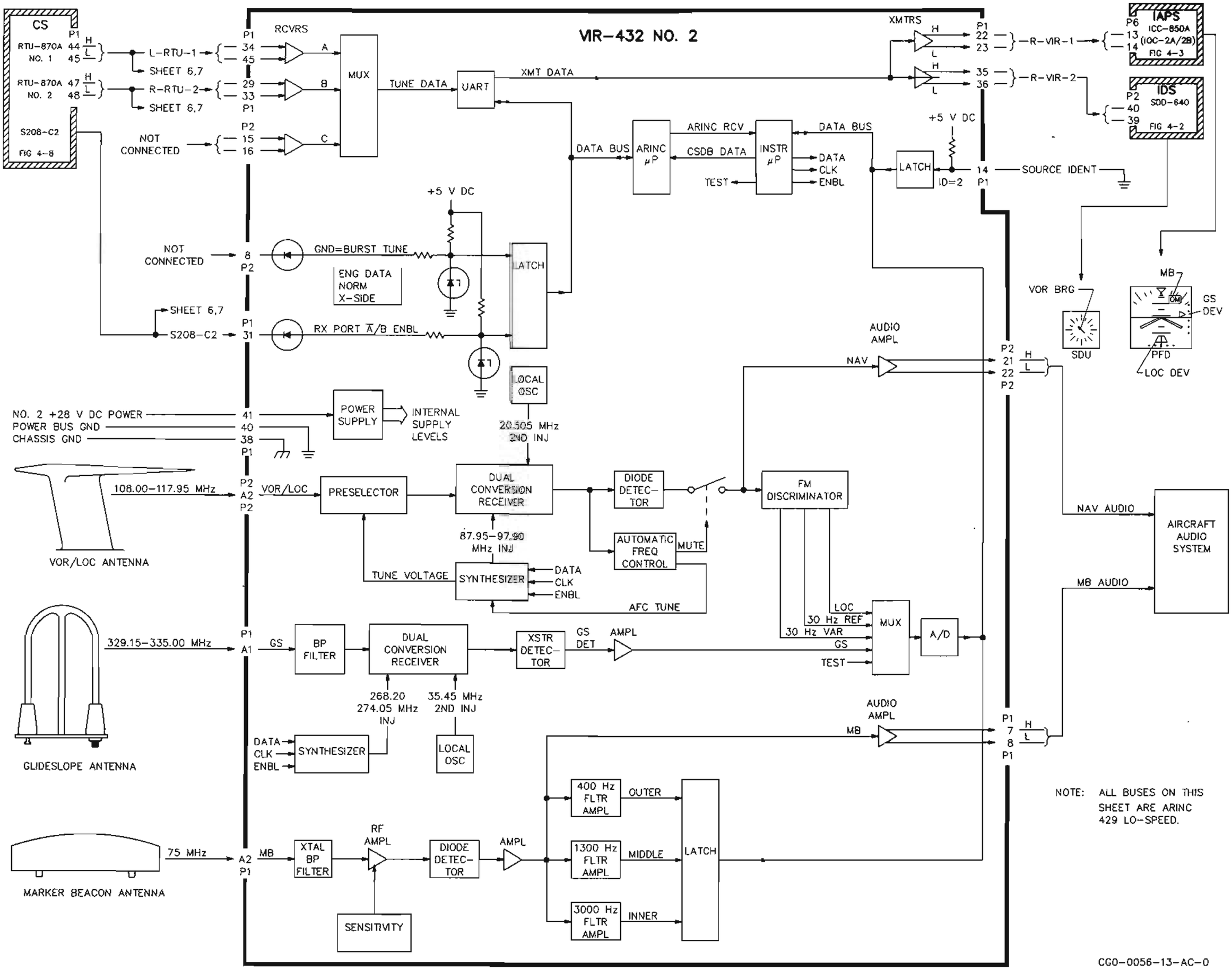

NS System Schematic
Figure 4-9-1 (Sheet 5 of 9)

Refer to figure 4-9-1, sheet 6. This sheet shows the no. 2 DME-442 distance measuring equipment. The DME is a 3-channel transceiver that measures slant range (line of sight) distance from the aircraft to a ground station, computes relative closure rate and time to station, and decodes the station identifier. Internal operation of the DME is described on a previous page.

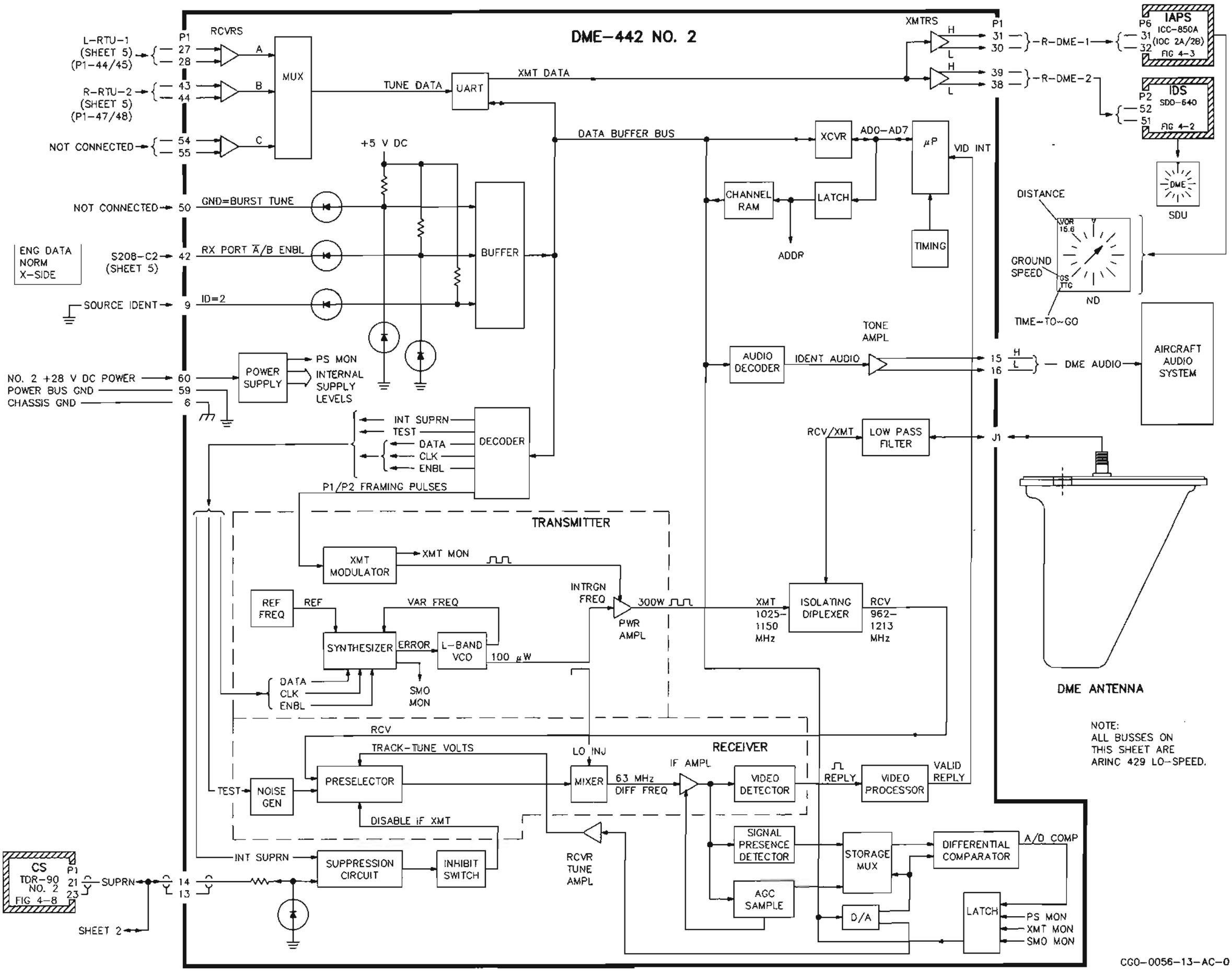

NS System Schematic
Figure 4-9-1 (Sheet 6 of 9)

Refer to figure 4-9-1, sheet 7. This sheet shows the optional no. 2 ADF-462 automatic direction finder. The ADF is a low/medium-frequency radio receiver that provides computed bearing to the tuned station and an audio output. When this unit is installed in the aircraft, the dual ANT-462B (not the ANT-462A) antenna is used. Internal operation of the ADF is described on a previous page.

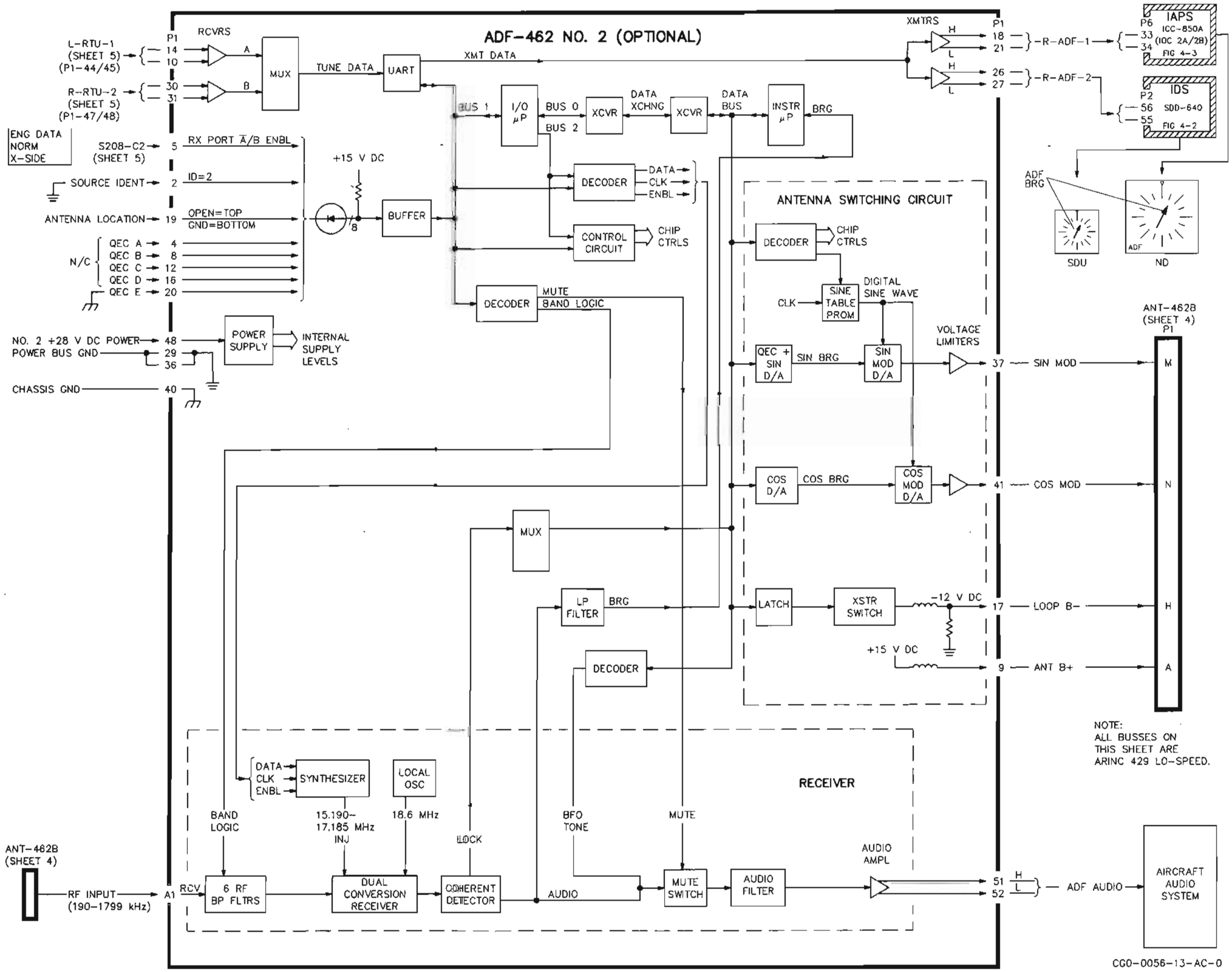

NS System Schematic
Figure 4-9-1 (Sheet 7 of 9)

Refer to figure 4-9-1, sheet 8. This sheet shows the ALT-55B radio altimeter and both ANT-52 antennas. The ALT is an FMCW transceiver that measures the aircraft altitude (up to 2500 feet) above the terrain during approach mode. The ALT transmits a reference signal on one ANT-52 antenna, receives the reflected signal on the other ANT-52 antenna, and then computes the aircraft altitude.

The ALT consists of a transmitter, a mixer, a receiver, and an altitude discriminator. Operating power is provided by the no. 1 +28-V dc aircraft supply; an internal power supply converts this voltage into required supply levels for the ALT and the RAC.

The transmitter generates a 4250- to 4350-MHz swept deviation output to the transmit ANT-52. The transmitter consists of a modulation oscillator, a driver, a multiplier/filter, and a control voltage generator.

The modulation oscillator provides a 100-Hz at 0-degree modulation FM input signal to the driver circuit. Rear connector straps select the 100-Hz (P1-35/38) modulation frequency and the 0-degree (P1-30/32) modulation phase.

The driver is biased to generate a transmit output frequency which is centered at 4300 MHz; the DC MOD CONTROL VOLTAGE causes the transmit frequency to sweep 50 MHz. The driver output is a 100-Hz square wave, the amplitude of which is determined by the DC MOD CONTROL VOLTAGE input. An integrator converts this square wave to a 100-Hz triangle wave, which is then amplified and applied to the multiplier/filter circuit.

The multiplier frequency translates the triangular 100-Hz modulation input signal. The 100-Hz modulation frequency causes an internal oscillator to produce a nominal output frequency; the dc reference level on the modulation signal continuously tunes a varactor to adjust this nominal value. The multiplier output is then applied to two filter circuits. A 4.3-GHz bandpass filter is tuned to the third harmonic of the oscillator and applies the 4250- to 4350-MHz FMCW deviation signal through the mixer to the transmit antenna. An 8.6-GHz bandpass filter is tuned to the sixth harmonic of the oscillator and applies an 8500- to 8700-MHz FMCW signal to the delay line.

A control voltage generator forms the transmitter deviation correction loop. The delay line converts the variable 8.6-GHz signal into an audio reference signal, the frequency of which is proportional to deviation rate. This reference signal is applied to a filter/amplifier circuit. This circuit produces the 50-foot altitude test signal and provides amplified input to the zero crossing detector. The zero crossing detector generates a duty cycle output which is proportional to the input signal.

A frequency-to-voltage converter and a wobbulation generator provide dc control voltages to ensure correct transmitter signal sweep. The duty cycle output of the zero crossing detector is averaged into a dc level that is proportional to the frequency of the deviation output signal. A wobbulation generator provides a dc output which prevents step changes in the DC MOD CONTROL VOLTAGE applied to the driver. The resulting +/- dc control voltages vary the driver bias to maintain transmitter deviation at 4250 to 4350 MHz.

The 4250- to 4350-MHz input signal from the receive ANT-52 antenna is applied to a strip line mixer. The mixer operates as follows to generate an if sine-wave altitude signal to the receiver. The transmit signal sweeps from 4250 to 4350 MHz. The receive signal is a delayed 4250 to 4350 MHz, depending on the altitude above the terrain. Example: A transmitted 4300-MHz signal returns as a 4300-MHz receive signal, but during the time required for the signal to travel to the terrain and back, the transmitter frequency has increased. The difference between the transmit and receive frequencies at the mixer is an if signal, the frequency of which is proportional to altitude above terrain (40 Hz/foot).

The receiver consists of preamplifier, filter, and detector circuits. The preamplifier filters and gain shapes the if ALT input from the mixer. A discrete RADIO ALT TEST input from the RAC applies a ground to the self-test signal gate when the RA TEST button is pushed on either AAP. When test mode is selected, a 50-foot altitude test signal is switched to the preamplifier instead of the ALT input from the mixer. This test signal is an if frequency corresponding to a 50-foot above terrain ALT input. The preselector output is applied to a filter/bandwidth control circuit.

The filter/bandwidth control circuit contains four selectable bandwidths. The DC ANALOG altitude signal from the summing amplifier selects the optimum bandwidth filter to remove any hf noise from the if altitude signal. The filtered signal is then

amplified and applied to a zero crossing detector and a signal presence detector.

The zero crossing detector detects each zero crossing of the sine-wave altitude input signal. The detector supplies a square-wave output to the time domain filter, at the same frequency as the input signal. The signal presence detector determines if signal strength is sufficient to provide a valid altitude measurement. If an adequate signal is present, an ENBL output is applied to activate the time domain filter. The time domain filter processes the square-wave input signal to remove noise and provide signal stabilization. The time domain filter supplies a series of trigger pulses to the altitude discriminator, at the same frequency as the input signal.

The altitude discriminator performs a frequency-to-voltage signal conversion. The trigger pulse input from the time domain filter is applied to course and fine discriminator circuits. These circuits incorporate aircraft installation delay (AID) and provide a dc voltage output to a summing amplifier. The AID is selected by a rear connector strap (P1-19/24) to be 40 feet. This provides a customized aircraft offset to ensure accurate altitude indications when the aircraft is in a touchdown attitude. This AID compensation is applied to an AID/self-test switch. The AID normally is switched to both discriminators, but is removed in self-test mode since the test function is internally generated and not related to aircraft characteristics.

The summing amplifier combines the discriminator outputs into the DC ANALOG altitude voltage. This voltage is used to select optimum filtering in the bandwidth control circuit and is applied to an output driver. The driver provides amplified ANALOG DC ALTITUDE signal to the RAC.

An FCS warn circuit controls a transistor switch to apply a discrete FCS WARN output (open = warn) to the RAC. This circuit trips when the discriminators apply OFF SCALE logic or in TEST mode. OFF SCALE logic is generated when the received signal is weak or when the aircraft altitude is above 2500 feet.

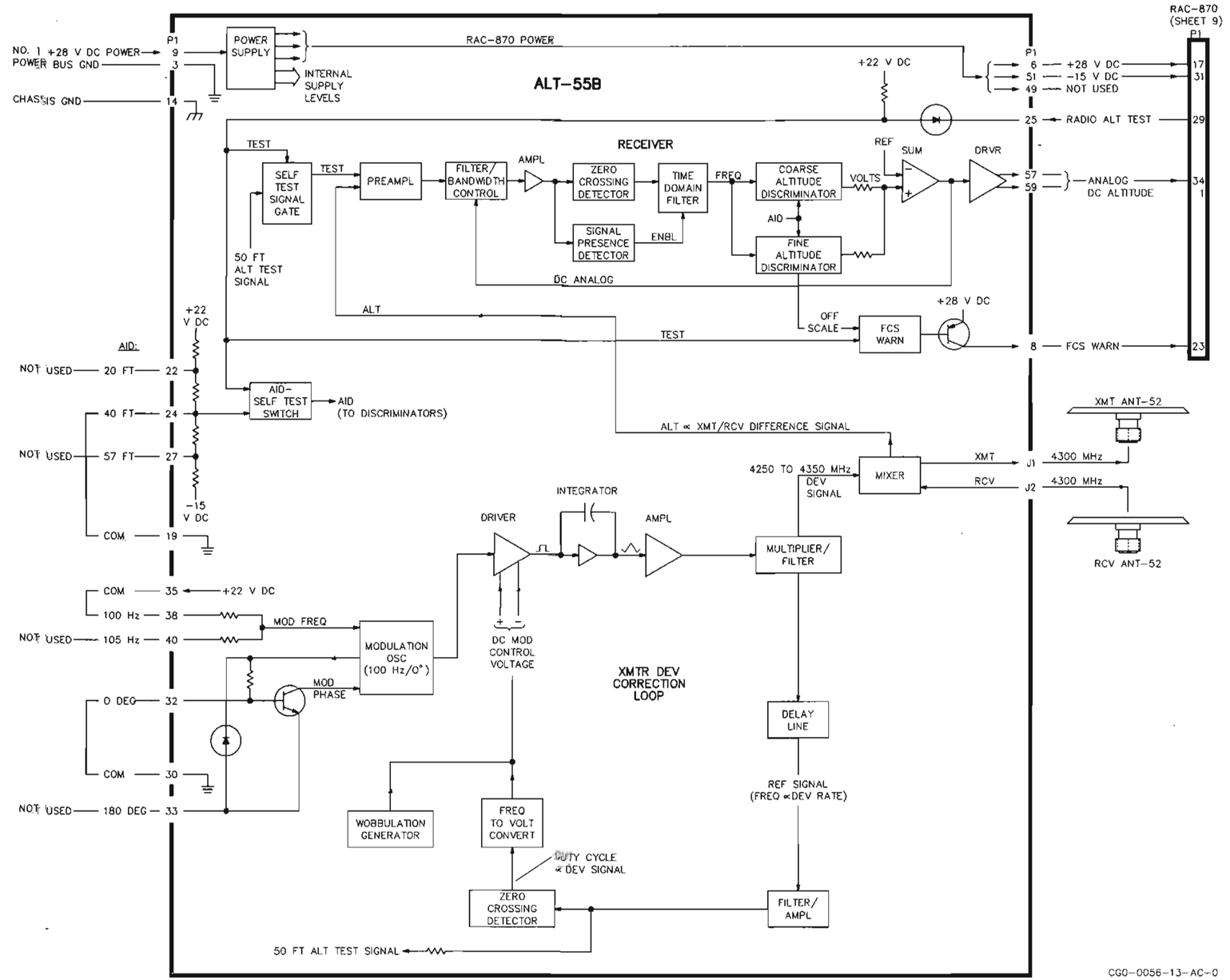

NS System Schematic
Figure 4-9-1 (Sheet 8 of 9)

Refer to figure 4-9-1, sheet 9. This sheet shows the RAC-870 radio altitude converter, the CMA-764 VLF/Omega receiver, and the VLF-ANT antenna coupler. The RAC-870 converts analog radio altitude from the ALT-55B into ARINC 429 digital format. The CMA-764 and the VLF-ANT are built by Canadian Marconi; only I/O for these two units is described at this time.

The RAC consists of a microprocessor and an altitude digitizer circuit. Operating power is derived from the no. 1 +28-V dc aircraft supply and applied through the ALT for common reference. An internal power supply generates additional required supply levels.

The microprocessor monitors SELF TEST and FCS WARN discretes, operates an altitude digitizer, and formats the ARINC 429 output data bus. A heartbeat monitor resets the microprocessor if program execution time becomes excessive; the reset ensures the processor is not hung up in an endless loop.

Radio altitude self-test is initiated by a pushbutton on one of the AAP altitude awareness panels. When either button is pressed, a discrete ground level is applied to P1-40 of the RAC. This ground is read directly by the microprocessor and also applied to a threshold set comparator. The ground (less than +2.5 V dc) causes the comparator to conduct, which applies a ground RAD ALT TEST output to the ALT. The ALT then initiates self-test; the ANALOG DC ALTITUDE signal simulates an altitude of 50 feet, and the FCS WARN discrete toggles.

The FCS WARN discrete provides a monitor output from the ALT to the RAC microprocessor. This monitor is normally a +28-V dc level but becomes an open circuit when self-test mode is selected, the received altitude signal becomes weak, aircraft altitude is greater than 2500 feet, or if the ALT loses power.

The microprocessor uses an altitude digitizer circuit to continuously read the ANALOG DC ALTITUDE signal from the ALT. A successive approximation technique is used to track the dc altitude signal. The 2-wire input signal is applied through a receiver to provide a dc level to the noninverting input of the radio altitude comparator. The microprocessor writes a digital altitude approximation to the d/a converter; the analog d/a output is applied to the inverting input of the radio altitude comparator. The result of this dc level comparison (NULL SENSE) is level and polarity monitored by the processor and used to intelligently compute the next approximation. The comparator output nulls when the analog equivalent of the approximated altitude equals the ALT altitude signal; this null informs the processor that the last altitude approximation was correct.

The microprocessor applies a serial output through an ARINC 429 low-speed transmitter to the IAPS system. This L-RAC-1 data bus provides ALT radio altitude, FCS warn status, and test status information to all four input/output data concentrators in the IAPS.

The CMA and the VLF-ANT form a VLF/Omega sensor system. These units are manufactured by Canadian Marconi. The VLF-ANT is an E-field antenna coupler. The CMA is a receiver/processor unit. Operating power is derived from the no. 1 +28-V dc aircraft supply.

The CMA receives two ARINC 429 low-speed tuning inputs from the IAPS system. The LB-GP BUS 2 input bus provides tune data from the left side of the IAPS. The RB-GP BUS 2 input bus provides tune data from the right side of the IAPS. The CMA uses either tune port to accept valid data and periodically switches between ports to verify that both are being serviced. Each input bus supplies initialize latitude/longitude, magnetic variation, GMT/date, TAS, heading, and mode control information.

The CMA receives and processes Omega and VLF navigation signals and provides two ARINC 429 low-speed output data buses. The L-VLF-1 output bus is applied to the IAPS system, and the L-VLF-2 output bus is applied to the IDS system. Each output bus provides position, velocity, track angle, ground speed, and status information. This data is used to compute and display FMS blended NAV deviation and bearing.

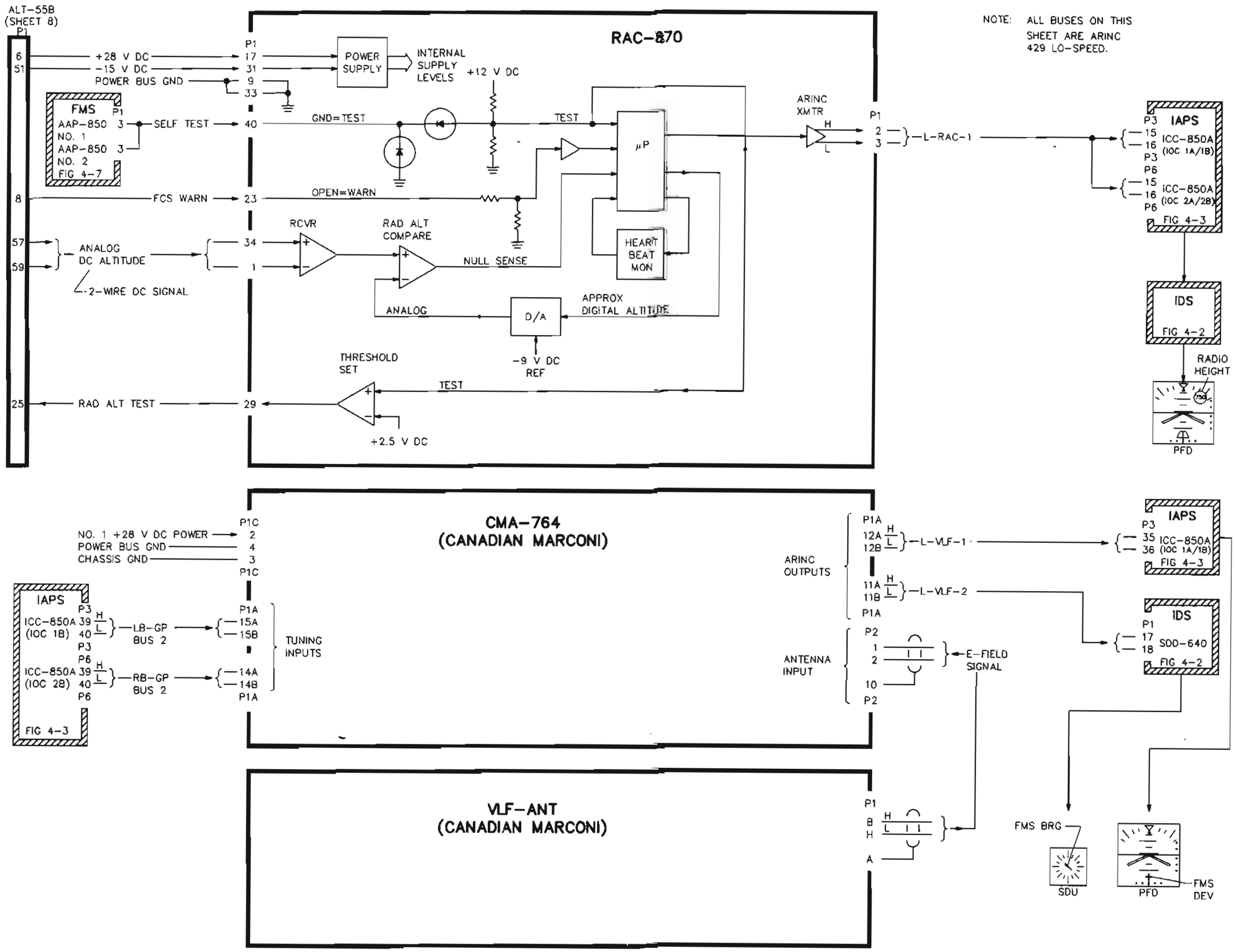

NS System Schematic
Figure 4-9-1 (Sheet 9 of 9)

This page intentionally left blank.

4.3.9 WXR (Weather Radar System)

4.3.9.1 Overview

The WXR consists of a single LRU which provides precipitation and turbulence detection. Mode control is provided by either of the CDU-850A's. Detected X-band weather radar and/or turbulence is processed into a video output for display on the selected crt. Refer to figure 4-10.

The RTA-854 is an integrated receiver/transmitter/antenna unit. This unit is mounted in a radome located in the nose of the aircraft. The RTA consists of an antenna, an rf assembly, a pedestal assembly, and a base assembly. The antenna is a 14-inch flat plate antenna located in the most forward portion of the aircraft. The rf assembly contains the receiver and transmitter circuits. The pedestal assembly contains tilt/scan motors and an optical feedback switch. The base assembly contains the power supply and signal processing circuits.

The RTA-854 accepts control input data from either of the CDU-850A control display units (in the FMS system). Pilot side control data and attitude data are applied to IAPS data concentrators, and then on the LB-GP BUS 3 to the RTA. Copilot side control data and attitude data are applied to IAPS data concentrators, and then on the RB-GP BUS 3 to the RTA.

Processed WXR video output data is generated and applied on the WXT-1 data bus to the IDS system. This video data normally is displayed on either of the ND's or on the MFD.

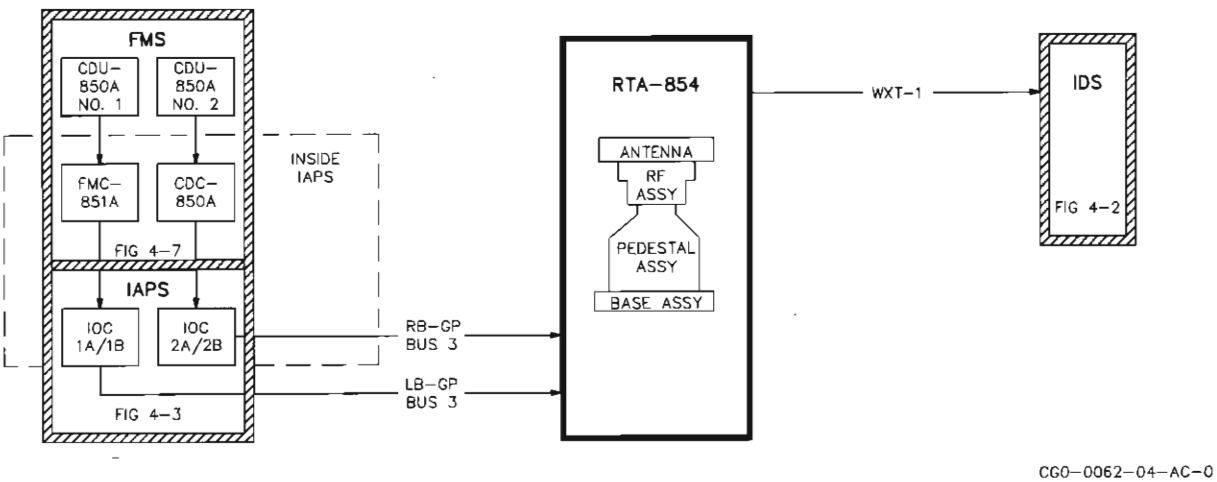

WXR (Weather Radar System) Overview
Figure 4-10

4.3.9.2 System Schematic

The WXR system consists of only one LRU; the RTA-854 is a single integrated receiver/transmitter/antenna unit. This unit provides X-band weather radar detection and also Doppler turbulence detection. WXR mode control is selected on the CDU-850A's. Processed WXR video output data is applied directly to displays in the IDS system. Refer to figure 4-10-1, sheet 1. This sheet shows the RTA I/O and processing circuits. Sheet 2 shows the rf transmitter, receiver, and antenna circuits.

RTA circuits on this sheet consist of the microprocessor, a UART circuit, data decoders, the digital signal processor, and the ARINC 453 output driver. Operating power is provided by the no. 1 +28-V dc aircraft supply; an internal power supply converts this voltage into required supply levels. An on/off discrete (P1-16) also is provided. If this option is not used, P1-16 should be strapped to ground (power on).

The microprocessor controls the RTA operation using a 16-bit bidirectional data bus. This bus is applied to a transceiver, a latch, a flip-flop, and the DSP control interface. The transceiver provides 2-way data transfer between the processor AD0-AD15 data bus and the internal DATA bus used throughout the RTA. The latch circuit decodes the address of a requested memory location; the contents of the addressed location are read from memory onto the internal DATA bus. The flip-flop circuit decodes device control logic. The DSP control interface allows the microprocessor to directly access the digital signal processor circuits.

A dual UART circuit is used to read input control data. The pilot enters WXR control data on the left CDU. This data is applied to the FMC-851A. These control words are applied on the L-FMS-1 bus to data concentrators in the IAPS, and then on the LB-GP BUS 3 bus to the RTA. This data is input through an ARINC receiver and applied to the receive port of a UART. The copilot enters WXR control data on the right CDU; this data is applied to a second UART in the RTA. The microprocessor reads WXR CONTROL data from the UART's onto the internal DATA bus. This input data contains WXR mode selection, gain/tilt/range commands, and attitude information.

Data decoders read microprocessor instructions from the data bus and convert them into discrete control signals. A frequency decoder decodes FREQ SEL 1 or FREQ SEL 2 logic, which selects one of two SAW oscillators in the rf exciter circuit. A digital-to-analog converter decodes an AGC voltage, which controls the gain level of the receiver circuit. An antenna drive circuit decodes TILT and SCAN voltage levels, which operate the tilt and scan motors in the pedestal assembly. The pedestal assembly returns a FEEDBACK control level, which is buffered onto the data bus.

The digital signal processor (DSP) converts the receiver output signals into a processed WXR video signal. Dc "I" and "Q"voltage levels are generated in the receiver circuit (refer to sheet 2). These voltages are in-phase and quadrature (90°) dc representations of the received echo signal. The DSP processes these voltages into a signal that identifies the direction, range, and intensity of the precipitation or turbulence that caused the reflection (echo). The output display signal is synchronized with the antenna sweep to paint a full-screen radar picture of the precipitation pattern along the flight path.

The dc "I" and "Q" signals from the receiver are applied through a range filter to an analog-to-digital converter. The range filter adds an offset to the dc signals which corresponds to the selected range and low-pass filters the result. The analog-to-digital converter provides digitized LEVEL and ANGLE outputs which address PROM's in the DSP data unit.

The DSP data unit contains RMS PROM's, PHASE PROM's, and an ALU circuit. The RMS and PHASE PROM's are addressed to provide corresponding vector data (magnitude and angle) outputs to the ALU. The ALU circuit estimates the amount of precipitation in the echo signal for that vector and provides this processed DATA to the scan-to-scan filter (also to the microprocessor through the DSP control circuit). Proper STC control also is generated at this time by the DSP data unit and applied to the receiver.

The DSP control circuit generates XMT CONTROL pulses and LIMITER BIAS logic outputs which are applied to the rf assembly (refer to sheet 2). This circuit is operated by the DSP data unit and by the microprocessor.

The scan-to-scan filter stores and filters the video output to ensure that the WXR output data is a cohesive image showing the most recent sweep. This circuit stores the latest screen display of data and updates this composite video picture as the antenna scans. This filter provides a dynamic full-sweep WXR video signal to the ARINC 453 output circuit.

The ARINC 453 output circuit formats processed WXR data for transmission to the IDS system. This circuit receives WXR video data from the scan-to-scan filter and status data from the microprocessor. (The processor also samples the output data using the internal DATA bus.) Formatted WXR video and status data is transmitted on the WXT-1 ARINC 453 very-high-speed data bus to the IDS system. This data may be displayed on either of the ND's or on the MFD.

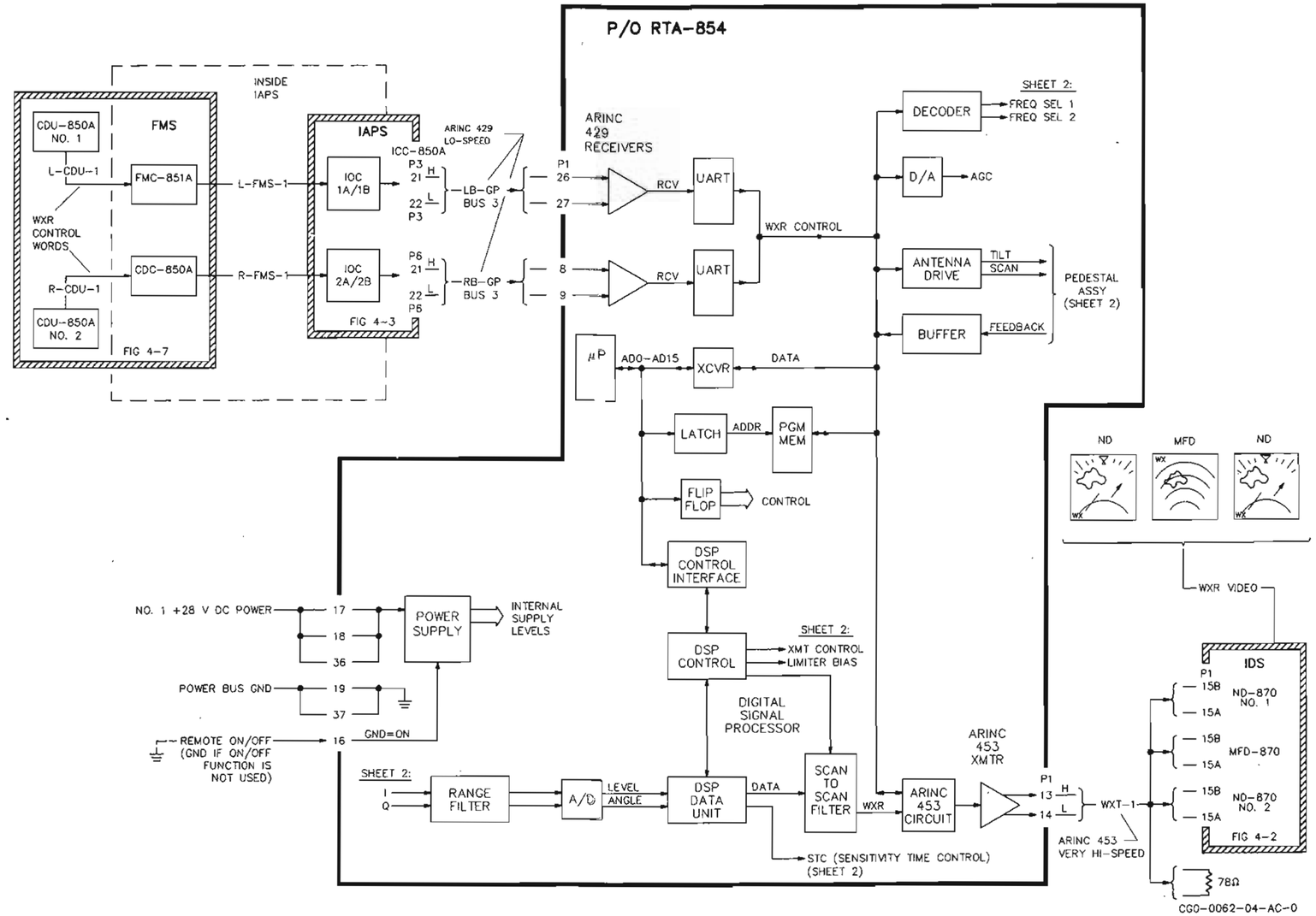

WXR System Schematic
Figure 4-10-1 (Sheet 1 of 2)

Refer to figure 4-10-1, sheet 2. This sheet shows the RTA rf transmitter, antenna, and receiver circuits. Sheet 1 shows the I/O and processing circuits.

The rf transmitter generates X-band pulses of various widths and repetition rates (depends on selected mode and range). These rf pulses are applied through an isolating duplexer and radiated out a 14-inch flat plate antenna. Very narrow beam pulses are transmitted so that as the antenna sweeps, each valid received echo signal is recognized as a reflection at a specific scan angle. The transmitter is extremely stable and allows the RTA to transmit at an advanced pulse repetition rate to detect turbulence as well as X-band weather.

The transmitter exciter contains two SAW oscillators. The primary oscillator operates at 744.40 MHz; the preheat oscillator operates at 744.80 MHz. Only one oscillator is enabled at any time. The preheat oscillator is enabled by the microprocessor before each transmission. The 744.80-MHz oscillator generates a variable width pulse to warm the impatt amplifier to operating temperature. The impatt amplifier is preheated to ensure a phase-stable and flat-amplitude pulse output. Note that the receiver is tuned only to the primary frequency, so any returns at the preheat frequency are rejected and not displayed.

The processor enables the primary oscillator when a pulse is to be transmitted. This 744.40-MHz signal is frequency doubled to 1.489 GHz and applied to a mixer. Refer to sheet 2 and note the frequency divider and multiplier stages which generate the first (8.934-GHz), second (372.2-MHz), and third (33.8-MHz) oscillator frequencies. These frequencies are used in the receiver circuit. In transmit mode, the XMT MODE switch is closed and a 67.6-MHz frequency is applied to the mixer. The mixer output is a 1.556-GHz summation frequency.

The 1.556-GHz mixer output is amplified and applied to a times-6 multiplier to generate the 9.34-GHz transmit frequency. This frequency is applied to the preheated impatt amplifier. This amplifier provides constant X-band power output.

The modulator is biased on by XMT CONTROL pulses from the DSP control circuit (sheet 1). The pulse width and repetition rate of these pulses is determined by the processor and limit checked by circuits in the modulator. The modulator then provides variable pulse output to the impatt amplifier. The impatt amplifier is pulsed on by the modulator and chops the 9.34-GHz transmit frequency into the X-band pulse output. This pulse transmission is then applied through the duplexer and radiated out the antenna. In transmit mode the duplexer is biased to isolate the antenna from the receiver circuits.

The antenna is positioned by motors in the pedestal assembly. The scan motor (B1) positions the antenna ±60° left or right of the flight path. The tilt motor (B2) positions the antenna ±30° up or down. Both motors run in response to microprocessor generated commands (sheet 1). Normally, the antenna repeatedly scans the entire lateral range at a fixed rate. (This rate is synchronized with the video output to paint a dynamic radar picture of the precipitation pattern along the flight path.) The tilt motor automatically adjusts the antenna to the optimum tilt angle for the existing mode and range settings. An optical switch (S1) provides a feedback reference to the processor computation circuits. This reference is buffered onto the data bus.

The receiver processes the echo of each transmitted pulse into dc components which are applied to the digital signal processor (DSP). The DSP processes these components into the output video signal (refer to sheet 1).

The echo return signal is received by the antenna and applied through the duplexer to a preselector filter. In receive mode, the duplexer is biased to isolate the antenna from the transmitter. This receive signal is raw (unprocessed) video; the signal strength of this echoed transmisssion is proportional to the precipitation encountered by that scan.

The preselector bandpass filters the 9.34-GHz signal and applies it to a PIN diode limiter. This is a protection circuit which is operated by LIMITER BIAS logic decoded from the DSP control circuit. In transmit mode, this circuit ensures that no transmitted rf energy reaches the receiver. In receive mode, this circuit limits the amplitude of the received signal. The amplitude limited receive signal is then passed through a low-noise GAASFET amplifier to the first mixer.

The amplified 9.34-GHz receive signal is mixed with a 8.934-GHz reference to produce the 406-MHz first if. This signal is amplified, filtered, and applied to the second mixer. The 406-MHz first if is mixed with a 372.2-MHz reference to produce the 33.8-MHz second if. This signal is then amplified and level adjusted by STC (sensitivity time control from the

DSP) and AGC (automatic gain control from the processor) amplifiers. The resulting 33.8-MHz signal is applied to the sin/cos mixer circuits.

The sin/cos mixer circuits divide the level adjusted second if into a pair of phase related dc levels. A 33.8-MHz reference frequency is applied to a 90° phase shift circuit. This circuit provides 33.8-MHz signals with sine and cosine phase relationships to the sin/cos mixer circuits. The output of the sin mixer is a dc (0-Hz) level which corresponds to the sine (in-phase) component of the received signal. The output of the cos mixer is a dc (0-Hz) level which corresponds to the cosine (quadrature) component of the received signal. These two voltages are amplified and applied as the "I" and the "Q" dc levels to the range filter shown on sheet 1. The DSP circuits process these levels into the WXR video output.

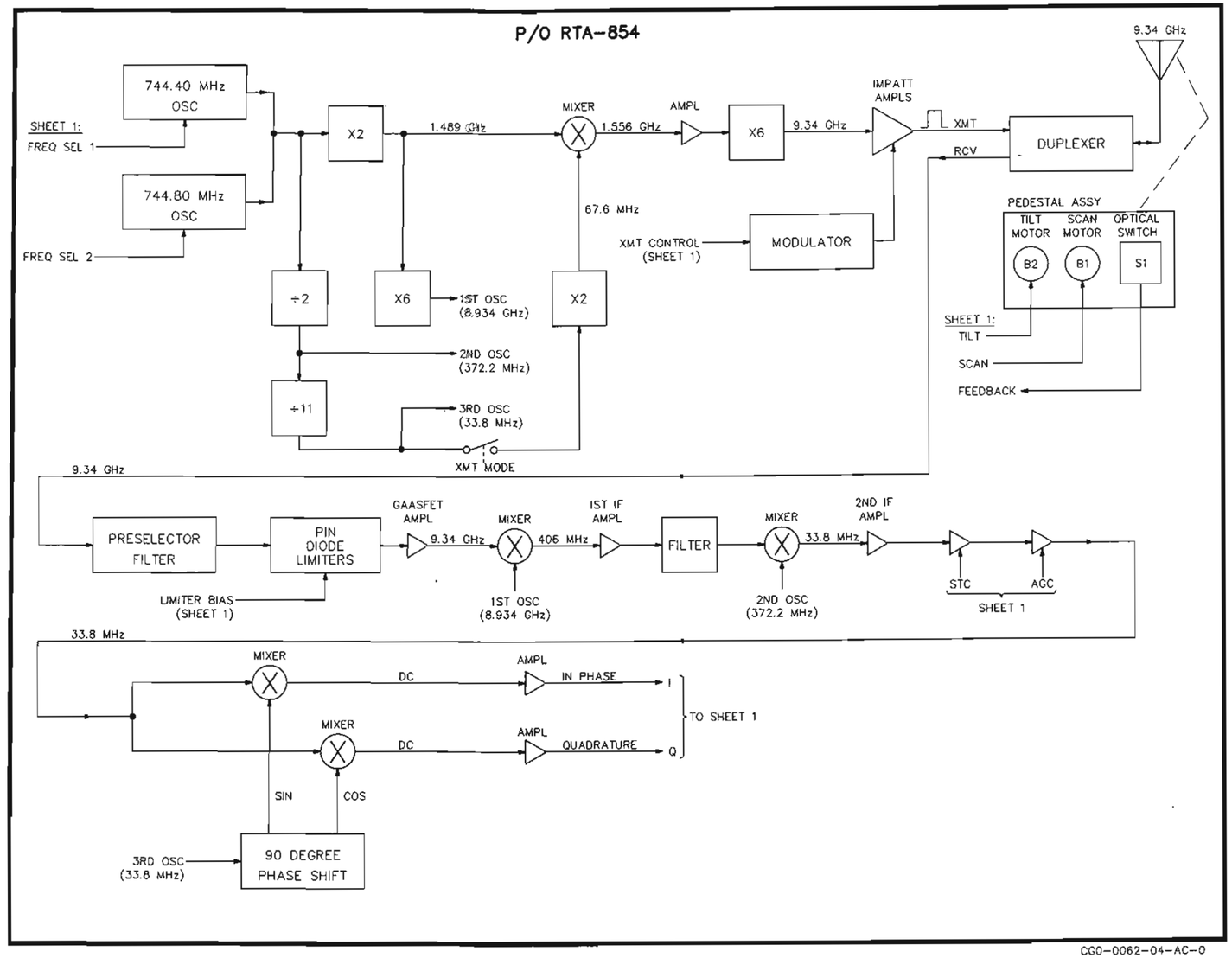

WXR System Schematic
Figure 4-10-1 (Sheet 2 of 2)

This page intentionally left blank.

4.3.10 ADAS (Aircraft Data Acquisition System)

4.3.10.1 Overview

The ADAS encodes engine parameters and aircraft discretes for use by the IDS and IAPS systems. The ADAS also decodes aural warn information from the IAPS and caution/warn lamp driver information from the IDS and applies corresponding discrete outputs to the "Beech aircraft data interface." This interface includes aircraft sensors and airframe switches not directly associated with the 10 defined avionics systems.

The ADAS consists of an engine data concentrator for each engine and a dual-redundant data acquisition unit. Refer to figure 4-11. Each LRU is described below:

EDC-850 No. 1 Engine Data Concentrator
EDC-850 No. 2 Engine Data Concentrator
DAU-850 Data Acquisition Unit

The no. 1 EDC-850 gathers discrete data from the no. 1 engine and from various aircraft sensors. This data is converted to digital format and then transmitted to both channels of the DAU-850 and to the CS system for use in reversionary mode. The EDC is manufactured by Ametek.

The no. 2 EDC-850 gathers discrete data from the no. 2 engine and from various aircraft sensors. This data is converted to digital format and then transmitted to both channels of the DAU-850 and to the CS system for use in reversionary mode. The EDC is manufactured by Ametek.

The DAU-850 is a dual-redundant data accumulator that provides bidirectional interface between the avionics systems and the aircraft engines, sensors, and warn/caution systems. The DAU contains two identical channels which are isolated from each other to provide independent operation. Each channel processes engine data (from both EDC-850s), discrete aircraft sensor/switch data, and clock data into digital bus outputs which are applied to the IDS and IAPS systems. Each channel also processes IDS (from ECD and MFD) and IAPS (from both left and right side) data bus inputs into aural warn and exceedance caution/warn lamp driver discrete outputs.

This sheet also shows two ARINC 429 clocks. These clocks are Beech supplied units, each of which provides synchronized data to one channel of the DAU-850. The clocks provide time and date reference to the processors.

Both computers in the AHS system monitor the STRUT logic discrete. When either computer is initializing, an INIT discrete output is applied to the DAU-850.

ADDENDUM 2

TO

STARSHIP 1 AVIONICS SYSTEM

SYSTEM MANUAL

PART NUMBER 523-0774076, DATED 14 JAN 1989

Insert this addendum sheet facing page 4-196 of the Theory of Operation Section of the manual

The Beech Aircraft Data Interface provides several discrete inputs to the Collins avionics system. These discretes are applied to the two EDC-850's and to the DAU-850. This data is then serially transmitted to the EICAS display.

The ADAS system schematics show some (but not all) of these discretes inputs. Tables 5-86 and 5-87 are added by this addendum.

Refer to table 5-86 for a complete list of the EICAS messages, a description of each message, and the conditions which will toggle that message. Refer to table 5-87 for a complete list of the discrete inputs applied to the EDC-850's and to the DAU-850. This table is also used to determine which discretes have caused an EICAS message to display.

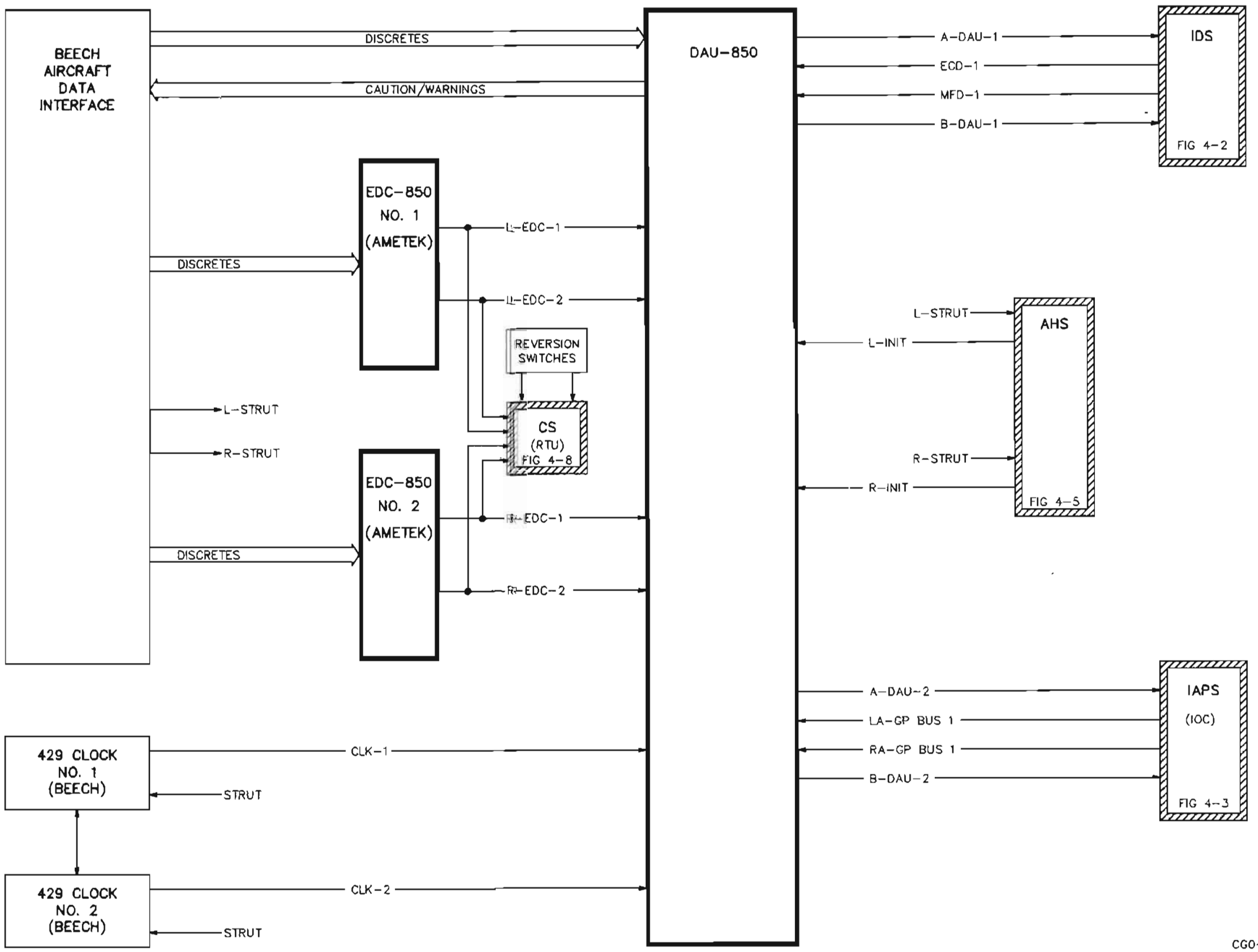

ADAS (Aircraft Data Acquisition System) Overview
Figure 4-11

4.3.10.2 System Schematic

The ADAS gathers discrete data from both of the aircraft engines and from many aircraft sensors and switches. This data is applied on digital buses to computation circuits in the IAPS system and to displays in the IDS system. The IAPS and IDS systems monitor this data and return warn or caution alerts to the ADAS if an exceedance condition occurs. These alerts are decoded in the ADAS and applied to the Beech aircraft data interface.

Refer to figure 4-11-1, sheet 1. This sheet shows the no. 1 EDC-850 engine data concentrator. The EDC converts analog engine and aircraft sensor data to digital format and collects discrete switch logic from various aircraft devices. This digitized data is concentrated and then transmitted to the DAU and to the RTU's (in the CS system). The EDC is built by Ametek and supplied by Beech; only the I/O for this unit is described at this time.

The EDC derives operating power from both the no. 1 and the no. 2 +28-V dc aircraft supplies; loss of left or right side primary power will not completely disable the unit. Rear connector pins P1-46 and P2-46 are strapped to ground to provide no. 1 source identification to the EDC software.

Parameters from the no. 1 engine and the aircraft discretes shown on sheet 1 are concentrated and formatted onto the L-EDC-1 and L-EDC-2 ARINC 429 low-speed data bus outputs. Both buses contain engine discretes, prop rpm, ITT, N1, oil pressure, oil temperature, torque, and fuel flow information.

Note that the limits of the aircraft discretes shown on this sheet are identified inside the EDC. (Note: TSP means twisted shielded pair and TST means twisted shielded triple; these are analog signals.) Most discretes are logic levels that toggle between open and 28 V dc, or between ground and open conditions.

The L-EDC-1 bus is applied to the left computation circuits (A-side) of the DAU and to the left RTU. The L-EDC-2 bus is applied to the right computation circuits (B-side) of the DAU and to the right RTU. Either RTU will display engine data when the onside reversionary mode is selected; refer to figure 4-8. This reversionary mode normally is selected only if the ECD and the MFD displays both fail.

The AHS no. 1 computer and the no. 1 429 clock unit both monitor the STRUT switch logic discrete shown on this sheet. The STRUT (weight on wheels) discrete is a ground level when the aircraft is on the ground. The AHC also provides a +28-V dc L-AHC-INIT output to the DAU when the computer is aligning (initializing).

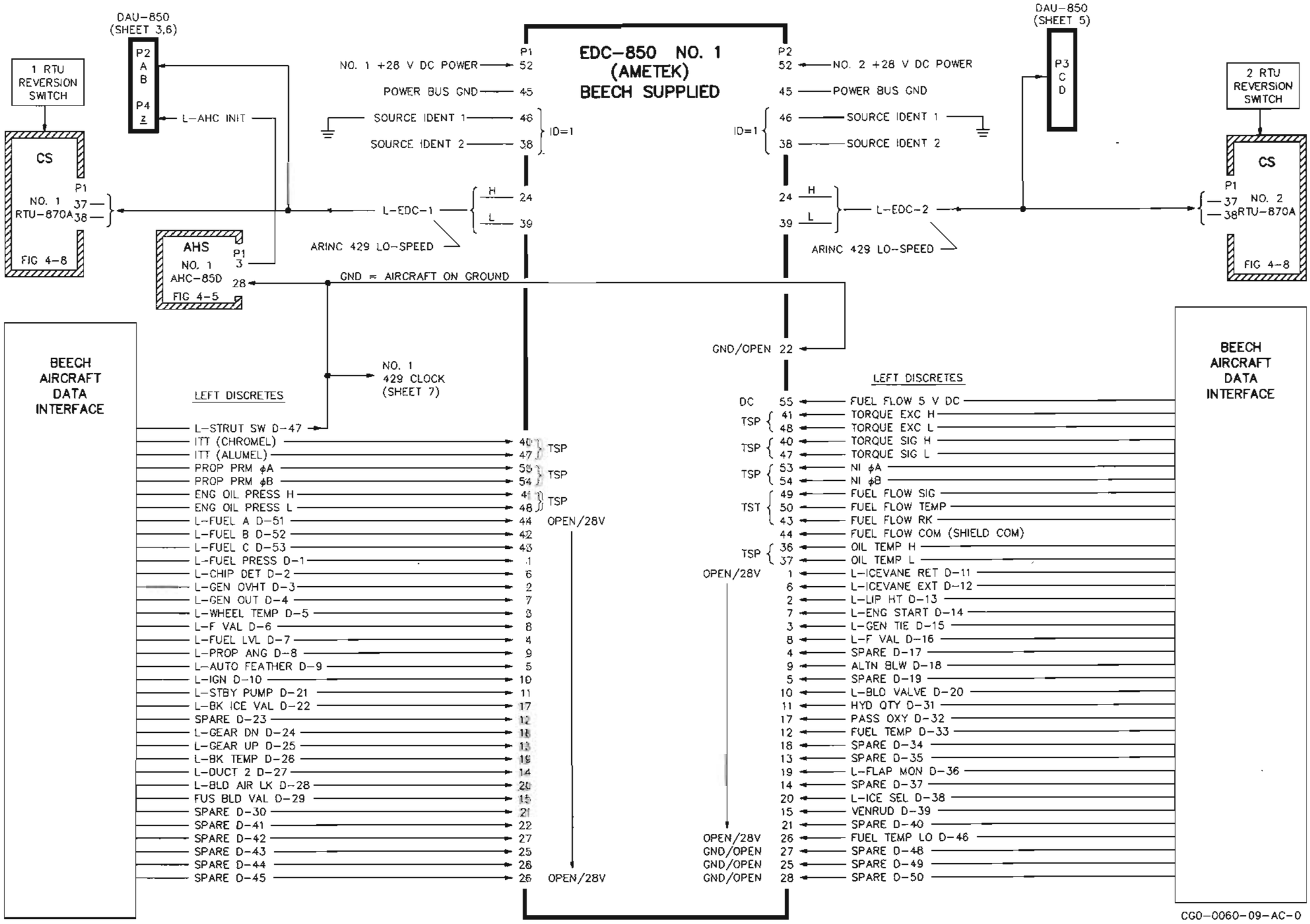

ADAS System Schematic
Figure 4-11-1 (Sheet 1 of 7)

Refer to figure 4-11-1, sheet 2. This sheet shows the no. 2 EDC-850 engine data concentrator. The EDC converts analog engine and aircraft sensor data to digital format and collects discrete switch logic from various aircraft devices. This digitized data is concentrated and then transmitted to the DAU and to the RTU's (in the CS system). The EDC is built by Ametek and supplied by Beech; only the I/O for this unit is described at this time.

The EDC derives operating power from both the no. 1 and the no. 2 +28-V dc aircraft supplies; loss of left or right side primary power will not completely disable the unit. Rear connector pins P1-38 and P2-38 are strapped to ground to provide no. 2 source identification to the EDC software.

Parameters from the no. 2 engine and the aircraft discretes shown on sheet 2 are concentrated and formatted onto the R-EDC-1 and R-EDC-2 ARINC 429 low-speed data bus outputs. Both buses contain engine discretes, prop rpm, ITT, N1, oil pressure, oil temperature, torque, and fuel flow information.

Note that the limits of the aircraft discretes shown on this sheet are identified inside the EDC. (Note: TSP means twisted shielded pair and TST means twisted shielded triple; these are analog signals.) Most discretes are logic levels that toggle between open and 28 V dc, or between ground and open conditions.

The R-EDC-1 bus is applied to the left computation circuits (A-side) of the DAU and to the left RTU. The R-EDC-2 bus is applied to the right computation circuits (B-side) of the DAU and to the right RTU. Either RTU will display engine data when the onside reversionary mode is selected; refer to figure 4-8. This reversionary mode normally is selected only if the ECD and the MFD displays both fail.

The AHS no. 2 computer and the no. 2 429 clock unit both monitor the STRUT switch logic discrete shown on this sheet. The STRUT (weight on wheels) discrete is a ground level when the aircraft is on the ground. The AHC also provides a +28-V dc R-AHC-INIT output to the DAU when the computer is aligning (initializing).

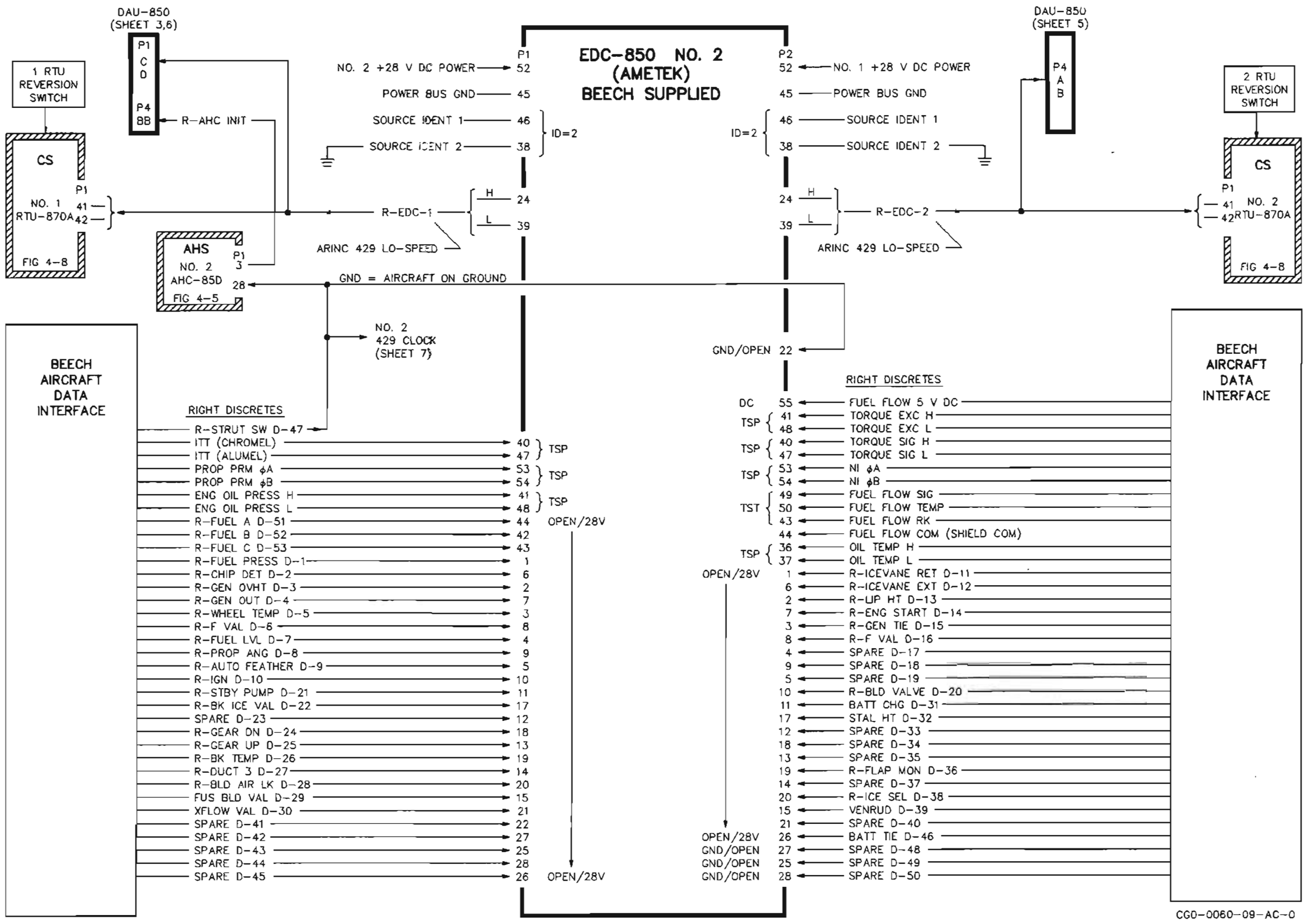

ADAS System Schematic
Figure 4-11-1 (Sheet 2 of 7)

The DAU-850 is a dual-redundant data accumulator that provides engine and aircraft sensor data to the IAPS/IDS systems and provides exceedance discretes to aircraft warn/caution annunciators and aural devices.

Each half of the DAU is an independent unit functioning with separate power supply, digital bus input, discrete input, microprocessor, digital bus output, and discrete output circuits. Channel isolation is maintained to the maximum extent possible, so that a failure in either half of the DAU will not affect the operation of the other half.

Refer to figure 4-11-1, sheet 3. This sheet shows the DAU left (A-side) computation circuits; sheet 4 shows the left side discrete circuits. Sheets 5 and 6 show the right (B-side) computation and discrete circuits.

The left computation circuit of the DAU consists of the A-side power supply, the A-side microprocessor, a dual ARINC UART circuit, an ARINC bus multiplexer circuit, and a strap buffer. These circuits function with those shown on sheet 4 to form one of the two independent DAU channels.

A-side operating power is provided by the no. 1 +28-V dc aircraft supply. The +28-V dc input is applied through an internal 4-amp breaker to the power supply circuit. This circuit generates the required internal supply levels, +5-V dc standby (RAM) power, and power supply interrupt/validity discrete outputs.

The microprocessor uses three ports to control DAU A-side operation. Port 0 is an 8-bit bidirectional data bus; this DB0-DB7 bus directly reads from local RAM/PROM memory and communicates with the rest of the unit through a data transceiver. Port 1 provides dedicated mode control to the ARINC circuits through an ARINC buffer. Port 2 provides address output; this address is decoded into chip controls and used to access locations in the local RAM/PROM memory. Note that this RAM receives keep-alive (STBY) power for memory retention during short-term power losses.

The microprocessor directly monitors five discrete inputs. The power supply applies voltage VALID, INT-P interrupt, and STBY PWR VALID inputs. The VALID logic discrete resets the processor if a power supply level fluctuates (in-process computations may be incorrect). The INT-P power interrupt alerts the processor if input power drops below an acceptable level. The STBY PWR VALID input alerts the processor if the 5-volt standby power did not remain valid throughout the last power-down. The processor also receives an INT-A or an INT-B interrupt when ARINC data is ready to be processed.

The ARINC UART circuit controls the primary input and both output data buses. The L-EDC-1 ARINC 429 low-speed data bus input is applied through a receiver to the receive port of a UART. This bus brings engine discretes, prop rpm, ITT, N1, oil pressure, oil temperature, torque, and fuel flow parameters. This data is read from the UART (through a bus interface circuit and data transceiver) by the microprocessor.

Processed ARINC 429 input data and DAU generated output data is applied from the microprocessor (through the data transceiver and bus interface circuit) to this ARINC UART. When enabled to transmit, the UART applies serial data through an ARINC transmitter as the A-DAU-1 data bus to the IDS system. This ARINC 429 high-speed bus applies the received EDC data parameters, time, date, and the DAU input discrete parameters to the ECD and to the MFD displays. Normally, this information is displayed on the ECD, but may be switched to the MFD. An INT-A interrupt is generated whenever this UART receives a word or has space in its transmit buffer (if enabled).

The A-DAU-1 transmit data also is applied to the receive port of a second ARINC UART. The output data is read from the UART (through a bus interface circuit and data transceiver) by the microprocessor. This path allows the processor to sample transmitted ADAS data.

Processed ARINC 429 input data and DAU generated output data is applied from the processor to this UART. When enabled to transmit, the UART applies serial data through an ARINC buffer and transmitter as the A-DAU-2 data bus to the IAPS system. This ARINC 429 low-speed bus applies the received EDC data parameters, time, date, DAU input discrete parameters, and the MFD control word (from the MFD) to left side input/output data concentrators. This information is monitored and distributed to other buses in the IAPS. An INT-B interrupt is generated whenever this UART receives a word or has space in its transmit buffer (if enabled).

The ARINC multiplexer receives six input data buses. Each ARINC 429 low-speed bus is applied through a receiver to a multiplexer input. An INT-B interrupt to the processor is generated by an ARINC device interrupt circuit whenever the multiplexer is ready for servicing. The processor functions (with any ARINC device interrupt) as a traffic manager by

servicing these input buses, controlling the internal data flow, and steering data to the appropriate UART for transmission to the IDS/IAPS systems.

The six input data buses contain the following information:

- The R-EDC-1 bus brings cross-side engine discretes, prop rpm, ITT, N1, oil pressure, oil temperature, torque, and fuel flow parameters from the no. 2 EDC.
- The CLK-1 bus brings GMT time and date parameters from the no. 1 429 clock.
- The LA-GP BUS 1 bus brings aural caution and warning commands from the left side of the IAPS; this information is translated into discrete aural outputs.
- The RA-GP BUS 1 bus brings aural caution and warning commands from the right side of the IAPS; this information is translated into discrete aural outputs.
- The ECD-1 bus transmits DAU data words only when an exceedance has occurred. This bus brings master caution and warning lamp driver commands from the ECD; this information is translated into discrete 3-Hz lamp driver outputs.
- The MFD-1 bus transmits DAU data words (and the MFD mode word) only when an exceedance has occurred and/or reversionary mode is selected. This bus brings master caution and warning lamp driver commands from the MFD; this information is translated into discrete 3-Hz lamp driver outputs.

The strap buffer circuit monitors source identification and rear connector engage interlocks. Source identification is defined to the processor by internally strapping two discrete buffer inputs. Input A is strapped to +5 V dc and input B is strapped to ground to define no. 1 (A-side) source identification.

Rear connector engage interlocks allow the processor to determine if any of the four mating connectors is not installed. This ensures that the processor is not fooled into reading "open" discrete levels if a mating connector becomes loose. These P1 ENG, P2 ENG, P3 ENG, and P4 ENG interlocks each return a ground level to a strap buffer input when the mating connectors are engaged properly.

This source identification and connector engage interlock information (along with DAU discrete data from sheet 4) is buffered onto the B0-B7 data bus. The B0-B7 bus is read by the microprocessor through a dedicated data transceiver.

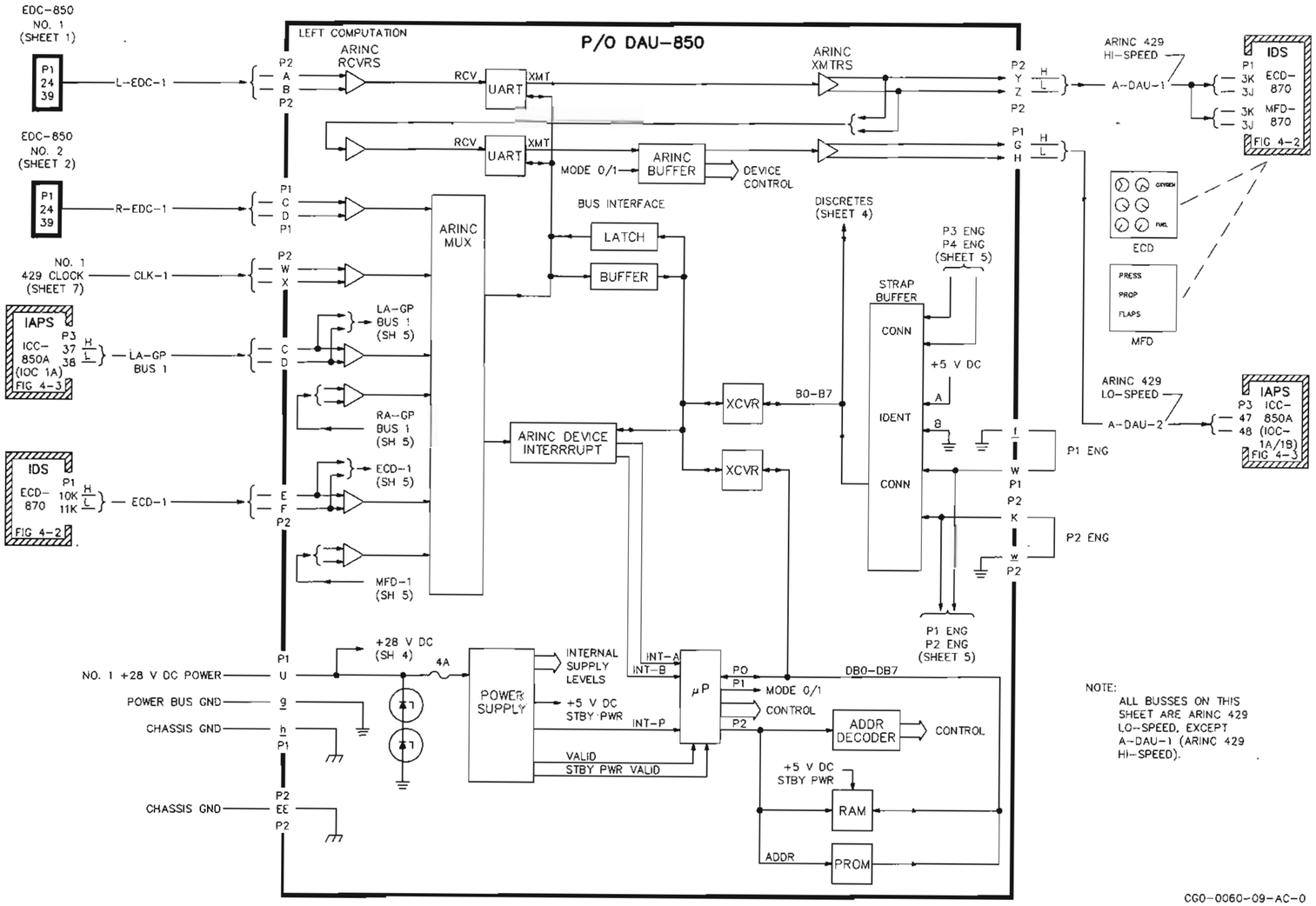

ADAS System Schematic
Figure 4-11-1 (Sheet 3 of 7)

Refer to figure 4-11-1, sheet 4. This sheet shows the DAU-850 left (A-side) discrete circuits; sheet 3 shows the left side computation circuits.

The left discrete circuit of the DAU consists of a reference and test circuit, a parallel conversion circuit, and an output driver circuit. All operating power is generated by the A-side power supply. These circuits function with those shown on sheet 3 to form one of the two independent DAU channels.

The reference and test circuit generates discrete voltages for use by internal circuits. +28-V dc input power provides a voltage reference for the open/28-volt discretes; an internal +12-V dc level provides a voltage reference for the ground/open discretes. These VREF outputs are used as the reference inputs to the comparator circuits. The TEST output consists of two dc voltages which are multiplexed onto the data bus in response to decoded self-test logic from the processor. These voltages test the multiplexer control circuits, the comparators, and the bus circuits associated with the discrete inputs.

The parallel conversion circuit reads the discrete input data applied to the DAU, converts this information into parallel format, and buffers this parallel data onto the B0-B7 data bus. The circuit consists of input protection, multiplexer, comparator, and buffer stages.

The limits of each aircraft input discrete shown on this sheet are identified inside the data interface box. These discretes are logic levels that toggle between open and 28 V dc or between ground and open conditions.

Each discrete is applied to an input protection circuit which provides 10-volt zener limiting. Note that the P3 and P4 (connector) discretes from sheet 6 also are applied to this A-side input circuit, so that a full complement of the DAU input discretes is received by the microprocessor.

The discrete inputs (and TEST logic) are then selectively multiplexed to an analog comparator. The comparator checks each discrete voltage level against the applicable VREF reference voltage. The resulting 5-volt/ground logic level is applied to a data buffer.

Decoded control logic from the processor loads the buffered data onto the parallel B0-B7 data bus. This discrete data (along with source identification and connector engage interlock information from sheet 3) is read by the microprocessor through a dedicated data transceiver.

The output driver circuit converts processed data into aural warn and pulsing lamp driver discrete outputs. Aural warn data is applied to the DAU on the LA-GP BUS 1 or RA-GP BUS 1 data bus. Lamp drive caution/warn data originates in the IDS system and is applied to the DAU on the ECD-1 (or MFD-1) data bus; this data word is transmitted only when an exceedance occurs.

Processed data is applied to latch and flasher control circuits. The latch circuit decodes discrete logic to enable the appropriate drivers. The flasher control circuit is a 3-Hz oscillator enabled by the microprocessor.

When an aural warn is decoded, the latch circuit switches on the appropriate output transistor. The transistor saturates and applies a ground AURAL WARN output to the Beech aircraft data interface. This interface generates the audio tone.

When a lamp drive master caution/warning is decoded, the latch circuit applies a ground to one side of a NOR gate, and the processor enables the flasher control circuit. The flasher is synchronized with its sister flasher circuit on the B-side of the DAU. The enabled flasher gates a 3-Hz output to a transistor current source. The pulsing 3-Hz lamp driver MASTER CAUTION (or MASTER WARN) output is then applied to the Beech aircraft data interface. The MASTER WARN output is not used at this time; this annunciator is operated only by the Beech aircraft data interface.

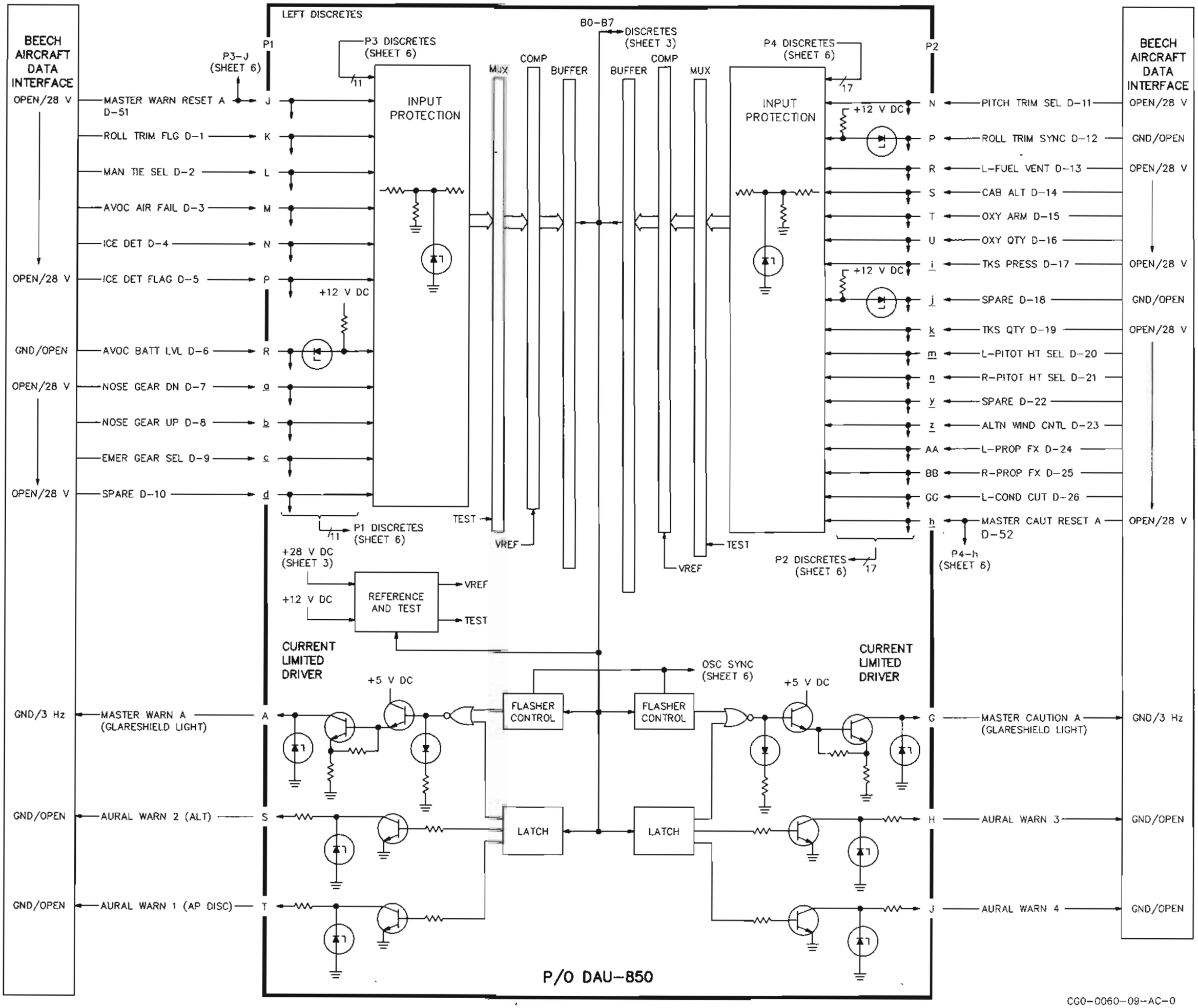

ADAS System Schematic
Figure 4-11-1 (Sheet 4 of 7)

Refer to figure 4-11-1, sheet 5. This sheet shows the DAU-850 right (B-side) computation circuits; sheet 6 shows the right side discrete circuits.

The right computation circuit of the DAU consists of the B-side power supply, the B-side microprocessor, a dual ARINC UART circuit, an ARINC bus multiplexer circuit, and a strap buffer. These circuits function with those shown on sheet 6 to form one of the two independent DAU channels.

B-side operating power is provided by the no. 2 +28-V dc aircraft supply. Internal operation of the B-side of the DAU is identical to that described for side A on a previous page.

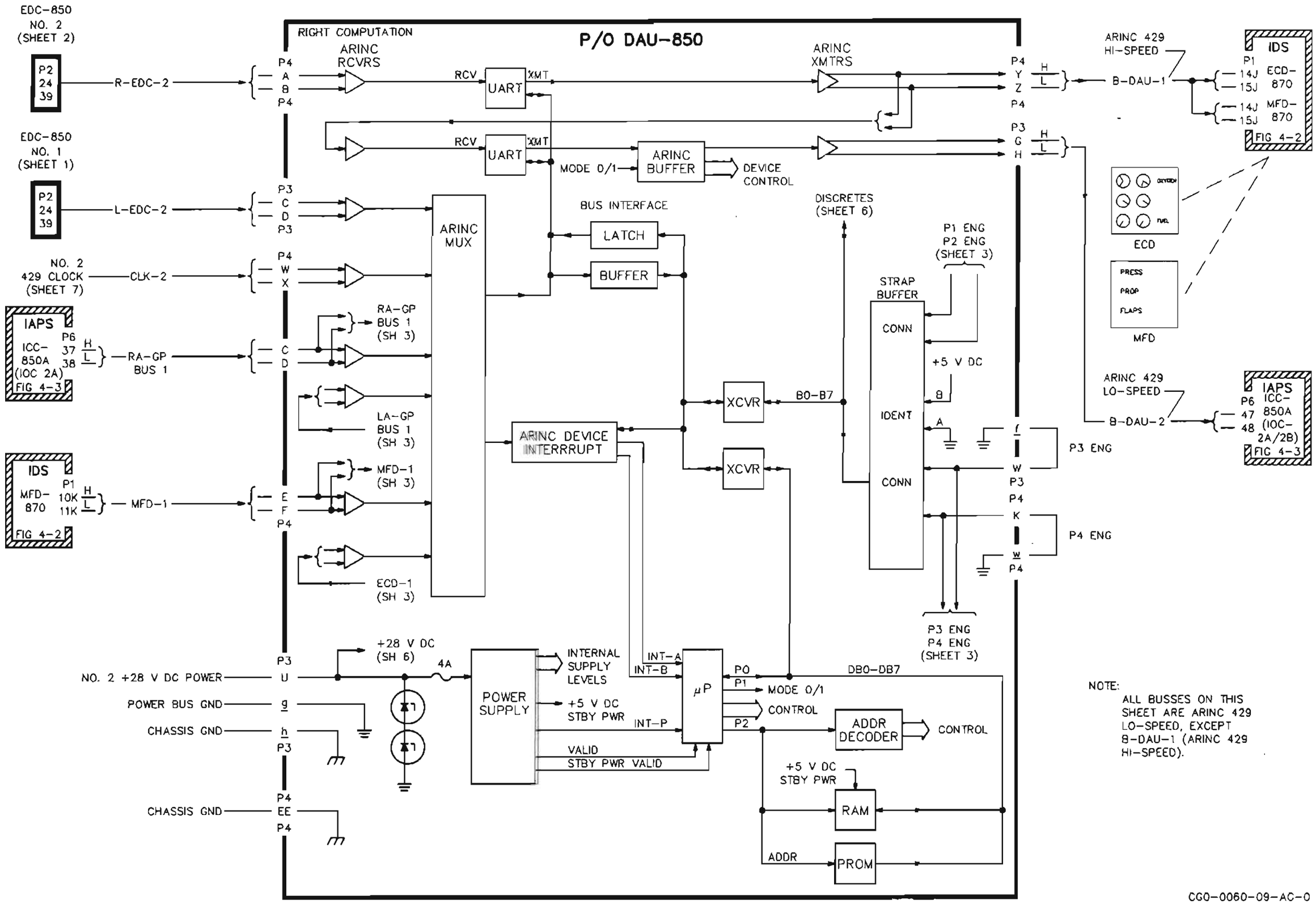

ADAS System Schematic
Figure 4-11-1 (Sheet 5 of 7)

Refer to figure 4-11-1, sheet 6. This sheet shows the DAU-850 right (B-side) discrete circuits; sheet 5 shows the right side computation circuits.

The right discrete circuit of the DAU consists of a reference and test circuit, a parallel conversion circuit, and an output driver circuit. All operating power is generated by the B-side power supply. These circuits function with those shown on sheet 5 to form one of the two independent DAU channels.

Internal operation of the B-side of the DAU is identical to that described for side A on a previous page.

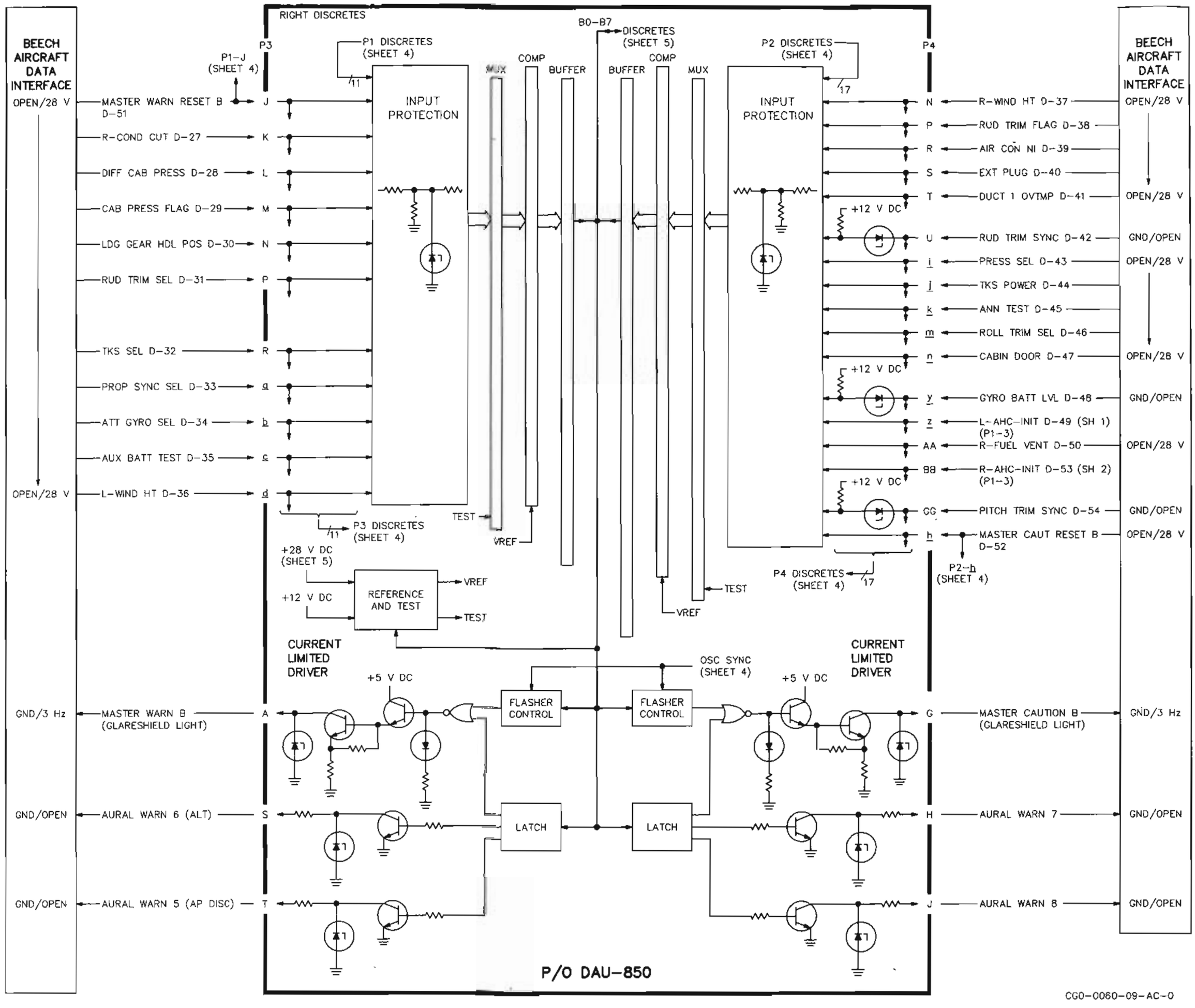

ADAS System Schematic
Figure 4-11-1 (Sheet 6 of 7)

Refer to figure 4-11-1, sheet 7. This sheet shows the no. 1 and no. 2 429 clock modules. Both modules are supplied by Beech; the I/O for these units is described here because the data bus outputs are used by the avionics system.

The no. 1 429 clock generates GMT time and date information. This data is supplied to the A-side of the DAU on the CLK-1 ARINC 429 data bus; the DAU distributes this clock data to the IDS and IAPS systems. The 429 clock derives operating power from the no. 1 +28-V dc aircraft supply. This module monitors discrete L-STRUT SW logic (aircraft on ground) and source identification strap logic (P1-1/ P1-4 is no. 1 identification). A CLOCK X-TALK BUS provides data synchronization with the other clock module.

The no. 2 429 clock generates GMT time and date information. This data is supplied to the B-side of the DAU on the CLK-2 ARINC 429 data bus; the DAU distributes this clock data to the IDS and IAPS systems. The 429 clock derives operating power from the no. 2 +28-V dc aircraft supply. This module monitors discrete R-STRUT SW logic (aircraft on ground) and source identification strap logic (P1-2/ P1-4 is no. 2 identification). A CLOCK X-TALK BUS provides data synchronization with the other clock module.

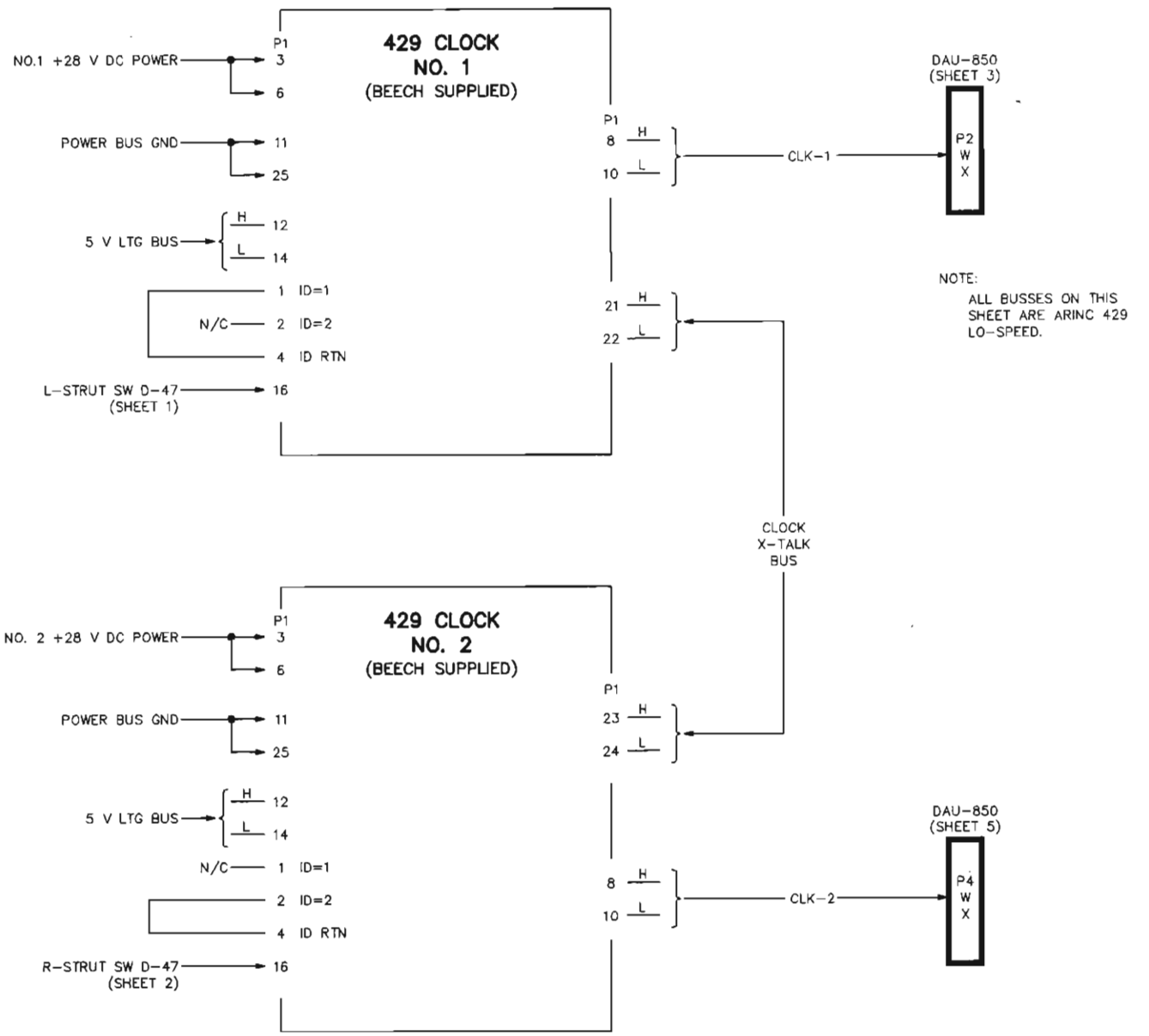

CGO-0060-09-AC-0

ADAS System Schematic
Figure 4-11-1 (Sheet 7 of 7)

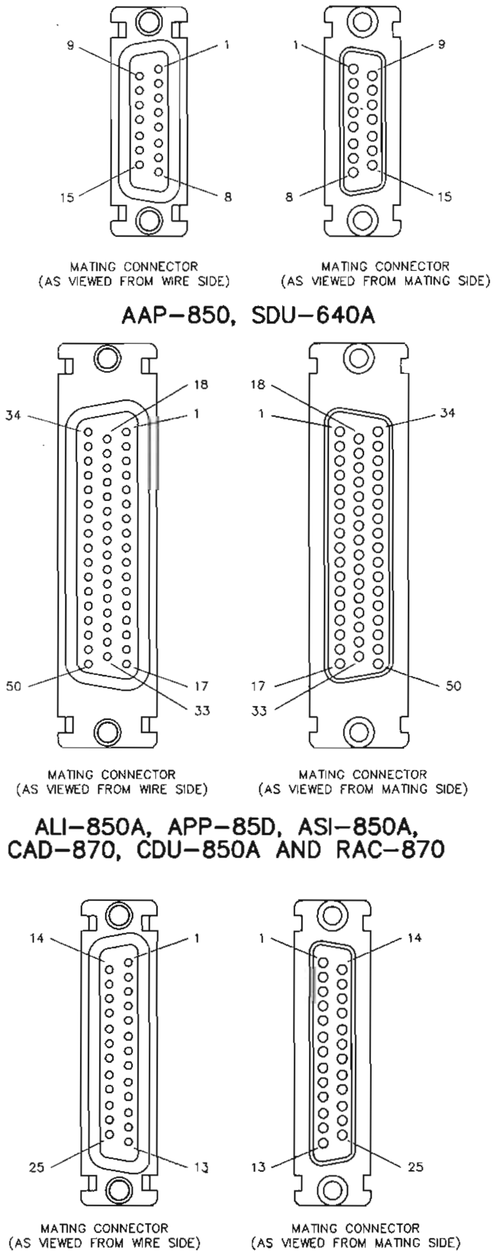

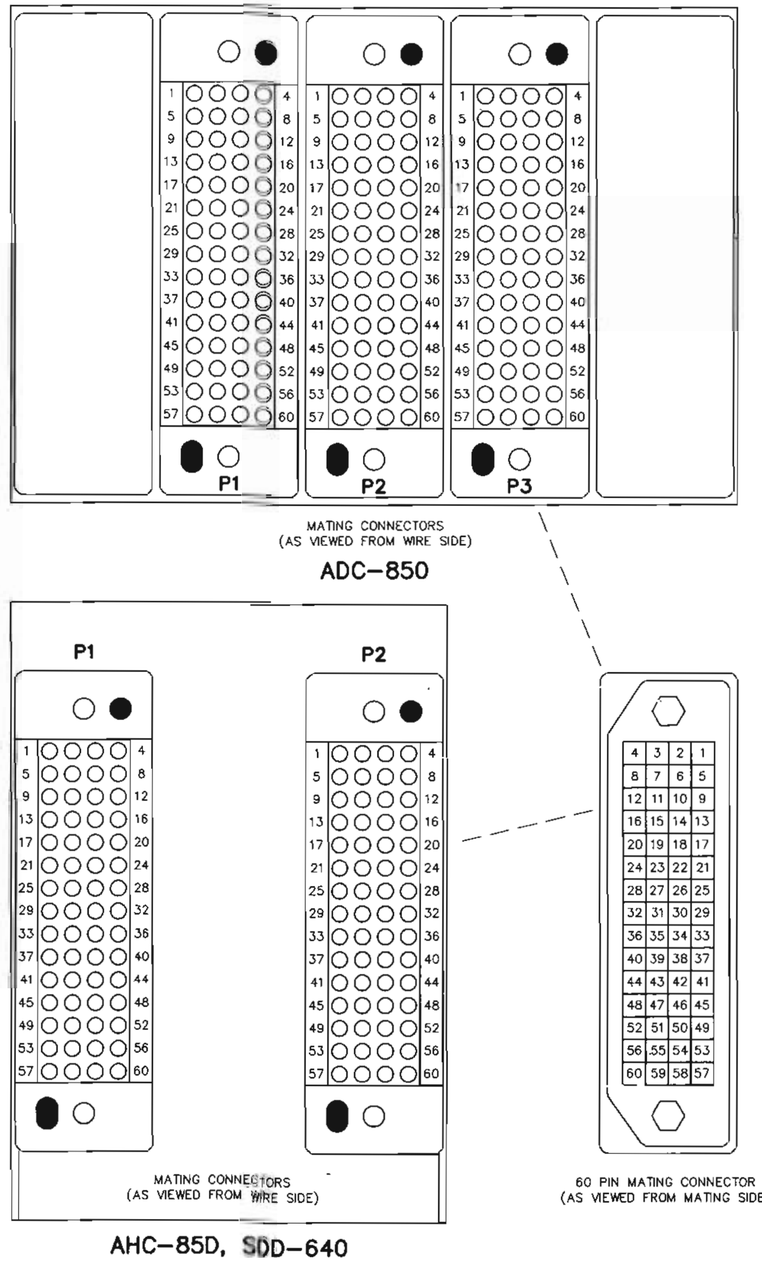

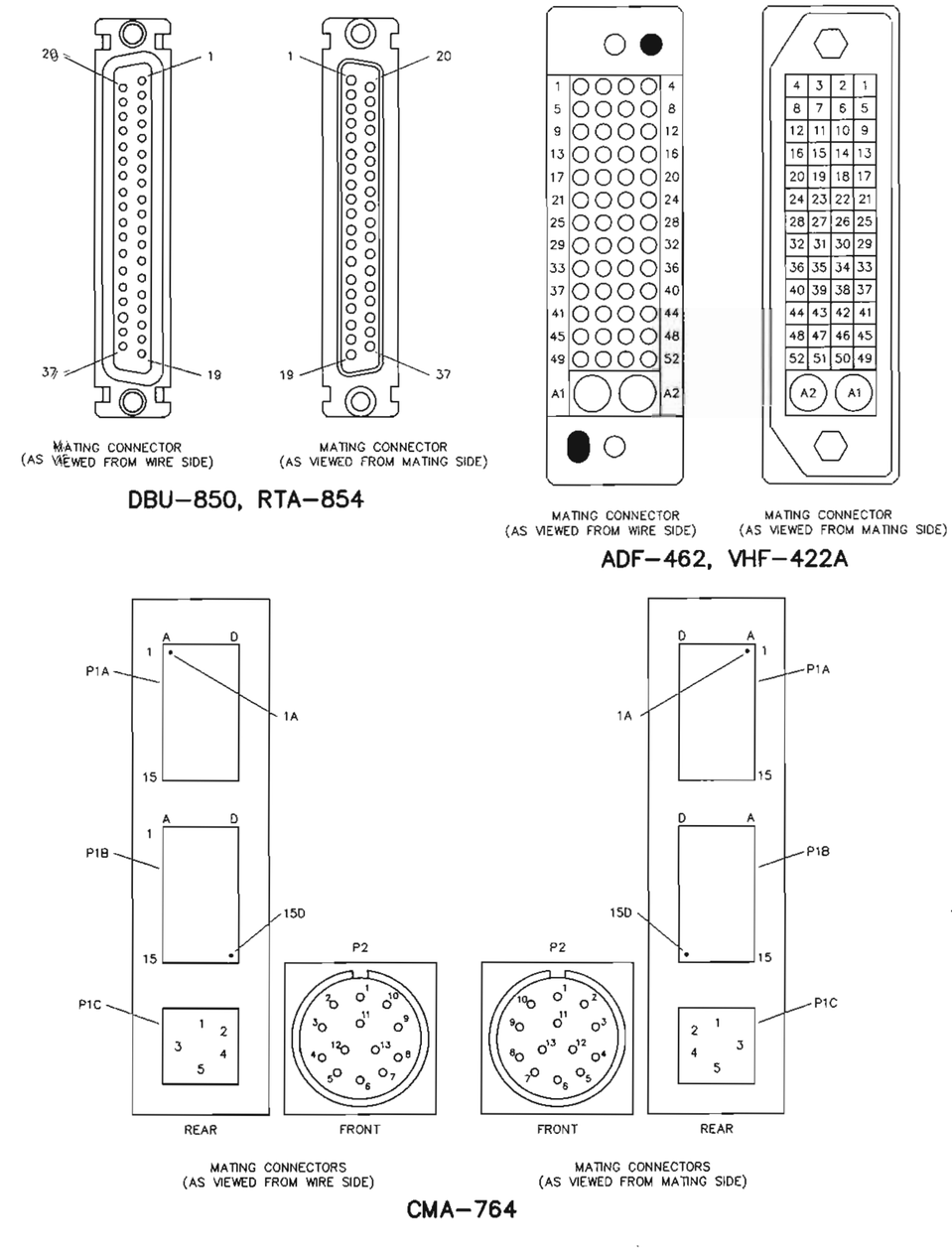

LRU Mating Connectors
Figure 4-12 (Sheet 1 of 3)

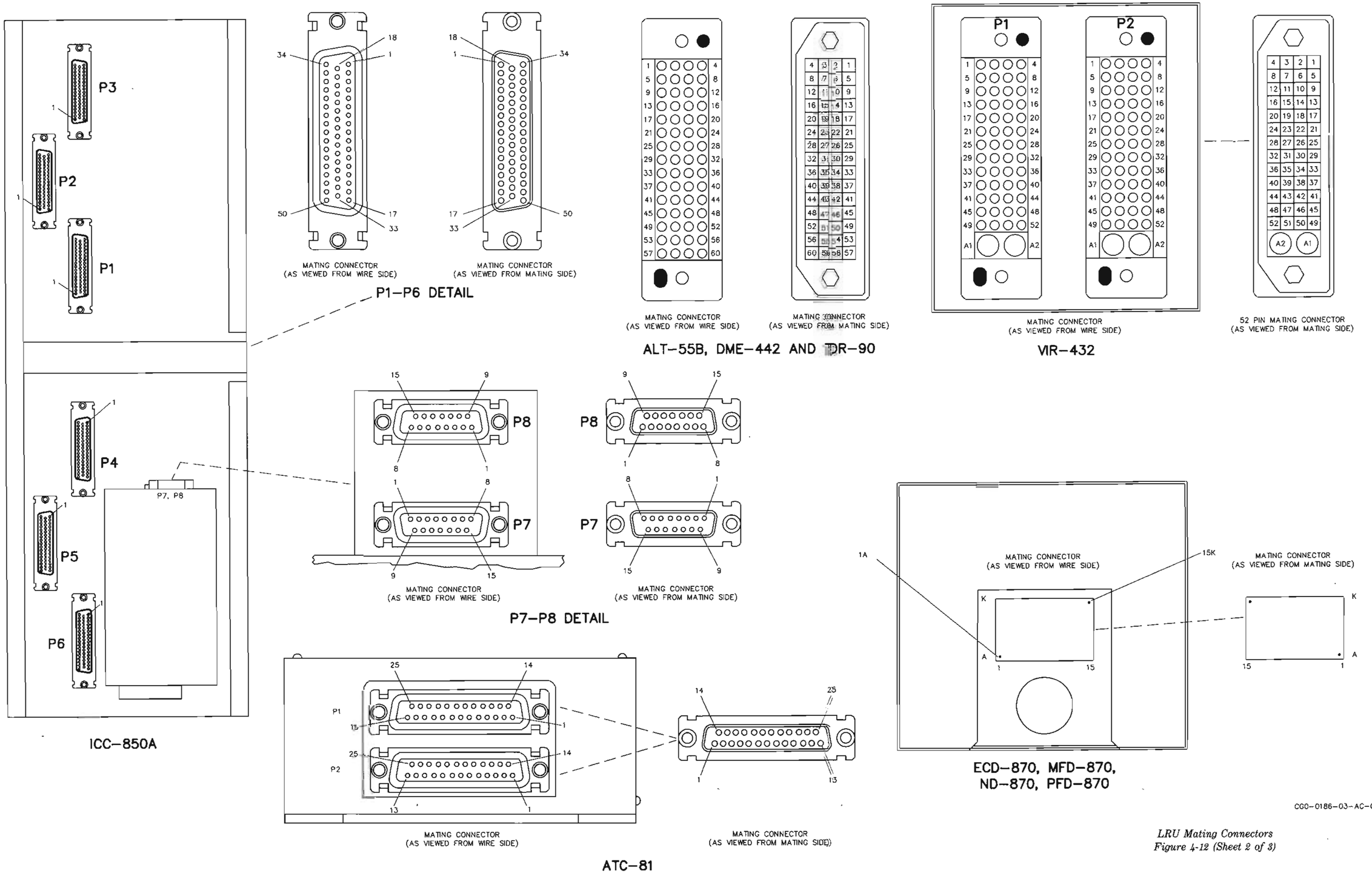

LRU Mating Connectors
Figure 4-12 (Sheet 2 of 3)

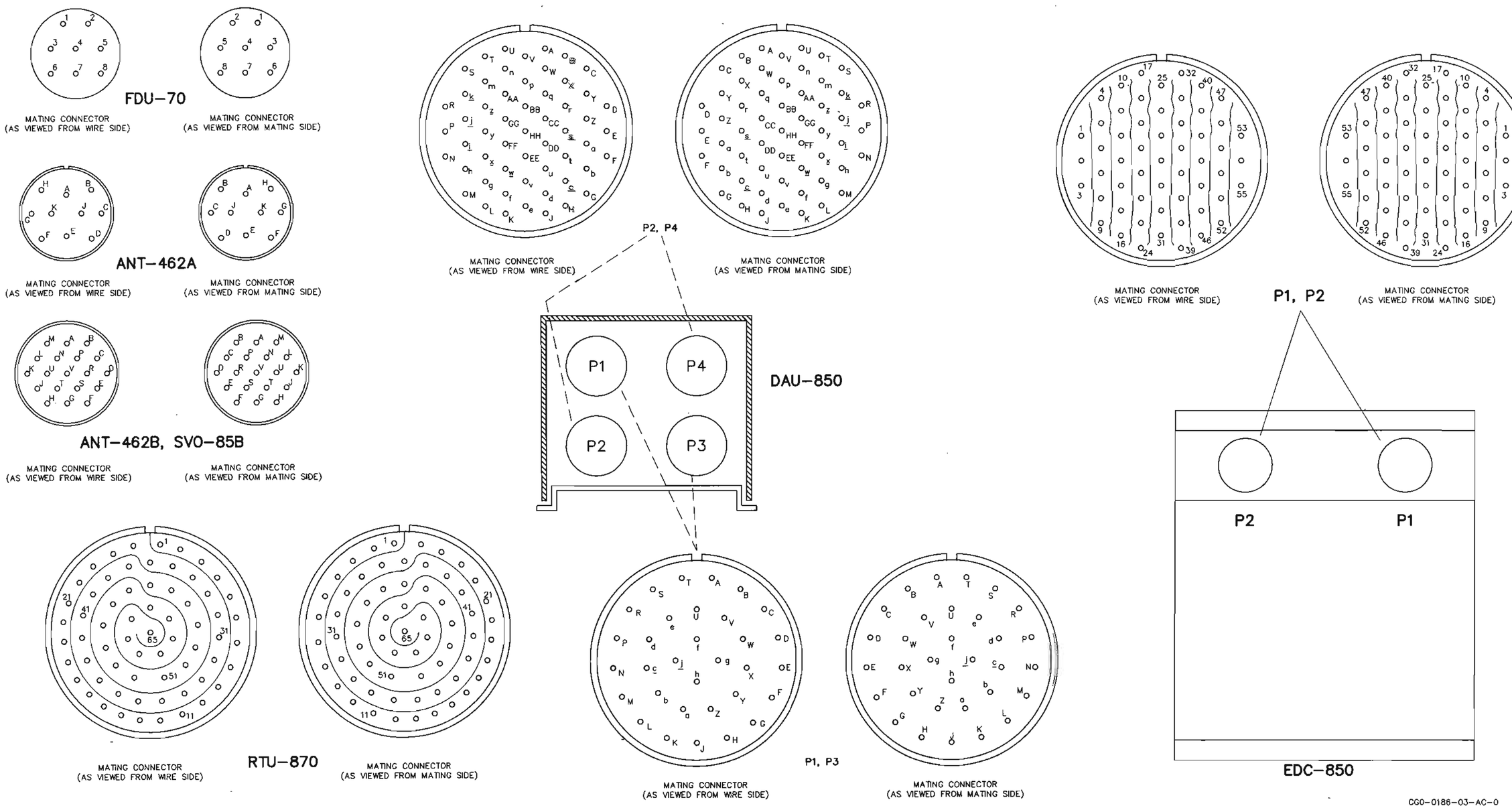

LRU Mating Connectors
Figure 4-12 (Sheet 3 of 3)

ADDENDUM 2

TO

STARSHIP 1 AVIONICS SYSTEM

SYSTEM MANUAL

PART NUMBER 523-0774076, DATED 14 JAN 1989

Insert this addendum sheet facing page 4-214 of the Theory of Operation Section of the manual

Figure 4-13 is an interconnect wiring diagram for the Starship 1 Avionics system. This figure provides the same interconnect information that is provided in the system schematic diagrams, but in a consolidated and more traditional format.

Insert this page and all sheets of (added) figure 4-13 at the end of section 4, just after the LRU connector pictorials (figure 4-12).

NOTES:

1. ALL WIRING AND COMPONENT SELECTION MUST BE IN ACCORDANCE WITH FAA AC 43.13-1A AND INDUSTRY ACCEPTED PRACTICES.
2. ALL WIRING TO BE AWG 22 UNLESS OTHERWISE NOTED.
3. WIRING IDENTIFICATION MAY BE ASSIGNED AT DISCRETION OF INSTALLATION AGENCY.
4. CIRCUIT BREAKERS, TERMINAL STRIPS AND ASSOCIATED HARDWARE MAY BE SELECTED TO MATCH LIKE COMPONENTS OF THE INDIVIDUAL AIRCRAFT.
5. LRU LOCATION IDENTIFICATION DISCRETES SHALL USE THE FOLLOWING CONVENTION:
   OPEN = LEFT, PILOTS, NO.1
   GROUND = RIGHT, COPILOTS, NO.2
6. CONDUCTORS SHOULD BE TERMINATED AS SHOWN TO THE ICC-858A AT CONNECTOR P1. ADDITIONALLY, THE ENTIRE HARNESS BETWEEN THE DEU-858 AND ICC-858A SHOULD BE SHEATHED IN CONDUCTIVE SLEEVING PER STANDARD WIRE AND CABLE CORP PART NUMBER D2582 OR EQUIVALENT. TERMINATE SLEEVING TO THE CONNECTOR SHELL AT THE ICC-858A END AND TO PIN 10 OF THE DEU-858 CONNECTOR.
7. UNLESS OTHERWISE NOTED, ALL INTERCONNECTING SHIELDED WIRES BETWEEN LRU'S SHALL HAVE THEIR SHIELDS INDIVIDUALLY TERMINATED TO AIRFRAME GROUND EXTERNAL TO THE LRU'S FOR ADDED LIGHTNING PROTECTION. ALL GROUND LEADS SHOULD BE AS SHORT AS POSSIBLE AND SHOULD TERMINATE NEAR THE CONNECTOR ON THE METAL MOUNTING SURFACE.
8. LIGHTNING PROTECTIVE DEVICES (MOV'S) ARE INSTALLED ON THE CONNECTOR BACKPLATES OF THE FOLLOWING UNITS:
   ADF-462, ALT-55B, DME-442, TDR-90, VHF-422,VIR-432 AND SDU-640
   SEE COLLINS DOCUMENT PART NUMBER 653-2132-001 FOR MORE DETAIL.
   REFER TO VENDOR SPECIFICATIONS FOR NON-COLLINS EQUIPMENT.
9. THE PARITY GROUND WIRE MUST BE A SEPARATE WIRE TO GROUND; IT CANNOT BE DAISY CHAINED OR TIED TO ANY OTHER EXISTING WIRE.

   STRAP FOR ORIENTATION IN AIRPLANE:

FRONT OF UNIT FACING	P1-33	P1-34	P1-56	P1-48
LEFT	TO P1-37	TO P1-21	GND	OPEN
RIGHT	OPEN	OPEN	GND	GND
FORWARD	OPEN	TO P1-21	OPEN	GND
AFT	TO P1-37	OPEN	OPEN	GND

10. OPTIONAL OUTPUT FOR VISUAL/AURAL ALTITUDE ALERTER.
11. FOR DUAL ADF INSTALLATION WITH ANT-462B LOOP ANTENNA, DELETE ALL CONNECTIONS TO ANT-462A P1.
12. FOR SINGLE ADF INSTALLATIONS WITH ANT-462A LOOP ANTENNA, DELETE ALL CONNECTIONS TO ANT-462B AND NO.2 ADF-462.
13. BOND EACH END OF OUTER SHIELD OF TRIAXIAL CABLE (TIMES, TR-68 OR EQUIVALENT) TO AIRCRAFT GROUND. THE INNER SHIELD IS CONNECTED AS SHOWN TO THE PINS OF THE ANT-462A/B AND COAXIAL CONTACT AT THE ADF-462 RECEIVER. DO NOT CONNECT INNER SHIELD OF TRIAXIAL CABLE TO AIRCRAFT GROUND.
14. CONNECTIONS SHOWN ARE FOR BOTTOM MOUNTED ANT-462A/B. FOR TOP MOUNTED ANTENNA, CONNECT ADF-462 P1-19 TO GROUND.

NOTES (CONTINUED):

15. THE FOLLOWING CHARTS DEFINE THE IAPS PROGRAM STRAPPABLE OPTIONS THAT CAN BE SELECTED BY OPENING OR GROUNDING THE PROPER PIN OF THE DESIRED FUNCTION(S). THE LEFT AND RIGHT PROGRAM CONNECTORS, LOCATED IN THE MIDDLE OF EACH HALF OF THE ICC-858A, ARE MATED WITH 50-PIN, CANNON D CONNECTORS (CPN 371-0373-030). PINS 45 THROUGH 50 ARE PROVIDED AS GROUND POINTS FOR OPTIONS REQUIRING THAT CONDITION. GROUND EQUALS ZERO (GND=0) AND OPEN EQUALS ONE (OPEN=1). SELECTION TABLE OPTIONS NOT SHOWN ARE TBD.

    STRAPPING OPTIONS ARE DIVIDED INTO TWO WORD GROUPS OF 16 BITS EACH. WORD PARITY FOR EACH GROUP OF SELECTIONS MUST BE ODD. PARITY BIT STRAPING IS DETERMINED BY COUNTING UP THE NUMBER OF ONES (OPEN=1) IN EACH WORD, DEPENDING ON THE COMBINATION OF CHOSEN OPTIONS FROM THE TABLE, AND FORCING THE TOTAL TO ALWAYS BE ODD BY MEANS OF THE WORD PARITY BIT. (FOR EXAMPLE, IF ALL OF THE SELECTIONS FROM COLUMN ONE OF THE TABLE WERE TRUE FOR WORD NO.1, THEN THE PARITY BIT SHOULD BE OPEN (OPEN=1) TO MAINTAIN ODD PARITY, THE TOTAL OF ONES EQUALING 8. IF ALL COLUMN 2 SELECTIONS WERE MADE, THE PARITY BIT SHOULD BE GND (GND=0) FOR A TOTAL OF 11.)

WORD GROUP I

OPTION	PROGRAM LEFT (A1J13)	PROGRAM RIGHT (A1J14)	SELECTION TABLE		
LRN TYPE 0	10	10	0	1	
1	33	33	0 NO LRN	0 CMA-764	
2	36	36	0	0	
SNGL/DUAL INSTR	37	37	0 SINGLE	1 DUAL	
DME	28	28	0 SINGLE	1 DUAL	
ADF	35	35	0 SINGLE	1 DUAL	
ADC	12	12	0 SINGLE	1 DUAL	
FD INSTL	26	26	0 SINGLE	1 DUAL	
RA TYPE 0	25	25	0 ALT-55B	1 TBD	
1	22	22	0	0	
AHRS/INS INSTR	8	8	0 AHRS	1 INS	
3RD COMM INSTR	7	7	0 NOT USED	1 INSTALLED	
FMS CONFIG	23	23	0 DUAL FMC	1 SNGL FMC	
FMS CONFIG	5	5	0 SNGL CDU	0 DUAL CDU	
WXR ADAPTER	24	24	0 RTA-854	1 RTA-854 ADAPTER	
WD1 PARITY	40	40	(ODD,GND=0,OPEN=1)		

WORD GROUP II

OPTION	PROGRAM LEFT (A1J13)	PROGRAM RIGHT (A1J14)	SELECTION TABLE		
XSIDE NAV	9	9	0 INHIBIT	1 ALLOW	
VNAV MODE	34	34	0 INHIBIT	1 ALLOW	N/A
FD XFER	15	15	0 INHIBIT	1 ALLOW	
VBAR/XPTR	14	14	0 VBAR	1 XPTR	
BCR PTR 0	13	13	0 NO BRG	1 1 BRG PTR	0 2 BRG PTR
1	43	43	0	0	1
FAST/SLOW 0	11	11	0 NOT USED	1 FAST/SLOW	N/A
1	6	6	0	0	
CERT 0	44	44	0 TBD	1 TBD	N/A
1	42	42	0	0	
MLS	41	41	0 NO MLS	1 SNGL MLS	N/A
MLS	31	31	0	0	
WD2 SPARE 3	38	38	1 (OPEN)		
WD2 SPARE 4	29	29	1		
WD2 SPARE 5	32	32	1		
WD2 PARITY	39	39	(ODD,GND=0,OPEN=1)		
GROUND	50	50	N/A		
GROUND	49	49			
GROUND	48	48			
GROUND	47	47			
GROUND	46	46			
GROUND	45	45			

NOTES (CONTINUED):

FD STEERING TRANSFER OPERATION SHOULD BE INHIBITED. THIS FUNCTION IS UNDEFINED AT PRESENT.

FCC-858 CONFIGURATION STRAPPING IS AN INDEPENDENT FUNCTION OF THE IAPS PROGRAM STRAPPABLE OPTIONS. DO NOT INCLUDE ITS SELECTIONS IN THE PARITY COUNT OF EITHER PROGRAM WORD.

OPTION	PROGRAM LEFT (A1J13)	PROGRAM RIGHT (A1J14)	LEFT	RIGHT
FCC CONFIG 1	1	1	1	1
FCC CONFIG 2	3	3	1	1
FCC CONFIG 3	10	10	1	1
FCC CONFIG 4	2	2	1	1
FCC CONFIG 5	20	20	1	1
FCC CONFIG 6	19	19	1	1
FCC CONFIG 7	4	4	0	1
FCC CONFIG 0	21	21	0	0
			(GND=0,OPEN=1)	

16. RADAR HIGH SPEED BUS MUST BE PROGRESSIVELY DAISY CHAINED FROM THE WXR SOURCE TO EACH INDIVIDUAL LOAD. THE BUS MUST NOT BE DISTRIBUTED FROM A COMMON TERMINAL POINT. WHEN THE LAST POINT IS REACHED IN THE CHAIN, A 78 OHM 10W RESISTOR MUST BE INSTALLED ACROSS THE BUS AS CLOSE AS POSSIBLE. WIRE TYPE CPN 425-0215-020, RAYCHEM P/N 10599 OR EQUIVALENT MUST BE USED FOR DISTRIBUTION OF THIS 453 HIGH SPEED BUS.
17. PIN 16 MUST BE TIED TO A HARD GROUND IF THE REMOTE ON/OFF FUNCTION IS NOT USED.
18. THE STRAPPING SHOWN PROVIDES AN AIRCRAFT INSTALLATION DELAY OF 40 FT. FINAL STRAPPING CONFIGURATION TO BE DETERMINED BY FLIGHT TESTING.
19. IF AIRCRAFT AUDIO SYSTEM CONTAINS AUDIO COMPRESSOR, DEFEAT VHF-422A RECEIVER AUDIO COMPRESSOR BY GROUNDING PIN 9.
20. BEECH OPTION TO HOOK AP DISC ANNUNCIATION OUTPUTS IN PARALLEL.
21. MISTRIM INDICATOR: VALUE OF RESISTOR IS DETERMINED DURING CERTIFICATION; REFER TO ACFT SIL'S FOR VALUES.
22. SERVO CAPSTAN ROTATION: PITCH UP CMD - CW
    ROLL RT CMD - CCW
    YAW LT CMD - CW

SVO-86

	P1 (CW)	P1 (CCW)
ENG CLUTCH (+)	( )	( )
ENG CLUTCH (-)	( )	( )
SERVO GND	P	P
MOTOR A	A	B
MOTOR B	B	A
RATE A (H)	J	K
RATE A (C)	H	L
RATE B (H)	K	J
RATE B (C)	L	H

23. REFER TO PROLINE II/-4XX INSTALLATION MANUAL FOR FURTHER INFORMATION ON COM/NAV/PULSE UNITS, CPN 523-0773-900.
24. GROUND EQUALS EQUIPMENT INSTALLED.
25. GROUND CONNECTOR SHELL TO AIRCRAFT WITH A STRAP LESS THAN 6.0 INCHES IN LENGTH.

PARTS LIST

REF DES	TYPE NO.	DESCRIPTION	NOTES
1AAP	AAP-850	ALT AWARENESS PANEL	KEY 12
1ADC	ADC-850	AIR DATA COMPUTER	
1ADI	PFD-070	PRIMARY FLIGHT DISPLAY	
1AFA	ANT-462A	ADF-ANTENNA (SINGLE)	
1AFR	ADF-462	ADF RECEIVER	
1AHC	AHC-85D	ATTITUDE HEADING COMPUTER	
1ALI	ALI-858A	ALTIMETER	KEY 17, 34
1ASI	ASI-858A	AIRSPEED INDICATOR	KEY 1, 50
1CDU	CDU-858A	CONTROL DISPLAY UNIT	KEY 24, 45
1CLK		429 CLOCK	
1FCD	FBU-70	FLUX DETECTOR	
1DMA		DME ANTENNA	
1DMR	DME-442	DME RECEIVER/TRANSMITTER	
1EDC	EDC-850	ENG DATA CONCENTRATOR	
1FCP	MSP-858A	MODE SELECT PANEL	KEY 12, 14
1GLA		GLIDESLOPE ANTENNA	
1HSI	ND-870	NAV DISPLAY	
1MKA		MARKER BEACON ANTENNA	
1RAA	ALT-52	RADIO ALT ANTENNA (RCV)	
1RAC	RAC-070	RADIO ALT CONVERTER	KEY 16, 35
1RAR	ALT-55B	RADIO ALTIMETER	
1RAX	ALT-52	RADIO ALT ANTENNA (XMT)	
1RTU	RTU-070	RADIO TUNING UNIT	
1SDU	SDU-640A	SENSOR DISPLAY UNIT	KEY 1, 15
1TAD	CAD-070	CONVERTER ANALOG/DIGITAL	KEY 1, 34
1TDA		TRANSPONDER ANTENNA	
1TDR	TDR-90	TRANSPONDER	
1VHA		COMM ANTENNA	
1VHR	VHF-422A	VHF COMM TRANSCEIVER	
1VLA		NAV ANTENNA	
1VLR	VIR-432	NAV RECEIVER	
2AAP	AAP-850	ALT AWARENESS PANEL	KEY 12
2ADC	ADC-850	AIR DATA COMPUTER	
2ADI	PFD-070	PRIMARY FLIGHT DISPLAY	
2AFR	ADF-462	ADF RECEIVER	
2AHC	AHC-85D	ATTITUDE HEADING COMPUTER	
2ALI	ALI-858A	ALTIMETER	KEY 17, 34
2ASI	ASI-858A	AIRSPEED INDICATOR	KEY 1, 50
2CDU	CDU-858A	CONTROL DISPLAY UNIT	KEY 24, 45
2CLK		429 CLOCK	
2FCD	FBU-70	FLUX DETECTOR	
2DMA		DME ANTENNA	
2DMR	DME-442	DME RECEIVER/TRANSMITTER	
2EDC	EDC-850	ENG DATA CONCENTRATOR	
2FCP	MSP-858A	MODE SELECT PANEL	KEY 12, 14
2GLA		GLIDESLOPE ANTENNA	
2HSI	ND-870	NAV DISPLAY	
2MKA		MARKER BEACON ANTENNA	
2RAC	RAC-070	RADIO ALT CONVERTER	KEY 16, 35
2RTU	RTU-070	RADIO TUNING UNIT	
2SDU	SDU-640A	SENSOR DISPLAY UNIT	KEY 1, 15
2TAD	CAD-070	CONVERTER ANALOG/DIGITAL	KEY 1, 34

PARTS LIST (CONTINUED)

REF DES	TYPE NO.	DESCRIPTION	NOTES
2TDA		TRANSPONDER ANTENNA	
2TDR	TDR-90	TRANSPONDER	
2VHA		COMM ANTENNA	
2VHR	VHF-422A	VHF COMM TRANSCEIVER	
2VLA		NAV ANTENNA	
2VLR	VIR-432	NAV RECEIVER	
ACH		VLF ANTENNA COUPLER	
AFA	ANT-462A	ADF ANTENNA (DUAL)	
APP	APP-85D	AUTOPILOT PANEL	KEY 2, 49
ATC	ATC-81	AUTO TRIM COUPLER	
CB100		CIRCUIT BREAKER, 3A	1TDR, +28VDC
CB104		CIRCUIT BREAKER, 3A	2TDR, +28VDC
CB145		CIRCUIT BREAKER, 3A	ALT, +28VDC
CB200		CIRCUIT BREAKER, 10A	1VHF, +28VDC
CB201		CIRCUIT BREAKER, 3A	1VIR, +28VDC
CB202		CIRCUIT BREAKER, 3A	1DME, +28VDC
CB203		CIRCUIT BREAKER, 2A	1ADF, +28VDC
CB204		CIRCUIT BREAKER, 3A	1ADC, +28VDC
CB205		CIRCUIT BREAKER, 3A	1AHC, +28VDC
CB206			
CB207		CIRCUIT BREAKER, 7.5A	FCS-1, +28VDC
CB208		CIRCUIT BREAKER, 5A	1RTU, +28VDC
CB209		CIRCUIT BREAKER, 5A	1ASI, +28VDC
CB210		CIRCUIT BREAKER, 5A	1ALI, +28VDC
CB211		CIRCUIT BREAKER, 7.5A	1FMS, +28VDC
CB212		CIRCUIT BREAKER, 3A	1SDU, +28VDC
CB213		CIRCUIT BREAKER, 3A	DAU-A, +28VDC
CB214		CIRCUIT BREAKER, 2A	1EDC-A, +28VDC
CB215		CIRCUIT BREAKER, 2A	2EDC-B, +28VDC
CB216		CIRCUIT BREAKER, 5A	1VLF, +28VDC
CB217		CIRCUIT BREAKER, 3A	1CDU, +28VDC
CB218		CIRCUIT BREAKER, 7.5A	WRT, +28VDC
CB219		CIRCUIT BREAKER, 10A	1ADI, +28VDC
CB220		CIRCUIT BREAKER, 3A	1ADC STBY, +28VDC
CB221		CIRCUIT BREAKER, 3A	1AHC STBY, +28VDC
CB222		CIRCUIT BREAKER, 3A	1CLK, +28VDC
CB223		CIRCUIT BREAKER, 10A	1HSI, +28VDC
CB224		CIRCUIT BREAKER, 10A	MFD, +28VDC
CB225		CIRCUIT BREAKER, 10A	ECA, +28VDC
CB300		CIRCUIT BREAKER, 10A	2VHF, +28VDC
CB301		CIRCUIT BREAKER, 3A	2VIR, +28VDC
CB302		CIRCUIT BREAKER, 3A	2DME, +28VDC
CB303		CIRCUIT BREAKER, 2A	2ADF, +28VDC
CB304		CIRCUIT BREAKER, 3A	2ADC, +28VDC
CB305		CIRCUIT BREAKER, 3A	2AHC, +28VDC
CB306			
CB307		CIRCUIT BREAKER, 7.5A	FCS-2, +28VDC
CB308		CIRCUIT BREAKER, 5A	2RTU, +28VDC
CB309		CIRCUIT BREAKER, 5A	2ASI, +28VDC
CB310		CIRCUIT BREAKER, 5A	2ALI, +28VDC
CB311		CIRCUIT BREAKER, 7.5A	2FMS, +28VDC
CB312		CIRCUIT BREAKER, 3A	2SDU, +28VDC
CB313		CIRCUIT BREAKER, 3A	DAU-B, +28VDC

Interconnect Wiring Diagram
Figure 4-13 (Sheet 1 of 15)

BEECH MODEL 2000 AVIONICS SYSTEM DESIGN SPECIFICATION

VOLUME DIRECTORY

SECTION		VOLUME	PART NUMBER
1.0	SCOPE	1	634-4987-001
2.0	SYSTEM REQUIREMENTS	1	634-4987-001
3.0	SYSTEM ARCHITECTURE	1	634-4987-001
4.0	LRU REQUIREMENTS		
4.1	INTEGRATED DISPLAY SYSTEM	4.1	634-4990-001
4.2	INTEGRATED AVIONICS PROCESSOR SYSTEM	4.2	634-4991-001
4.3	AIR DATA SYSTEM	4.3	634-4992-001
4.4	ATTITUDE HEADING SYSTEM	4.4	634-4993-001
4.5	FLIGHT CONTROL SYSTEM	4.5	634-4994-001
4.6	FLIGHT MANAGEMENT SYSTEM	4.6	634-4995-001
4.7	COMMUNICATIONS SYSTEM	4.7	634-4996-001
4.8	NAVIGATION SYSTEM	4.8	634-4997-001
4.9	WEATHER RADAR SYSTEM	4.9	634-4998-001
4.10	INSTALLATION EQUIPMENT	4.10	634-4999-001
4.11	AIRCRAFT DATA ACQUISITION SYSTEM	4.11	634-0287-001
5.0	SYSTEM VERIFICATION	1	634-4987-001
6.0	QUALITY ASSURANCE REQUIREMENTS	1	634-4987-001
7.0	RELIABILITY REQUIREMENTS	1	634-4987-001
8.0	MAINTAINABILITY REQUIREMENTS	1	634-4987-001
9.0	SYSTEM PARAMETER DICTIONARY	2	634-4988-001
10.0	SYSTEM INTERCONNECT	3	634-4989-001

FUNCTIONAL SHEET INDEX	
NOTES, PARTS LIST	SHEETS 1,2
FLIGHT CONTROL SYSTEM	SHEETS 3,4,14
ATTITUDE HEADING SYSTEM	SHEET 4
INTEGRATED DISPLAY SYSTEM	SHEETS 5,6
AIRCRAFT DATA ACQUISITION SYSTEM	SHEETS 6,7
COMMUNICATIONS SYSTEM, FLIGHT MANAGEMENT SYSTEM, WEATHER RADAR SYSTEM	SHEETS 8,9
AIR DATA SYSTEM	SHEET 10
NAVIGATION SYSTEMS	SHEET 11
TRANSPONDER, RADIO ALTIMETER & AAP	SHEET 12
COMMUNICATION SYSTEM & ADF	SHEET 13

PARTS LIST (CONTINUED FROM SHEET 1)

REF DES	TYPE NO.	DESCRIPTION	NOTES
CB314		CIRCUIT BREAKER, 2A	2EDC-B, +28VDC
CB315		CIRCUIT BREAKER, 2A	1EDC-B, +28VDC
CB317		CIRCUIT BREAKER, 3A	2CDU, +28VDC
CB319		CIRCUIT BREAKER, 10A	2ADI, +28VDC
CB320		CIRCUIT BREAKER, 3A	2ADC STBY, +28VDC
CB321		CIRCUIT BREAKER, 3A	2AHC STBY, +28VDC
CB322		CIRCUIT BREAKER, 3A	2CLK, +28VDC
CB323		CIRCUIT BREAKER, 10A	2HSI, +28VDC
DAU	DAU-850	DATA ACQUISITION UNIT	
DBU	DBU-850	DATA BASE UPDATER	KEY 20, 37
DS200		TRIM FAIL "A" ANNUN	
DS201		TRIM FAIL "B" ANNUN	
ECA	ECD-870	ENGINE/CAUTION DISPLAY	
HCP	CHP-850	HEADING COURSE PANEL	KEY 10
ICC	ICC-850A	IAPS UNIT	KEY *
MFD	MFD-870	MULTIFUNCTION DISPLAY	
PSV	SVO-85C	PITCH SERVO	-004 PENDENT CABLE
R1		RADAR LOAD	78 OHM
RSV	SVO-85A	ROLL SERVO	-001
S1		PB DP MOM NC	PIL AP DISC
S2		PB DP MOM NC	COPIL AP DISC
S200		DPDT ON-OFF-ON	PIL HSI/ADI ONLY
S201		DPDT ON-NONE-ON	PIL MFD/NORM
S202		SPDT ON-NONE-ON	PIL X-CDU
S203		SPDT ON-NONE-ON	PIL X-AHRS
S204		SPDT ON-NONE-ON	PIL MB/MG
S205		SPDT ON-NONE-ON	PIL FL100 ANN DIS
S206		SPDT ON-NONE-ON	PIL OVSPD RLY TEST
S207		DPDT ON-OFF-ON	1RTU ENG DATA/DISABLE
S208		DPDT ON-OFF-ON	2RTU ENG DATA/DISABLE
S209		DPDT ON-OFF-ON	COPIL HSI/ADI ONLY
S210		SPDT ON-NONE-ON	COPIL X-CDU
S211		SPDT ON-NONE-ON	COPIL X-AHRS
S212		SPDT ON-NONE-ON	COPIL MB/MG
S213		SPDT ON-NONE-ON	COPIL FL100 ANN DIS
S214		SPDT ON-NONE-ON	COPIL OVSPD RLY TEST
S215		PB SP MOM NO	LINE ADVANCE
S216		PB SP MOM NO	PAGE ADVANCE
S3		PB DP MOM NO	PIL GO AROUND
S4		PB DP MOM NO	COPIL GO AROUND
S5		PB SP MOM NO	PIL SYNC
S6		PB SP MOM NO	COPIL SYNC
S7			PIL MANUAL TRIM
S8			COPIL MANUAL TRIM
SDD	SDD-640A	SENSOR DISPLAY DRIVER	
TTP	129F	TOTAL TEMP PROBE	ROSEMOUNT
VLF	CNA-764	VLF/OMEGA RECEIVER	CANADIAN MARCONI
WXR	RTA-854	WEATHER RADAR	
YSV	SVO-85B	YAW SERVO	-002 PENDANT CABLE

* J1-7,37; J2-4,39; J3-1,2; J4-1,58; J5-18,39; J6-49,58; J7-3,6; J8-9,12

BEECH STARSHIP 2000 MATING CONNECTOR EQUIPMENT LIST

UNIT	QTY/SS	MATING CONN P/N	VENDOR/MIL-STD P/N	BACKSHELL/STR REL	CONTACTS
ASI-850A	2	371-0322-050	DCU-50S-F0	371-0187-00/+0040-010	371-0346-040/060
AAP-850	2	371-0322-020	DCU-15S-F0	371-0389-250	371-0346-040/060
ADC-850 J1-J3	2	634-1021-001	KIT CPN (2 REQ)		372-2514-110/100
ADF-462	2	634-1022-001	KIT CPN		372-2514-110/100
ADF-462 J1					COAX 372-2519-040
AHC-850 J1	2	634-3024-001	KIT CPN		372-2514-110/100
AHC-850 J2		634-3024-001	KIT CPN		372-2514-110/100
ALI-850A	2	371-0322-050	DCU-50S-F0	371-0187-00/+0040-010	371-0346-040/060
ALT-550	1	634-1021-001	KIT CPN		372-2514-110/100
ALT-550 J1,J2	1	357-7204-010			
ANT-62	2	357-7204-010	TNC 301-T1100		
ANT-425	1	357-7990-001	MS3126F12-10S		359-0032-020
ANT-620		371-6470-000			
APP-850	1	371-0322-050	DBU-50S-F0	371-0187-00/+0040-040	371-0346-040/060
ATC-81	1	371-0322-030	DBU-25S-F0	371-0187-00/+0040-040	371-0346-040/060
CAB-870	2	371-0322-050	DDU-50S-F0	371-0389-290	371-0346-040/060
CDU-850A	2	371-0322-050	DDU-50S-F0	371-0187-00/+0040-040	371-0346-040/060
CHP-850	1	371-0322-030	DBU-25S-F0	371-0389-260	371-0346-040/060
CLOCK	2	371-0322-030	DBU-25S-F0	371-0389-260	371-0346-040/060
CNA-764 2J1-A,B,C	1		ARINC 600 SIZE 1	359-0637-020	370-0045-000
2J2		359-0640-040	MS27467T11F35P	MS27656F18-2	359-0080-XXX
ANT CPLR 1P1	1	357-7990-001	MS3126F12-10S		359-0032-020
DAU-850 J1	1	359-0301-400	MS3126F18-32S	377-2476-000	359-0032-020
DAU-850 J2		359-0301-640	MS3126F22-55S	371-6225-000	359-0032-020
DAU-850 J3		359-0301-410	MS3126F18-32SW	371-2477-000	359-0032-020
DAU-850 J4		359-0301-650	MS3126F22-55SW	371-6226-000	359-0032-020
DBU-850	1	371-0322-040	DCU-37S-F0	371-0389-270	371-0346-040/060
DME-442	2	634-1021-001	KIT CPN		372-2514-110/100
DME-442 J1		357-9666-000	TNC		
EDC-850 J1	1	359-0680-170	D38999/26CE35SA	GENAIR 450HS001M17	359-0680-140
EDC-850 J2		359-0680-180	D38999/26CE35SB	GENAIR 450HS001M17	359-0680-140
EFD-870	6	370-0076-030			370-0066-050
FDU-70	2	634-3140-001	KIT CPN		357-0527-100
ICC-850A J1-J6	1	371-0322-050	DDU-50S-F0	371-0187-00/+0040-040	371-0346-040/060
ICC-850A J7,J8		371-0322-020	DAU-15S-F0	371-0187-00/+0040-040	371-0346-040/060
MSP-850A	2	371-0322-030	DBU-25S-F0	371-0187-00/+0040-040	371-0346-040/060
RAC-870	1	371-0322-050	DDU-50S-F0	371-0389-290	371-0346-040/060
RTU-870	2	359-0681-010	JT06RE-20-25(086)		359-0080-030
SDD-640 J1,J2	1	634-4192-014	KIT CPN		372-2514-110/100
SDU-640A	2	371-0322-020	DAU-15S-F0	371-0187-00/+0040-010	371-0346-040/060
SVO-85A	1	359-0301-230	MS3126F14-19S		359-0032-020
SVO-85B -002	1	359-0301-240	MS3126F14-19SW		359-0032-020
SVO-85C -004 (ELV)	1		MS3126F14-19SX		359-0032-020
TDR-90	2	634-1021-001	KIT CPN		372-2514-110/100
TDR-90 J1		357-7204-010	TNC		
VHF-422A	2	634-1022-001	KIT CPN		372-2514-110/100
VHF-422A J1					COAX 372-2519-040
VIR-432	2	634-1022-001	KIT CPN		372-2514-110/100
VIR-432 J1-J3					COAX 372-2519-040
RTA-854	1	371-0322-040	DCC-37S-F0	371-1520-270/320	371-0346-040/060

Addendum 2
27 Sep 1989
523-0774079-011118

Interconnect Wiring Diagram
Figure 4-13 (Sheet 2 of 15)

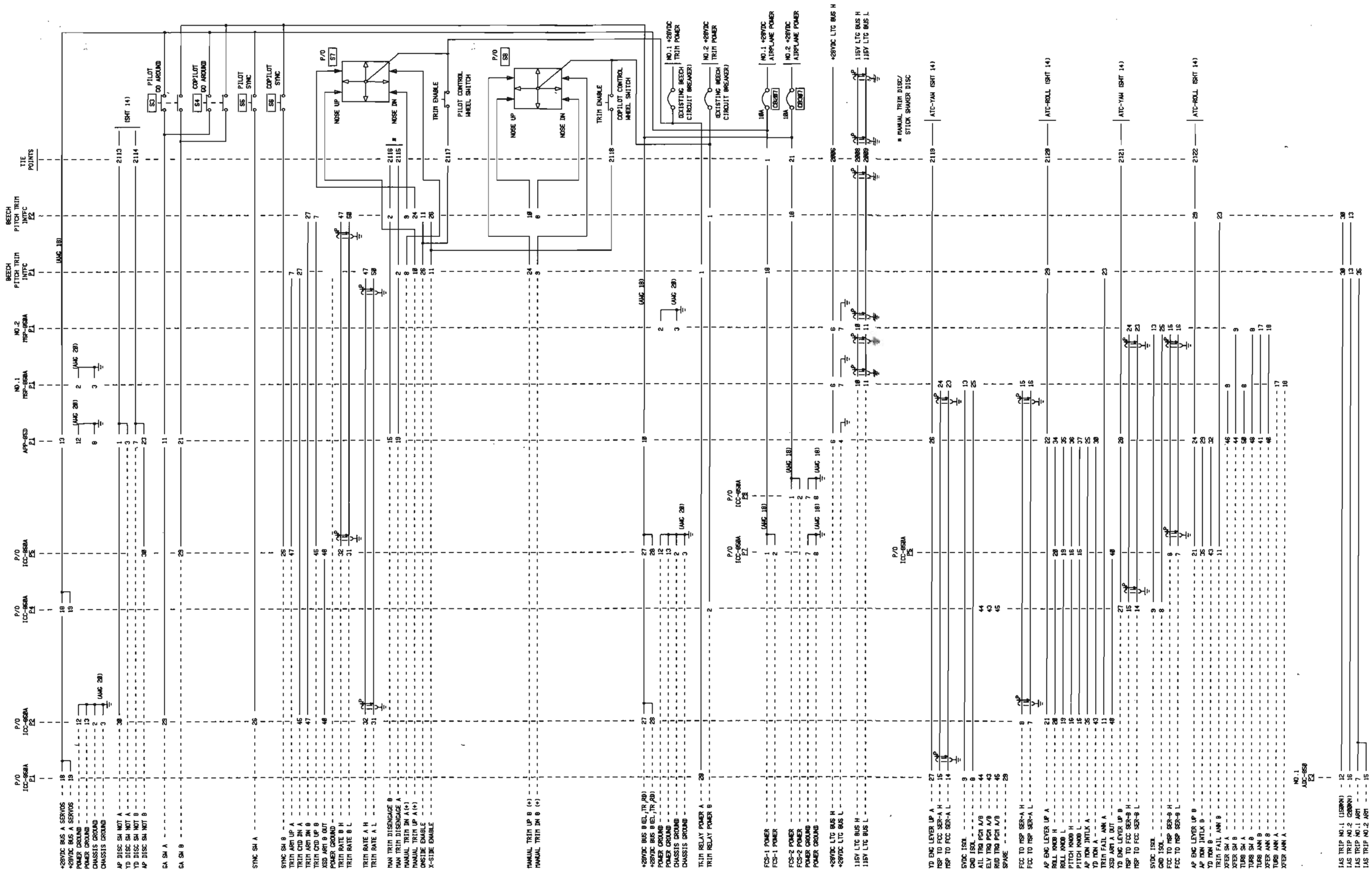

Addendum 2
27 Sep 1989
523-0774079-011118

Interconnect Wiring Diagram
Figure 4-13 (Sheet 3 of 15)

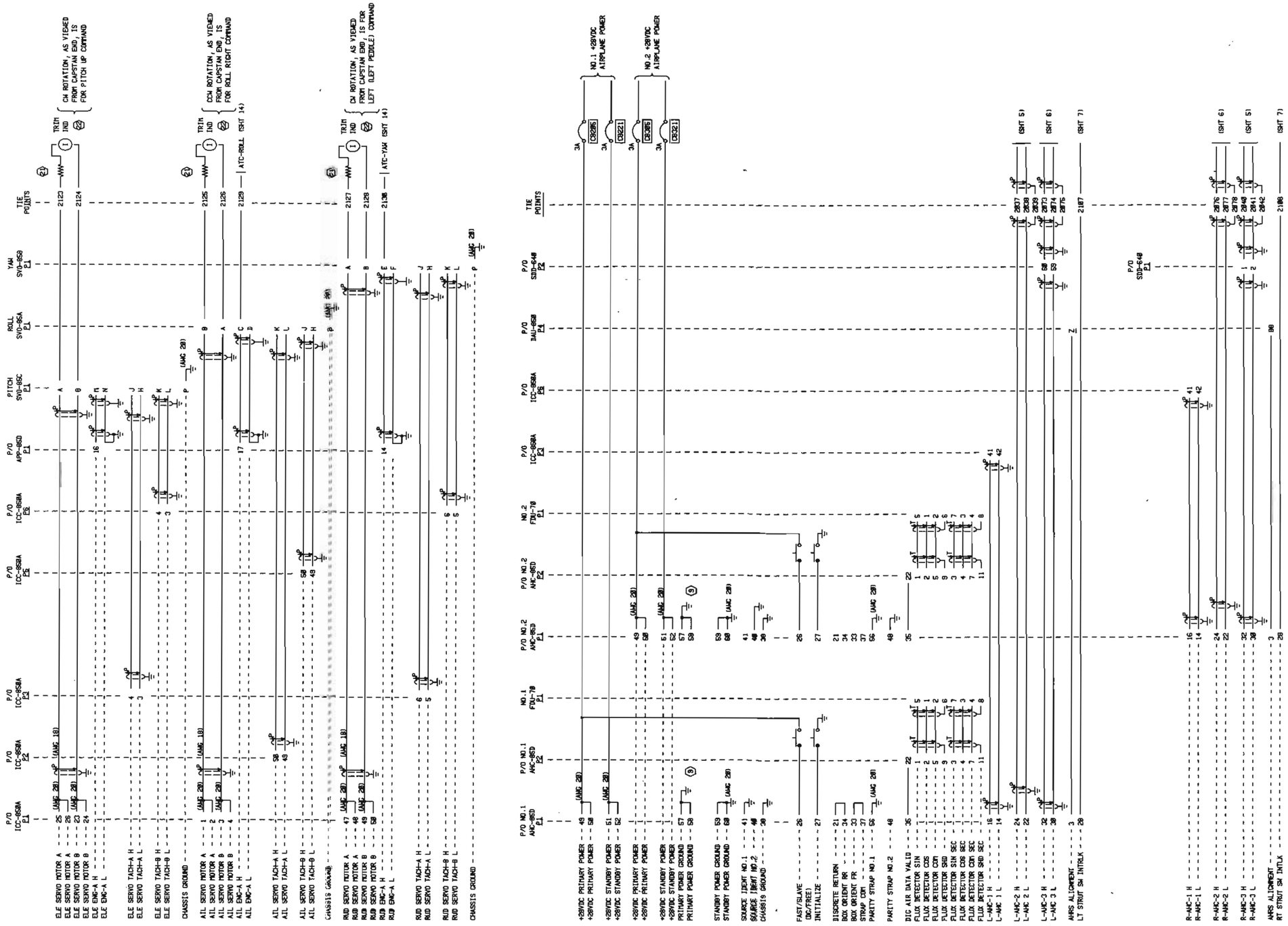

Interconnect Wiring Diagram
Figure 4-13 (Sheet 4 of 15)

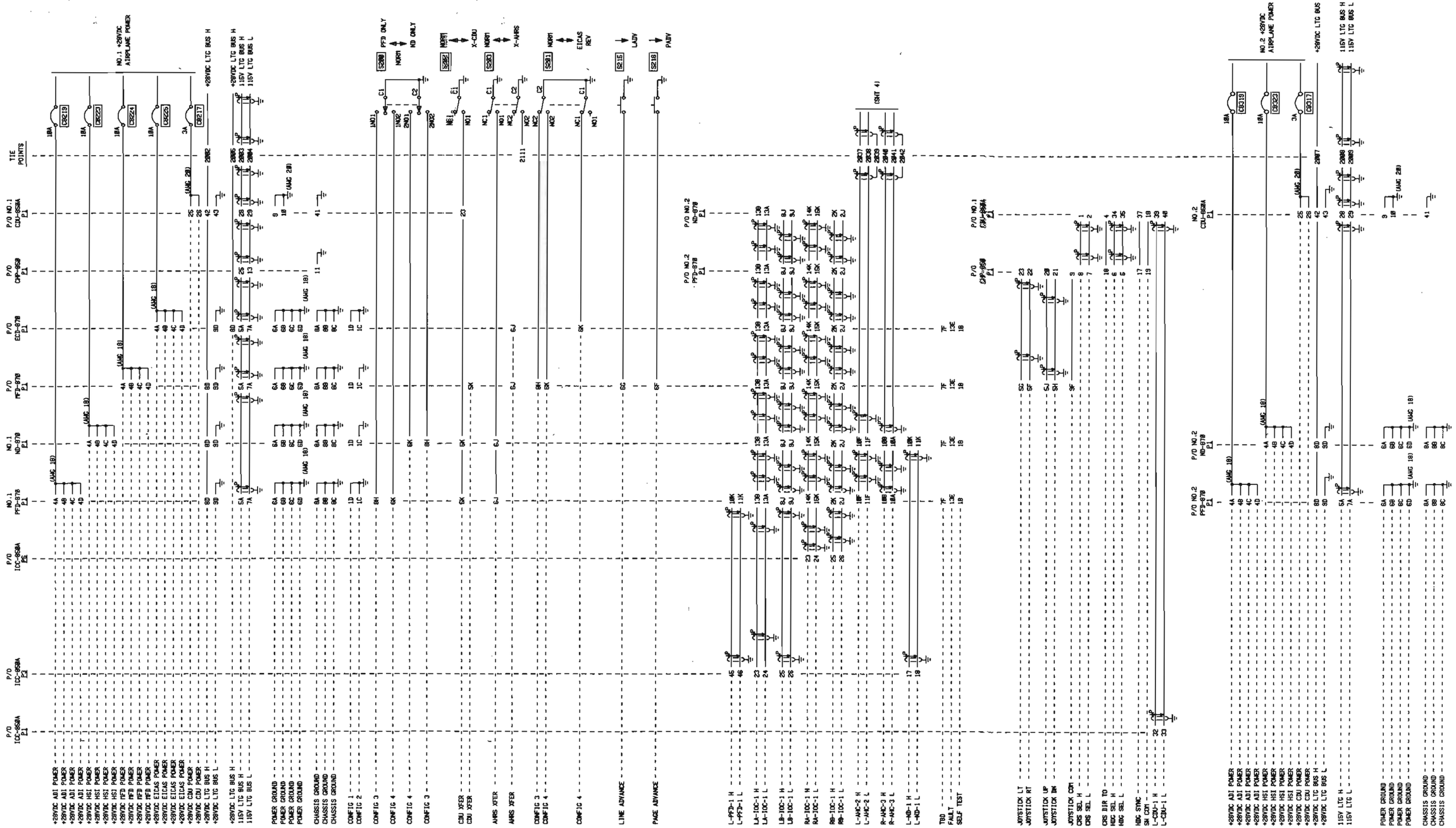

Interconnect Wiring Diagram
Figure 4-13 (Sheet 5 of 15)

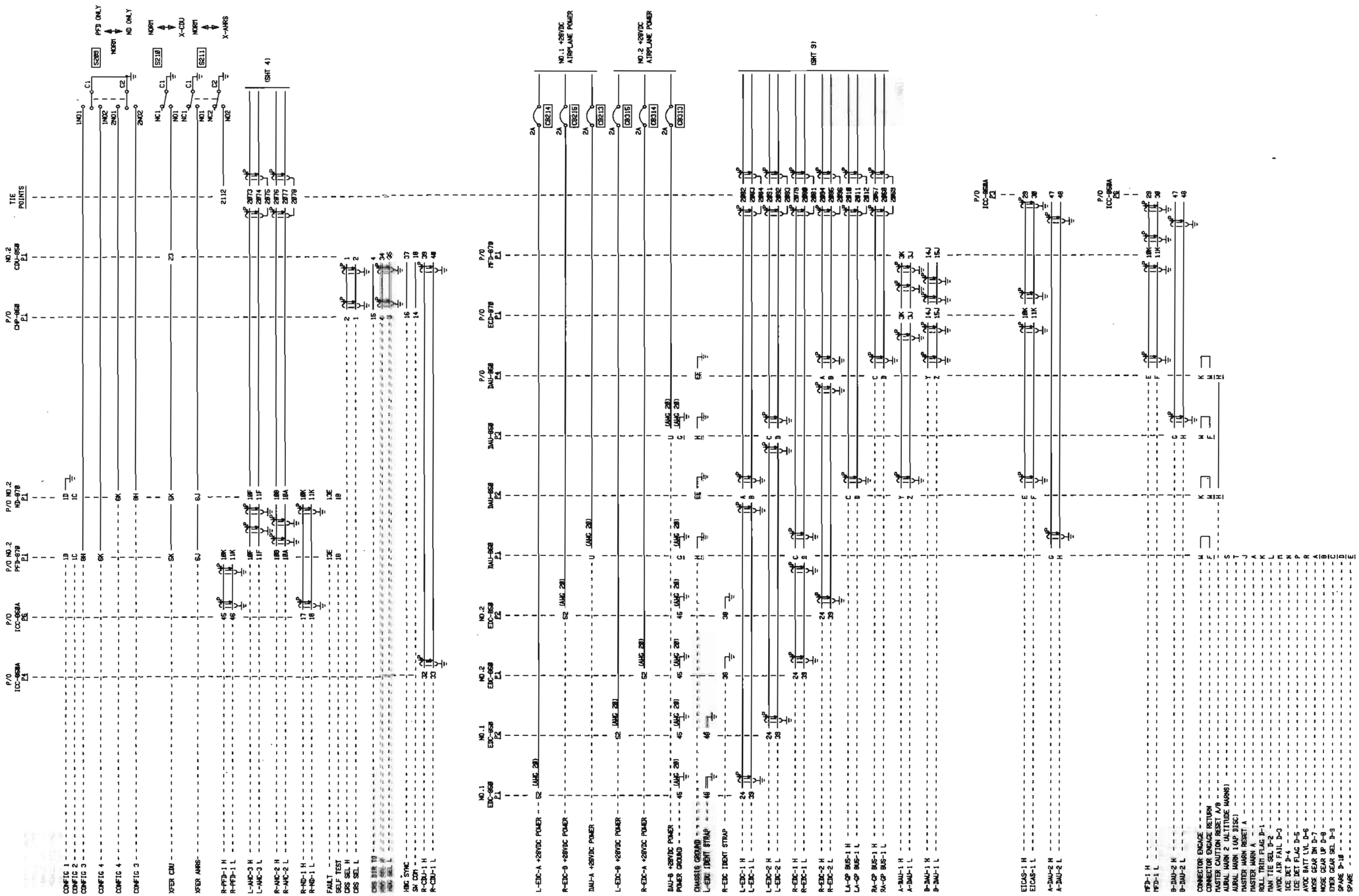

Interconnect Wiring Diagram
Figure 4-13 (Sheet 6 of 15)

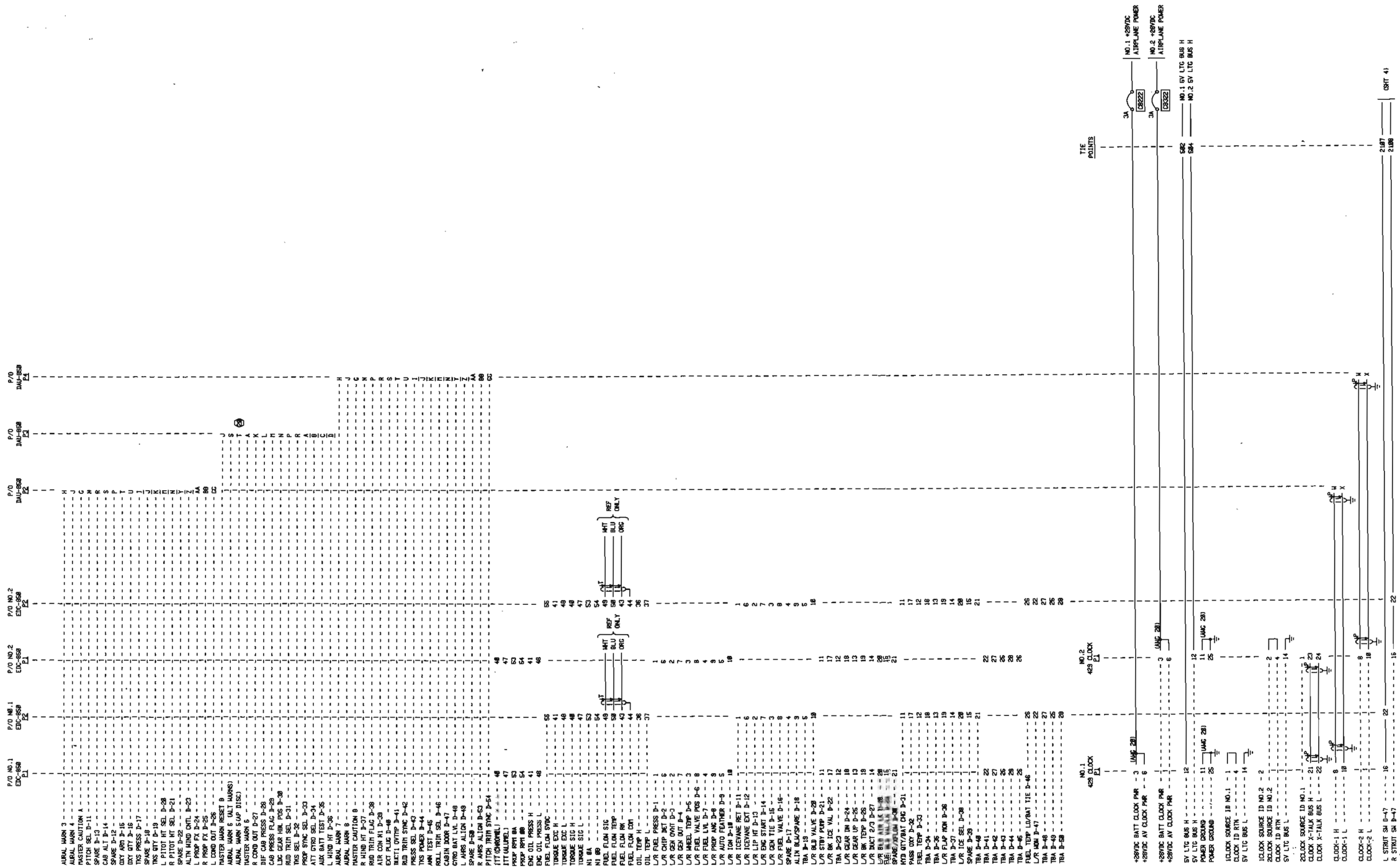

Interconnect Wiring Diagram
Figure 4-13 (Sheet 7 of 15)

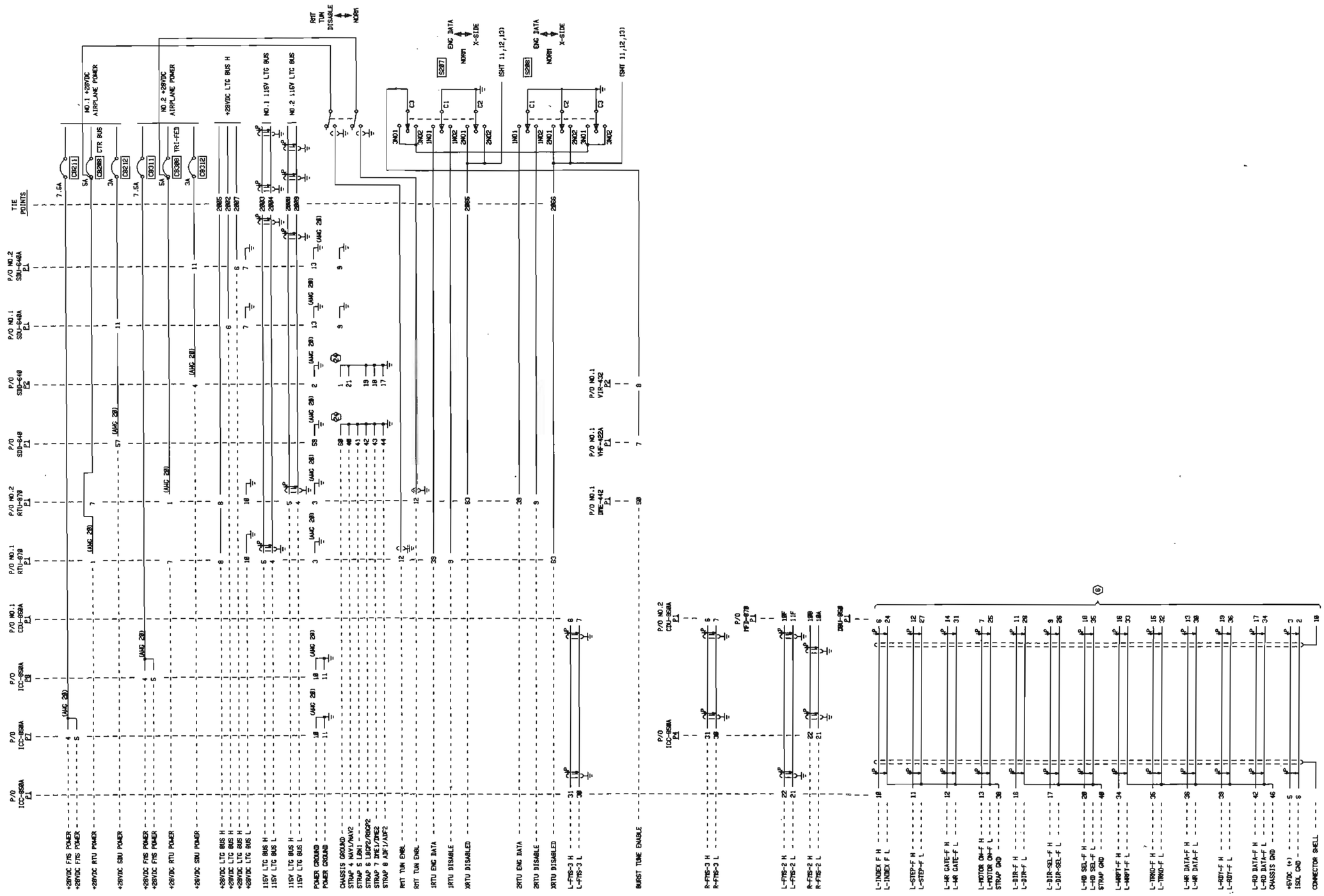

Interconnect Wiring Diagram
Figure 4-13 (Sheet 8 of 15)

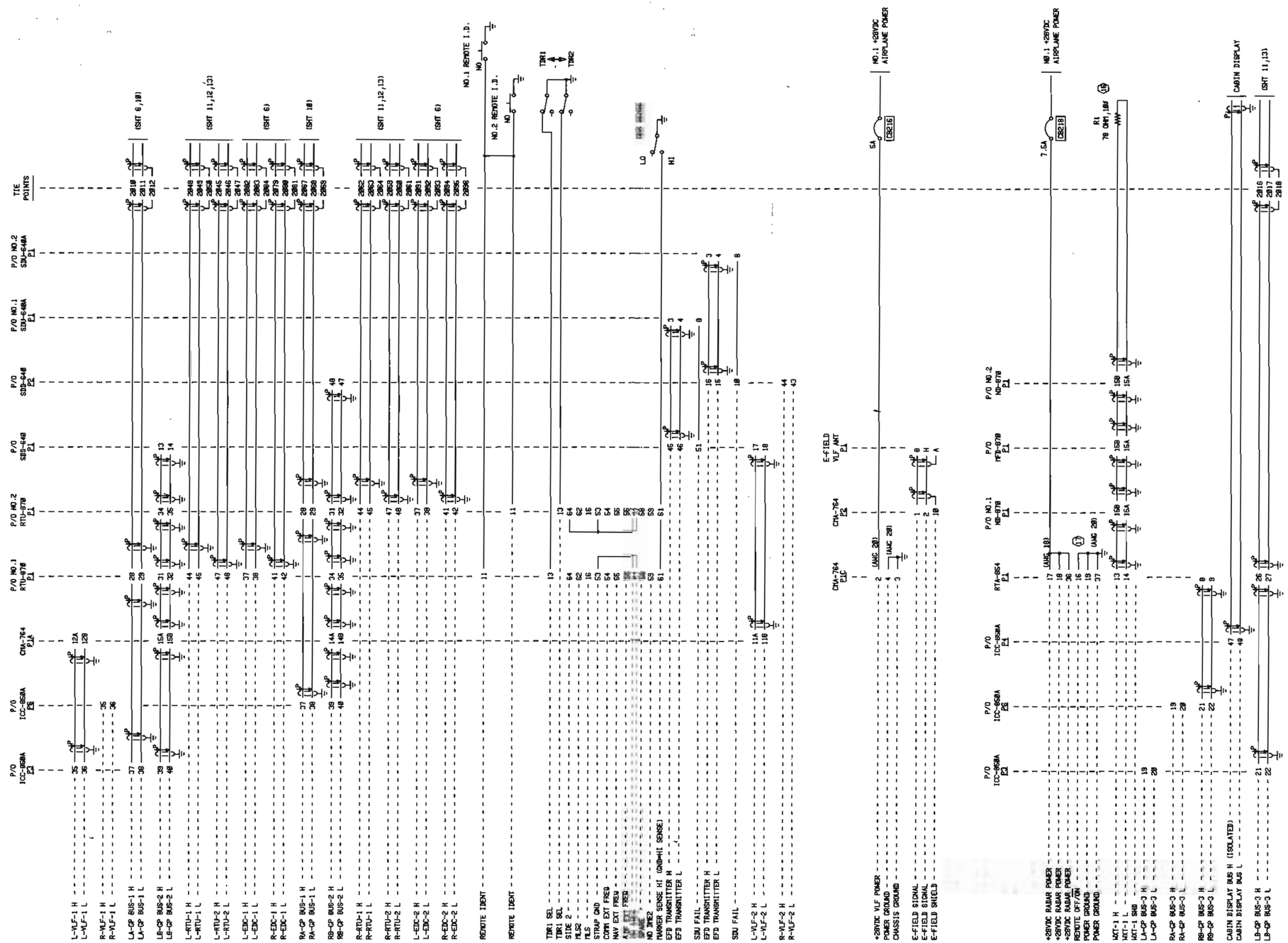

Interconnect Wiring Diagram
Figure 4-13 (Sheet 9 of 15)

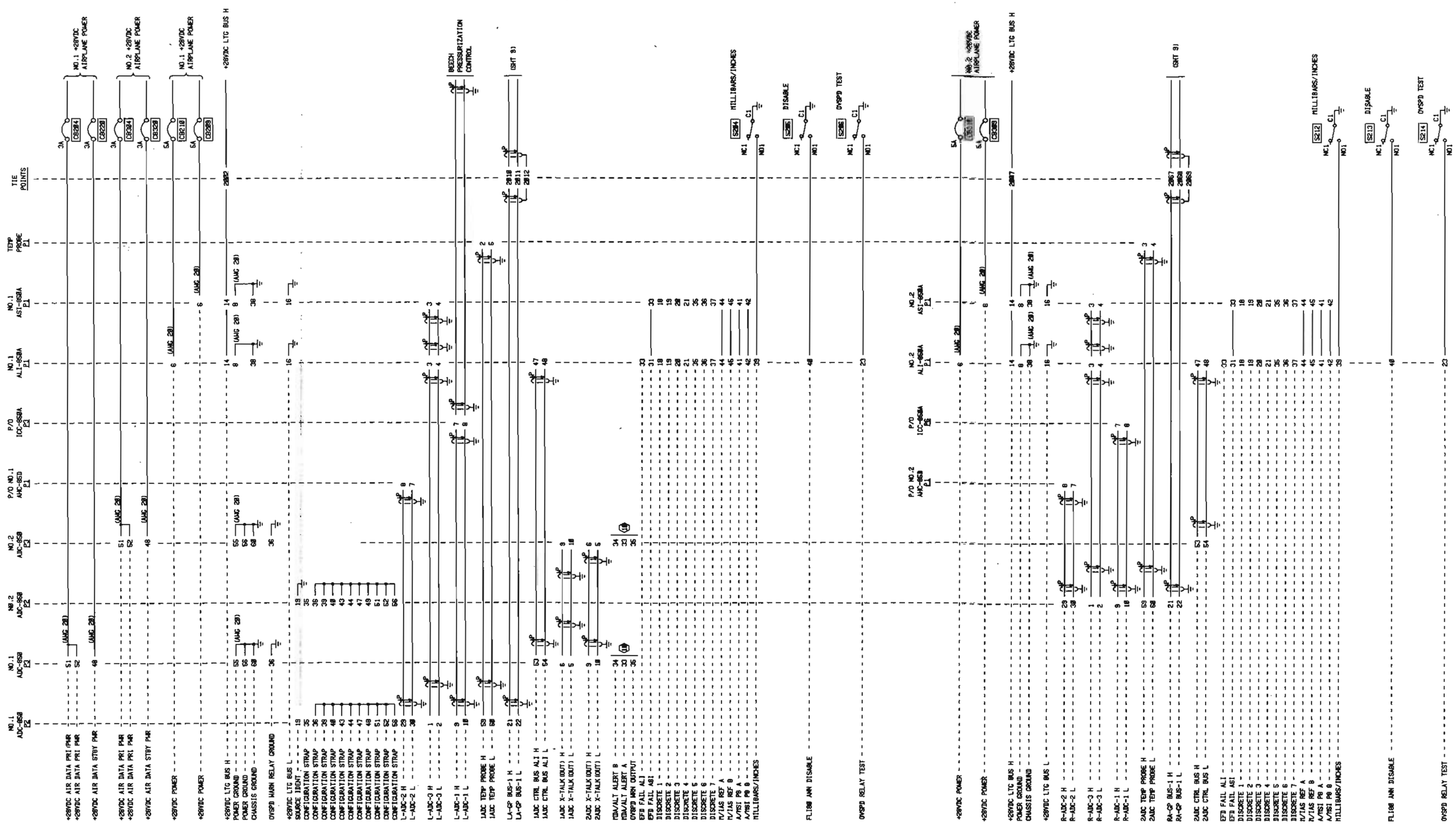

Interconnect Wiring Diagram
Figure 4-13 (Sheet 10 of 15)

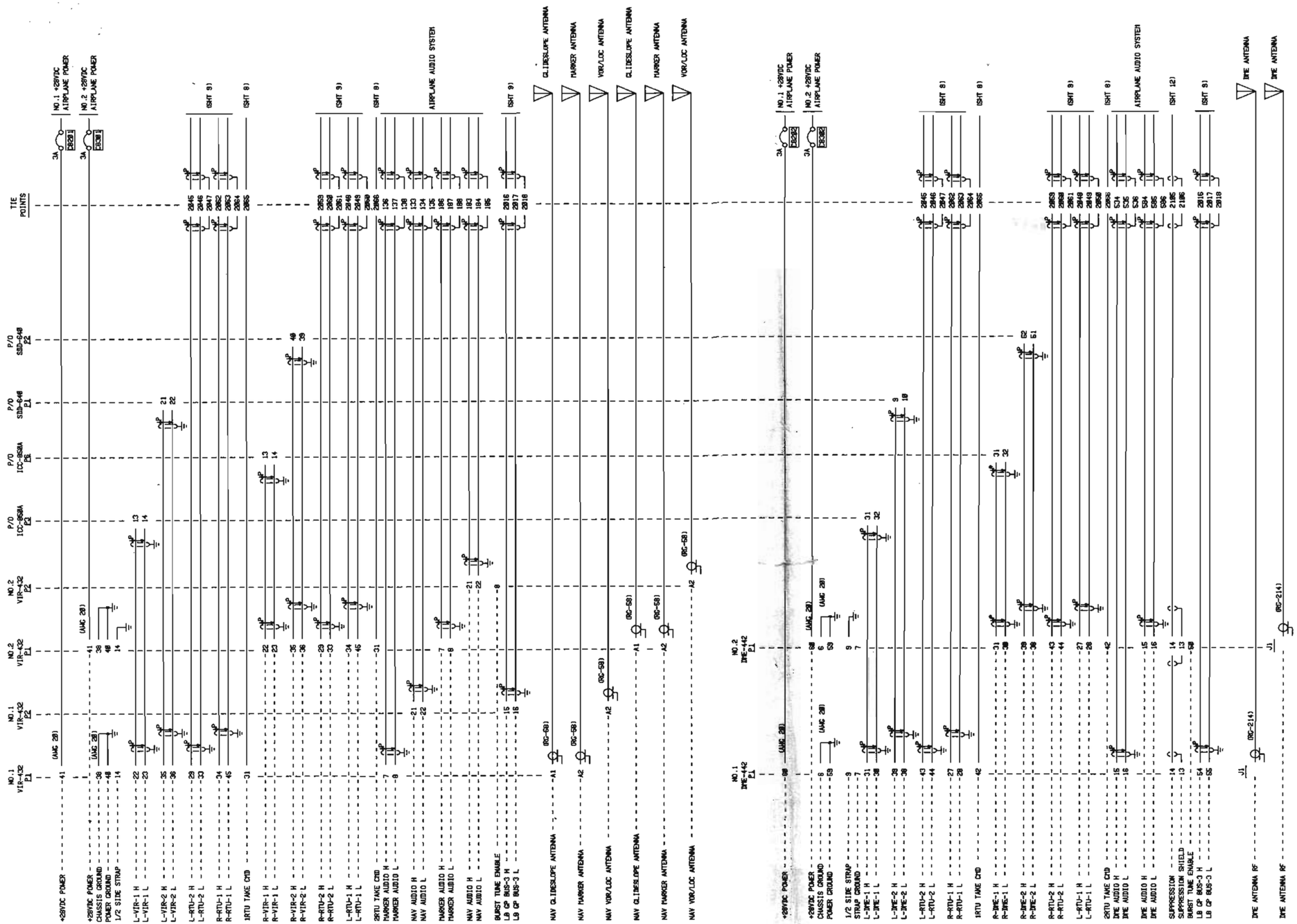

Interconnect Wiring Diagram
Figure 4-13 (Sheet 11 of 15)

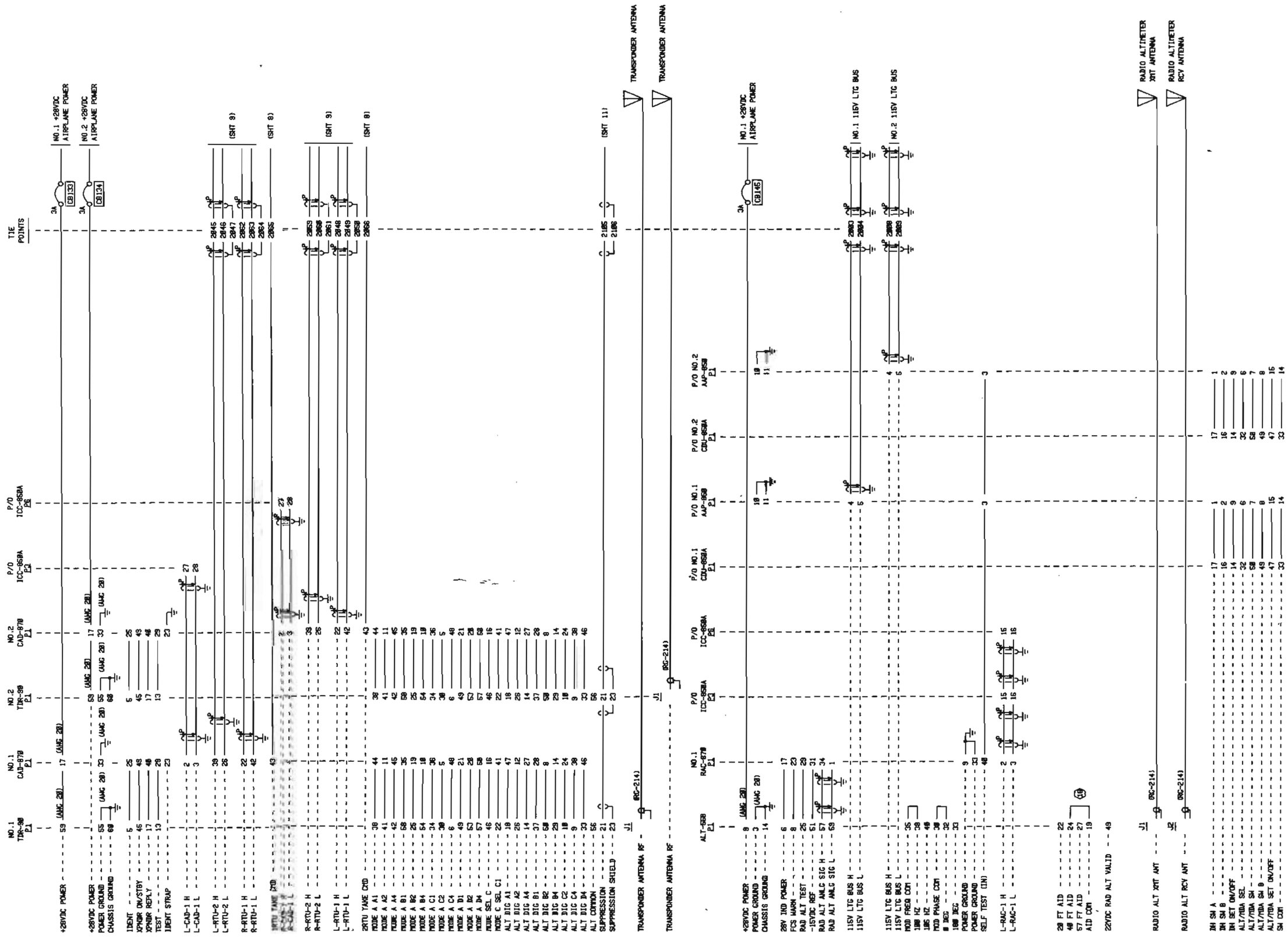

Interconnect Wiring Diagram
Figure 4-13 (Sheet 12 of 15)

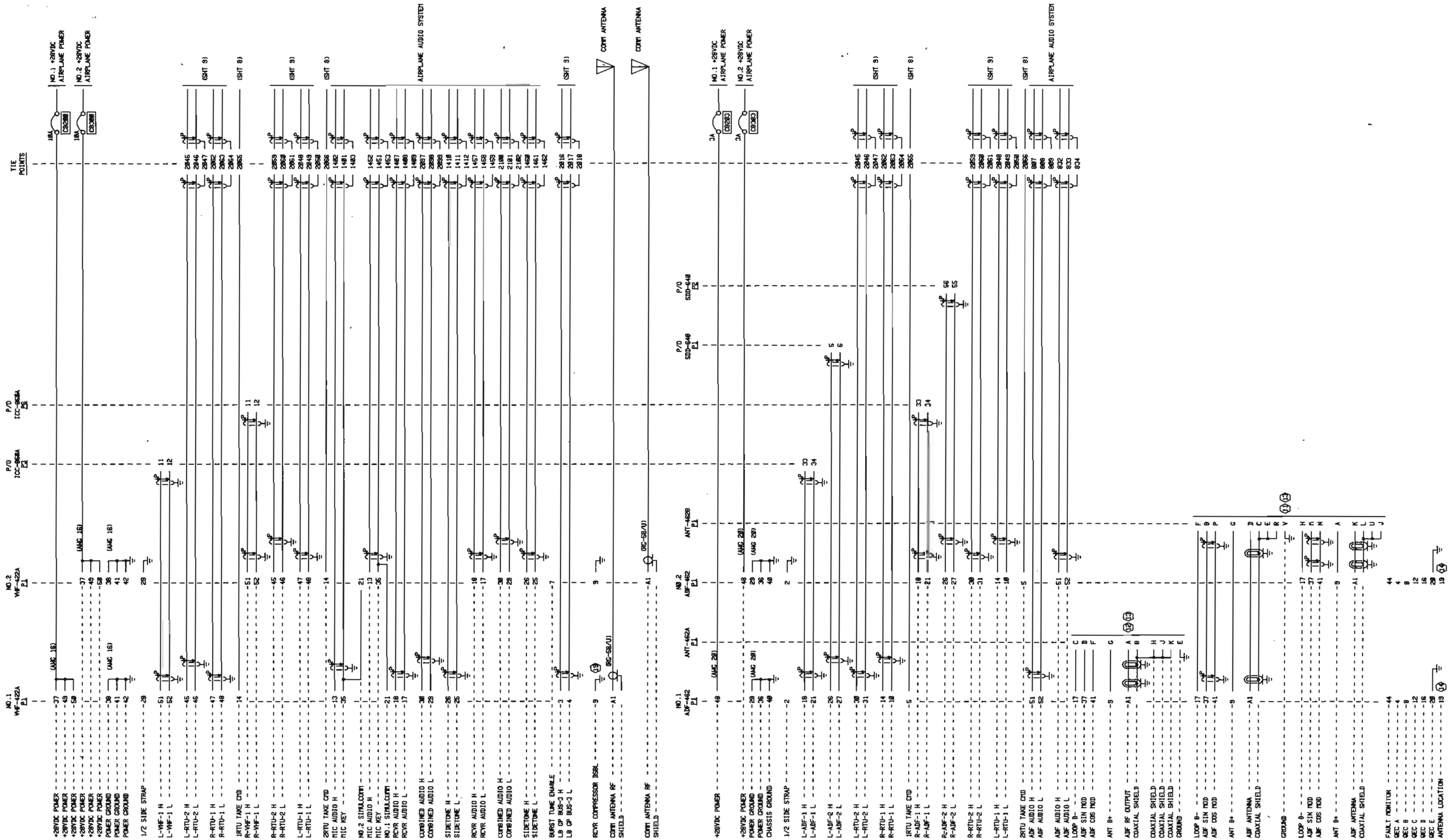

Interconnect Wiring Diagram
Figure 4-13 (Sheet 13 of 15)

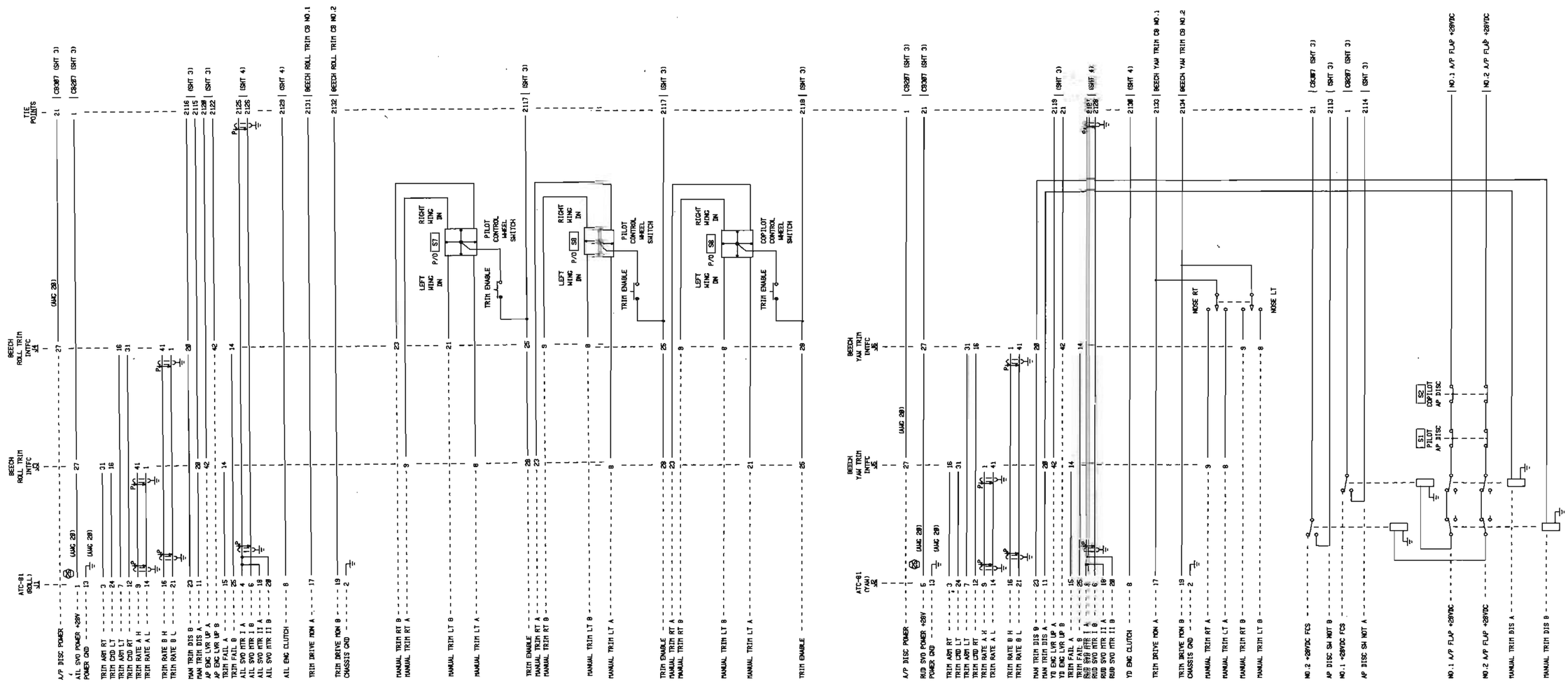

Interconnect Wiring Diagram
Figure 4-13 (Sheet 14 of 15)

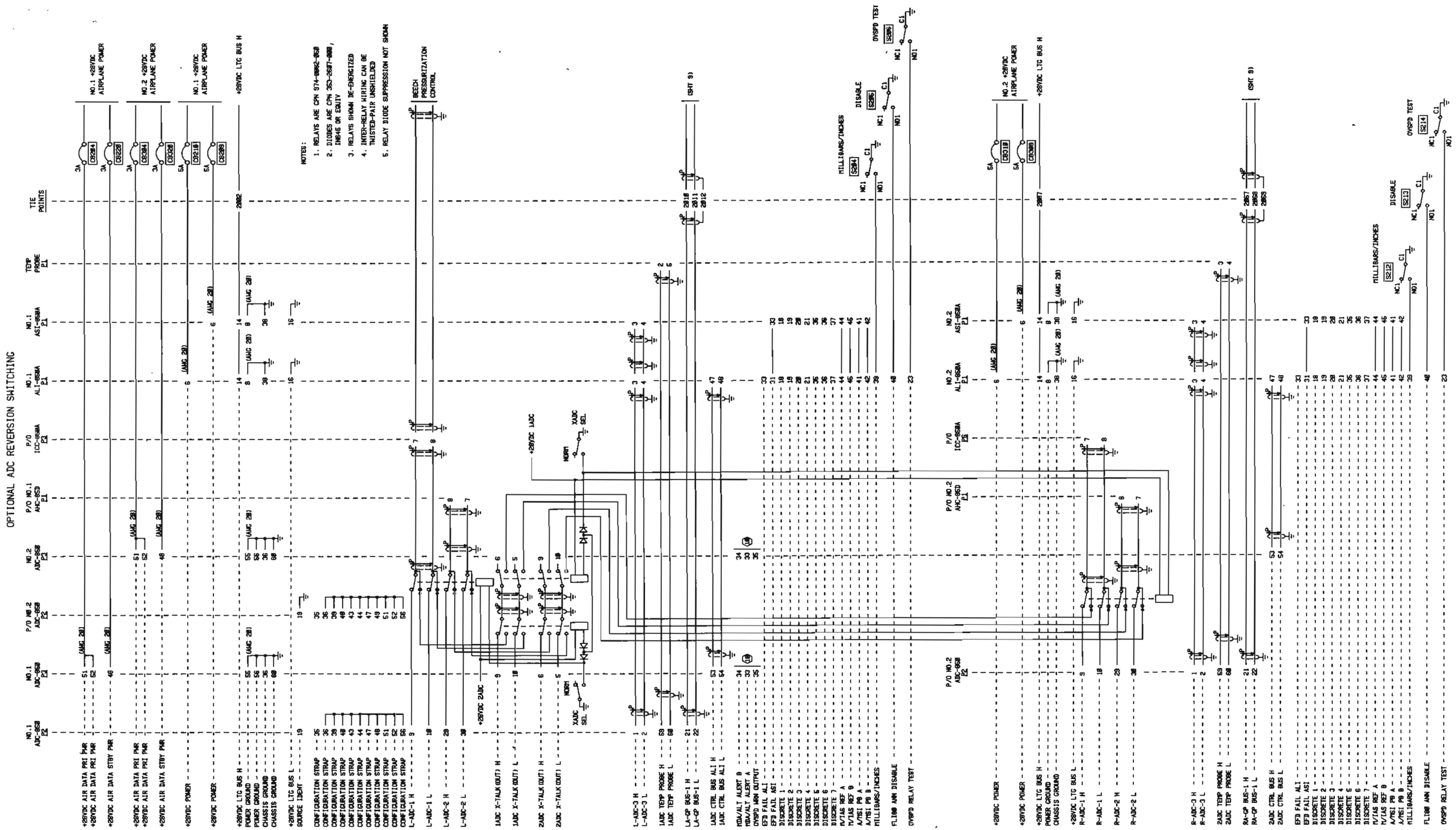

Interconnect Wiring Diagram
Figure 4-13 (Sheet 15 of 15)

Starship 1
Avionics System

Rockwell International

maintenance

Collins General Aviation Division

Printed in USA

•523-0774080-001118
1st Edition, 14 January 1989

table of contents

Paragraph	Page
5.1 Introduction	5-1
5.2 Periodic Inspection and Maintenance	5-1
5.2.1 RTA-854 Receiver Transmitter Antenna	5-1
5.2.2 SVO-85( ) Servo/SMT-85( ) Servo Mount	5-1
5.2.3 ADC-850 Air Data Computer	5-1
5.2.4 VIR-432 VHF Navigation Receiver	5-2
5.2.5 TDR-90 Transponder	5-2
5.3 Data Base Update Procedure	5-2
5.4 Recommended Troubleshooting Equipment	5-2
5.5 Mating Connector Hardware and Tooling	5-4
5.6 Diagnostic Description	5-10
5.6.1 Avionics Status	5-16
5.6.2 LRU Diagnostic Data	5-36
5.6.3 LRU Fault History	5-62
5.6.4 Engine Exceedance Data	5-64
5.6.5 FCS Diagnostics (Rev W)	5-67
5.6.5.1 Report Mode	5-68
5.6.5.2 Input Mode	5-80
5.6.5.3 Output Mode	5-88
5.7 Avionics LRU Fault Isolation Procedure	5-92
5.7.1 Level 1 Troubleshooting	5-92
5.7.2 Level 2 Troubleshooting	5-94

List of Effective Pages

*The asterisk indicates pages changed, added, or deleted by the current change.

Page No	Issue
Title	14 Jan 89
List of Effective Pages	14 Jan 89
5-1 thru 5-65	14 Jan 89
5-66 Blank	14 Jan 89
5-67 thru 5-163	14 Jan 89
5-164 Blank	14 Jan 89

Record of Revisions

RETAIN THIS RECORD IN THE FRONT OF MANUAL.
ON RECEIPT OF REVISIONS, INSERT REVISED PAGES IN THE MANUAL, AND ENTER DATE INSERTED AND INITIALS.

REV NO	REVISION DATE	INSERTION DATE/BY	SB NUMBER INCLUDED	REV NO	REVISION DATE	INSERTION DATE/BY	SB NUMBER INCLUDED
1st Ed	14 Jan 89		None				

section V
maintenance

5.1 INTRODUCTION

This section provides flight-line maintenance instructions for the Starship 1 Avionics System. The avionics system contains built-in diagnostics which monitor system operation and are used to isolate a failed LRU. These diagnostics operate on normal aircraft power, and provide both dynamic and recorded fault history displays. Refer to paragraph 5.7.1 for instructions on how to use the diagnostics to test the avionics system. If detailed troubleshooting is required, refer to paragraph 5.7.2; these procedures may also be used as a customer acceptance test.

This section also provides instructions to load monthly navaid data base updates from diskette into the FMS system memory. This procedure uses the DBU-850 Data Base Unit and the CDU-850A Control Display Unit.

5.2 PERIODIC INSPECTION AND MAINTENANCE

The following paragraphs list units which require periodic inspection or maintenance. Other units should be removed from the aircraft only when repair is required or during troubleshooting effort.

Caution

Turn power off before disconnecting any equipment from wiring. Disconnecting equipment without turning power off may cause voltage transients that can damage equipment.

5.2.1 RTA-854 Receiver Transmitter Antenna

As part of each maintenance operation, or at least once each year, clean and lubricate the mechanical portion (scan/tilt gears and sectors) of the RTA. In most cases, adequate cleaning is possible using a small soft-bristled brush and lubricant-based cleaning solution (such as Freon) without disassembling the unit.

After dirt and dried lubricant have been removed, apply a small amount of grease (CPN 005-0810-000) to the gear and sector teeth. Use a toothpick or small screwdriver to apply a drop of oil (CPN 005-0392-000) to the bearings. Wipe excess grease or oil from the surrounding areas with a lintless cloth.

Operate the unit and verify that all mechanically mating parts are adequately lubricated at the friction points. Note that the scan and tilt motor drive bearings are lifetime lubricated at the factory.

5.2.2 SVO-85( ) Servo/SMT-85( ) Servo Mount

An on-aircraft inspection of each SVO servo and SMT servo mount is required concurrent with each aircraft major overhaul, rigging maintenance, or the Beech recommended control system inspection period. Also, every 10 000 flight hours each servo mount should be removed from the aircraft and completely tested by a Collins General Aviation Division authorized service agency.

If a servo or servo mount does not pass the on-aircraft inspection or test, replace that unit. Return replaced units to a Collins General Aviation Division authorized service agency for repair.

Visually inspect each servo and servo mount for capstan/cable wear or contamination, cable spool-off angle, and a secure bond to the airframe.

With the autopilot disengaged, operate the control system through its entire range and inspect each servo mount for any unusual noise, binding, backlash, or other mechanical irregularities. Verify proper cable tension according to the aircraft TC or STC.

5.2.3 ADC-850 Air Data Computer

Every 2 years, an ADC-850 must be recertified for accuracy according to FAR part 91.171. Units can be recertified according to ADC-86/ADC-850 Service Information Letter 1-89, or can be sent to a Collins General Aviation Division authorized service agency for recertification/repair.

5.2.4 VIR-432 VHF Navigation Receiver

Perform a VOR equipment check for IFR operations every 30 days according to FAR part 91.25. This operational check measures indicated bearing error.

5.2.5 TDR-90 Transponder

Perform an ATC transponder test and inspection every 2 years according to FAR part 91.172. This procedure checks for data correspondence error.

5.3 DATA BASE UPDATE PROCEDURE

The FMS data base memory stores world-wide VHF navaid and airport reference point information. Two data bases are available: the FLT-DATA.NA (areas in North America) and the FLT-DATA.NAN (areas not in North America). Each data base also contains named enroute waypoints, on-airway NDB's, airport runways, and terminal waypoints for the applicable geographic area. One data base may be loaded into the FMS memory.

The data base expires periodically and is routinely updated with the latest information on a 28-day cycle. When the data base has expired, a warning is displayed on the MFD during FMS initialization.

A diskette containing the latest data base information is distributed by Collins General Aviation Division every 28 days. Upload the data base from this diskette into the FMS system memory as soon as it arrives. Perform the update while the aircraft is on the ground.

Update the system data base using the DBU and CDU as follows:

a. Press the IDX line key on either CDU to display the FMS INDEX page.
b. Press the READ/WRITE DISKETTE line key.
c. Insert the diskette into the DBU (located in the upper section of the IAPS cabinet).
d. Press the READ FILE FROM DISKETTE line key. The CDU then displays the diskette directory (normally a single-file name).
e. Press the FLT-DATA.NA (or FLT-DATA.NAN) line key to load the data base file into FMS memory.

Note

It will take several minutes to read this file. Wait until the CDU displays the READ/WRITE TO DISKETTE page; this indicates that the update is complete.

f. Press the INDEX line key to display the FMS INDEX page.

5.4 RECOMMENDED TROUBLESHOOTING EQUIPMENT

Table 5-1 lists equipment recommended for flightline troubleshooting. Equivalent equipment may be substituted.

Table 5-1. Troubleshooting Equipment.

EQUIPMENT	DESCRIPTION
Breakout box and cables	Used to break out the ALI, ASI, APP, CAD, RAC, CDU, and ICC. This assembly may be fabricated according to figure 5-1 or ordered from JcAIR Instrumentation (pn 01-0314-00). JcAIR Instrumentation One Industrial Parkway Industrial Airport, KS 66031 Phone: (913) 782-5699
Bus reader	ARINC 429 bus reader, such as JcAIR Model "429".
Multimeter	Used for voltage, current, and continuity checks.
Oscilloscope	Used to verify bus levels and activity.
EDC simulator	Simulates engine inputs to an EDC; used to determine if an engine problem or an avionics problem exists. This unit is not available at time of publication.

ADDENDUM 2

TO

STARSHIP 1 AVIONICS SYSTEM

SYSTEM MANUAL

PART NUMBER 523-0774076, DATED 14 JAN 1989

Insert this addendum sheet facing page 5-2 of the Maintenance Section of the manual

Add the following to the Periodic Inspection and Maintenance paragraphs.

5.2.6 Routine Crt Cleaning

The Starship 1 Avionics System contains several panel-mounted units which have glass (crt) displays. These displays should be routinely cleaned using these materials:

Windex or warm water with a mild soap
Watchmaker Tissue (Stock #11A) or a soft low-lint cloth

Apply Windex to the cloth or tissue, not directly to the crt display. This helps prevent excess liquid from running under the bezel.

Always use a very soft cloth (or tissue) for cleaning. A hard cloth could damage the surface coating.

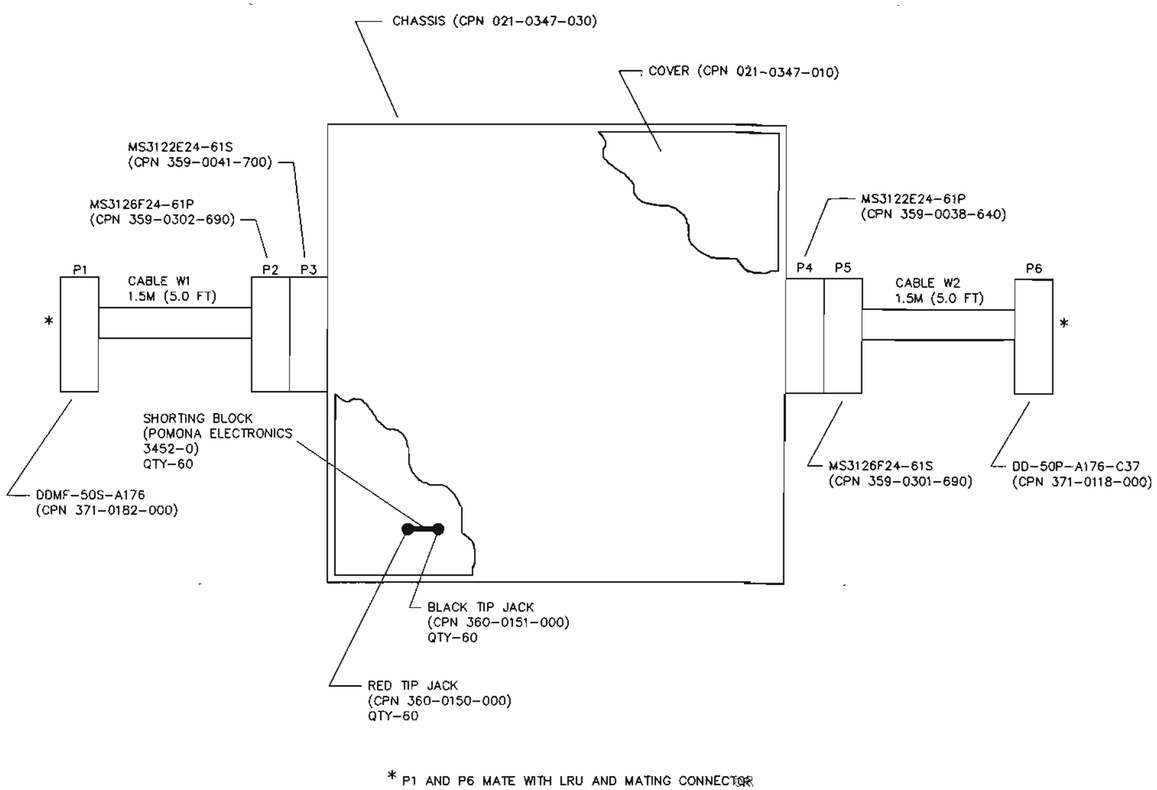

NOTE:

1. THIS BREAKOUT BOX IS DESIGNED SO THAT A VARIETY OF CABLES MAY BE FABRICATED AND USED WITH THE CHASSIS ASSEMBLY. THIS FIGURE SHOWS CABLES WHICH EXTEND UNITS WITH CANNON D-SUB MINIATURE 50 PIN CONNECTORS. OTHER CABLES MAY BE FABRICATED AS REQUIRED TO EXTEND UNITS WITH DIFFERENT TYPES OF CONNECTORS. REFER TO TABLE 5-2 AND FIGURE 4-12 FOR CONNECTOR INFORMATION.

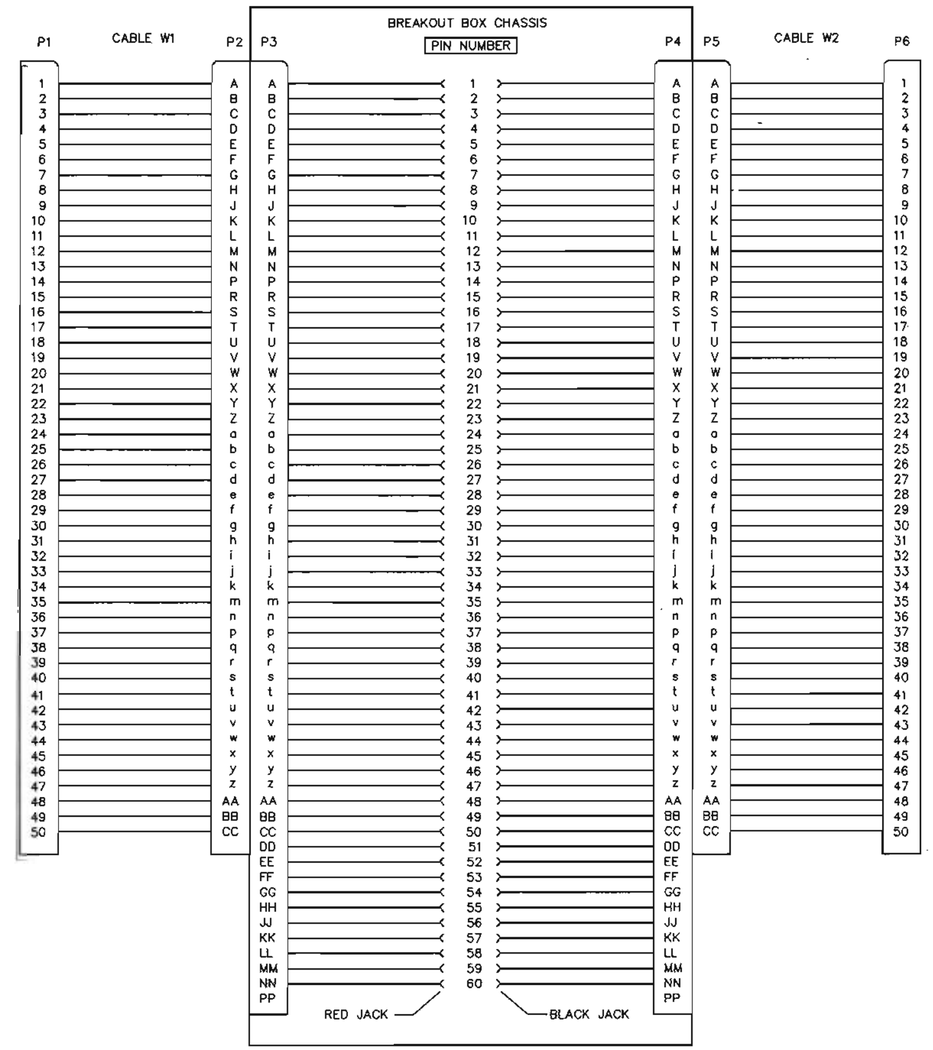

CGO-0310-01-AC-0

Breakout Box,
Parts List and Schematic Diagram
Figure 5-1

5.5 MATING CONNECTOR HARDWARE AND TOOLING

Table 5-2 lists the mating connector hardware and associated tools for each LRU in the avionics system.

Table 5-2. Mating Connector Hardware and Tooling.

UNIT	HARDWARE/TOOLING
AAP-850	Mating connector: Cannon DAU-15S-FO, CPN 371-0922-020 Contacts: Cannon 030-1953-010, CPN 371-0946-040 Key kit: Collins 629-8381-001 Hood and latch: Positronics D15000JVLO-464.2, CPN 371-0399-250 **Tooling:
ADC-850	Mating connector kit: Collins 634-1021-001 (qty 3) Connector: 60-pin Thinline II, Collins 634-1112-001 Contacts: Collins 372-2514-110 (insulation up to 1.27 mm (0.050 in) diameter) Contacts: Collins 372-2514-180 (insulation from 1.27 mm (0.050 in) to 2.03 mm (0.080 in) diameter) *Tooling:
ADF-462	Mating connector kit: Collins 634-4192-009 Connector: 52-pin Thinline II, Collins 653-1286-001 Contacts: Collins 372-2514-110 (insulation up to 1.27 mm (0.050 in) diameter) Contacts: Collins 372-2514-180 (insulation from 1.27 mm (0.050 in) to 2.03 mm (0.080 in) diameter) Coax insert: Collins 372-2519-040 *Tooling:
ADM-850	NA
AHC-85D	Mating connector kit: Collins 634-3024-002 (qty 2) Connector: 60-pin Thinline II, Collins 634-1112-001 Contacts: Collins 372-2514-110 (insulation up to 1.27 mm (0.050 in) diameter) Contacts: Collins 372-2514-180 (insulation from 1.27 mm (0.050 in) to 2.03 mm (0.080 in) diameter) *Tooling:
ALI-850A, ASI-850A, CDU-850A	Mating connector: Cannon DDU-50S-FO, CPN 371-0922-050 Contacts: Cannon 030-1953-010, CPN 371-0946-040 Key kit: Collins 629-8381-001 Hood: Cannon DD24661, CPN 371-0148-000 Screw locks: Cannon D20420-12, CPN 371-0040-040 **Tooling:
ALT-55B	Mating connector kit: Collins 634-4192-010 Connector: 60-pin Thinline II, Collins 634-1112-001 Contacts: Collins 372-2514-110 (insulation up to 1.27 mm (0.050 in) diameter) Contacts: Collins 372-2514-180 (insulation from 1.27 mm (0.050 in) to 2.03 mm (0.080 in) diameter) TNC connectors (qty 2): Automatic 80-01004-00, CPN 357-7204-010 (straight); or Automatic 301-T2100N, CPN 357-7351-010 (90°) *Tooling:
ANT-462A	Mating connector: MIL MS3126F12-10S, CPN 359-0301-050 Contacts: MIL MS3193A20-20A, CPN 359-0032-020 Insertion tool: MIL MS24256A20, CPN 359-4078-010 Extraction tool: MIL MS24256R20, CPN 359-4078-020 Crimp tool: MIL M22520/2-01, CPN 359-8102-010 Crimp tool positioner: MIL M22520/2-02, CPN 359-8102-020
ANT-462B	Mating connector: MIL MS3126F14-19S, CPN 359-0301-230 Contacts: MIL MS3193A20-20A, CPN 359-0032-020 Insertion tool: MIL MS24256A20, CPN 359-4078-010 Extraction tool: MIL MS24256R20, CPN 359-4078-020 Crimp tool: MIL M22520/2-01, CPN 359-8102-010 Crimp tool positioner: MIL M22520/2-02, CPN 359-8102-020

Table 5-2. Mating Connector Hardware and Tooling (Cont).

UNIT	HARDWARE/TOOLING
ANT-52	Mating connector (TNC): Automatic 80-01004-00, CPN 357-7204-010 (straight); or Automatic 301-T2100N, CPN 357-7351-010 (90°) Buttonhead cap screws: Collins 324-1671-550 Rf gasket: Collins 018-1394-100
APP-85D	Mating connector: Cannon DDU-50S-FO, CPN 371-0922-050 Contacts: Cannon 030-1953-010, CPN 371-0946-040 Key kit: Collins 629-8381-001 Screw locks: Cannon D20419-122, CPN 371-0040-030 Hood: Cannon DD20964, CPN 371-0187-000 **Tooling:
ASI-850A	Refer to ALI-850A.
ATC-81	Mating connector: Cannon DBU-25S-FO, CPN 371-0922-030 (qty 2) Contacts: Cannon 030-1953-010, CPN 371-0946-040 Key kit: Collins 629-8381-001 Hood and latch: Positronics MD25000JVLO-464.3, CPN 371-0399-260 **Tooling:
CAD-870, RAC-870	Mating connector kit: Collins 653-9014-001 Connector: Cannon DDU-50S-FO, CPN 371-0922-050 Contacts: Cannon 030-1953-010, CPN 371-0946-040 Key kit: Collins 629-8381-001 Hood and latch: Positronics D50000JVLO-464.5, CPN 371-0399-280 **Tooling:
CDC-850A	NA
CDU-850A	Refer to ALI-850A.
CHP-850	Mating connector: Cannon DBU-25S-FO, CPN 371-0922-030 Contacts: Cannon 030-1953-010, CPN 371-0946-040 Key kit: Collins 629-8381-001 Hood and latch: Positronics D25000JVLO-464.3, CPN 371-0399-260 **Tooling:
CMA-764	Mating connector kit: Collins 270-1306-040 Connector J1: ARINC 600 size 1, AMP 208597-2, CPN 370-0069-010 Contacts: AMP 208262-3, CPN 370-5452-070 (size 22) Insertion/extraction tool: Cannon CIET-22, CPN 371-8445-020 Crimp tool: MIL M22520/2-01, CPN 359-8102-010 Crimp tool positioner: Daniels DAN-K181, CPN 359-8025-040 Contacts: AMP 208270-2, CPN 370-5452-060 (size 16) Insertion/extraction tool: MIL MS3156-16, CPN 370-8053-030 Crimp tool: MIL M22520/1-01, CPN 359-8101-010 Crimp tool positioner: MIL M22520/1-02, CPN 359-8101-020 Contacts: AMP 208273-2, CPN 370-0066-090 (size 12) Insertion/extraction tool: Cannon CET 12-4, CPN not assigned Crimp tool: MIL M22520/1-01, CPN 359-8101-010 Crimp tool positioner: MIL M22520/1-11, CPN 359-8101-120 Mating connector J2: MIL MS27467T11F35P, CPN 359-0648-040 Contacts: Cannon 030-2042-000, CPN 359-0608-120 Insertion/extraction tool: MIL M81969/14-01, CPN 359-8032-010 Crimp tool: MIL M22520/2-01, CPN 359-8102-010 Crimp tool positioner: MIL M22520/2-09, CPN 359-8102-090

Table 5-2. Mating Connector Hardware and Tooling (Cont).

UNIT	HARDWARE/TOOLING
DAU-850	Mating connector J1: Bendix PTO6A-18-32S(SR), CPN 371-2476-000 Mating connector J2: Bendix PTO6A-22-55S(SR), CPN 371-6225-000 Mating connector J3: Bendix PTO6A-18-32SW(SR), CPN 371-2477-000 Mating connector J4: Bendix PTO6A-22-55SW(SR), CPN 371-6226-000 Contacts: Not removable
DBU-850	Mating connector: Cannon DCU-37S-FO, CPN 371-0922-040 Contacts: Cannon 030-1953-010, CPN 371-0946-040 Key kit: Collins 629-8381-001 Hood and latch: Positronics D37000JVL0-464.4, CPN 371-0399-270 **Tooling:
DME-442	Mating connector kit: Collins 634-4192-013 Connector: 60-pin Thinline II, Collins 634-1112-001 Contacts: Collins 372-2514-110 (insulation up to 1.27 mm (0.050 in) diameter) Contacts: Collins 372-2514-180 (insulation from 1.27 mm (0.050 in) to 2.03 mm (0.080 in) diameter) TNC connector: Automatic 80-01004-00, CPN 357-7204-010 (straight) or Automatic 301-T2100N, CPN 357-7351-010 (90°) *Tooling:
ECD-870, MFD-870, ND-870, PFD-870	Mating connector kit: Collins 659-7859-001 Connector: Cannon 370-0075-070, CPN 370-0075-070 Contacts: Cannon 030-2259-000, CPN 370-0066-060 Insertion/extraction tool: Cannon CIET-22, CPN 371-8445-020 Crimp tool: MIL M22520/2-01, CPN 359-8102-010 Crimp tool positioner: MIL M22520/2-23, CPN 359-8102-130
EDC-850	Mating connector J1: MIL D38999/26FE35SA, CPN 359-0680-170 Mating connector J2: MIL D38999/26FE35SB, CPN 359-0680-180 Contacts: MIL MS39029/56-348, CPN 359-0608-130 Insertion/extraction tool: MIL M81969/14-01, CPN 359-8032-010 Crimp tool: MIL M22520/2-01, CPN 359-8102-010 Crimp tool positioner: MIL M22520/2-07, CPN 359-8102-070
FCC-850	NA
FDU-70	Mating connector kit: Collins 634-3148-001 Connector: AMP 208964-1, CPN 372-0527-020 Contacts: AMP 206793-1, CPN 372-0527-100 Insertion/extraction tool: AMP 91067-1 (MIL MS18278-1), CPN 372-8104-010 Crimp tool: MIL M22520/2-01, CPN 359-8102-010 Crimp tool positioner: MIL M22520/2-08, CPN 359-8102-080
FMC-851A, FMC-852A	NA
ICC-850A	Mating connectors J1-J6: Cannon DDU-50S-FO, CPN 371-0922-050 (qty 6) Screw locks: Cannon D20420-98, CPN 371-0040-040 Hood: Cannon DD24661, CPN 371-0148-000 Mating connectors J7-J8: Cannon DAU-15S-FO, CPN 371-0922-020 (qty 2) Screw locks: Cannon D20419-16, CPN 371-0040-010 Hood: Cannon DA24658, CPN 371-0145-000 Contacts: Cannon 030-1953-010, CPN 371-0946-040 Key kit: Collins 629-8381-001 **Tooling:
ICU-85	NA

Table 5-2. Mating Connector Hardware and Tooling (Cont).

UNIT	HARDWARE/TOOLING
IOC-851	NA
MFD-870	Refer to ECD-870.
MSP-850A	Mating connector: Cannon DBU-25S-FO, CPN 371-0922-030 Contacts: Cannon 030-1953-010, CPN 371-0946-040 Key kit: Collins 629-8381-001 Screw locks: Cannon D20419-16, CPN 371-0040-010 Hood: Cannon DB19678-2, CPN 371-0036-000 **Tooling:
ND-870, PFD-870	Refer to ECD-870.
PWR-851A	NA
RAC-870	Refer to CAD-870.
RTA-854	Mating connector kit: Collins 687-9726-002 Connector: Cannon DCU-37S-FO, CPN 371-0922-040 Contacts: Cannon 030-1953-010, CPN 371-0946-040 Screw locks: Cannon D20419-16, CPN 371-0040-010 Hood: Cannon DC20963, CPN 371-0186-000 **Tooling:
RTU-870A	Mating connector: Bendix JTO6RE-20-2S(386), CPN 359-0601-010 Contacts: MIL M39029/57-354, CPN 359-0608-110 Insertion/extraction tool: MIL M81969/14-01, CPN 359-8032-010 Crimp tool: MIL M22520/2-01, CPN 359-8102-010 Crimp tool positioner: MIL M22520/2-06, CPN 359-8102-060
SDD-640	Mating connector kit: Collins 634-4192-014 Connectors: 60-pin Thinline II, Collins 634-1112-001 (qty 2) Contacts: Collins 372-2514-110 (insulation up to 1.27 mm (0.050 in) diameter) Contacts: Collins 372-2514-180 (insulation from 1.27 mm (0.050 in) to 2.03 mm (0.080 in) diameter) *Tooling:
SDU-640A	Mating connector: Cannon DAU-15S-FO, CPN 371-0922-020 Contacts: Cannon 030-1953-010, CPN 371-0946-040 Key kit: Collins 629-8381-001 Hood: Cannon DA24658, CPN 371-0145-000 Screw locks: Cannon D20419-16, CPN 371-0040-010 **Tooling:
SVO-85A	Aileron servo Mating connector: MIL MS3116F14-19S, CPN 371-6458-000 Contacts: Not removable
SVO-85B	Rudder servo (pendant cable) Mating connector: MIL MS3112E14-19SW, CPN 371-8590-020 Contacts: Not removable
SVO-85C	Elevator servo (pendant cable) Mating connector: MIL MS3112E14-19SX, CPN 371-8590-030 Contacts: Not removable

Table 5-2. Mating Connector Hardware and Tooling (Cont).

UNIT	HARDWARE/TOOLING
TDR-90	Mating connector kit: Collins 634-4192-008 Connector: 60-pin Thinline II, Collins 634-1112-001 Contacts: Collins 372-2514-110 (insulation up to 1.27 mm (0.050 in) diameter) Contacts: Collins 372-2514-180 (insulation from 1.27 mm (0.050 in) to 2.03 mm (0.080 in) diameter) TNC connector: Automatic 80-01004-00, CPN 357-7204-010 (straight) or Automatic 301-T2100N, CPN 357-7351-010 (90°) *Tooling:
VHF-422A	Mating connector kit: Collins 634-4192-011 Connector: 52-pin Thinline II, Collins 653-1286-001 Contacts: Collins 372-2514-110 (insulation up to 1.27 mm (0.050 in) diameter) Contacts: Collins 372-2514-180 (insulation from 1.27 mm (0.050 in) to 2.03 mm (0.080 in) diameter) Coax insert: Collins 372-2519-040 *Tooling:
VIR-432	Mating connector kit: Collins 634-4192-012 Connectors: 52-pin Thinline II, Collins 653-1286-001 (qty 2) Contacts: Collins 372-2514-110 (insulation up to 1.27 mm (0.050 in) diameter) Contacts: Collins 372-2514-180 (insulation from 1.27 mm (0.050 in) to 2.03 mm (0.080 in) diameter) Coax inserts: Collins 372-2519-040 (qty 3) *Tooling:
VLF-ANT	Mating connector: Bendix PTO8P-12-10S, CPN 357-7998-010 Contacts: Not removable

*Thinline II Connector Tooling:

Insertion tool: Daniels DAK-188, CPN 359-0697-050
Extraction tool: Daniels DRK-230, CPN 359-0697-020
Crimp tool: Daniels GMT-221, CPN 359-0697-010

Coax extraction tool: Cannon CET-C6B, CPN 370-8040-030
Coax crimp tool: MIL M22520/5-01, CPN 359-8103-000
Crimp tool positioner: Daniels Y142, CPN 359-8103-050

**D-Sub Miniature Connector Tooling:

Insertion/extraction tool: Cannon CIET-20HD, CPN 371-8445-010
Crimp tool: MIL M22520/2-01, CPN 359-8102-010
Crimp tool positioner: MIL M22520/2-02, CPN 359-8102-020

This page intentionally left blank.

5.6 DIAGNOSTIC DESCRIPTION

Built-in system diagnostics monitor reporting LRU's in the avionics system and display both dynamic status reports and recorded fault/exceedance history logs. The following paragraphs describe the various diagnostic functions. These diagnostics are used to troubleshoot the avionics system and to isolate a failed LRU. The technician should become familiar with the capabilities of the diagnostic system before starting the fault isolation procedures provided later in this manual.

Refer to figure 5-2 for a flow diagram showing the diagnostic operation. The technician selects a diagnostic display by pressing the appropriate line key on the MFD. This request for diagnostics is coded onto the MFD mode word and transmitted on the MFD-1 bus to the DAU and to the 2A/2B IOC concentrators. The DAU transmits the MFD mode word on the A-DAU-2 and B-DAU-2 buses to all four IOC concentrators. The FMC-851A/FMC-852A and both FCC computers receive the request for diagnostics through the concentrators. The FMC computers handle the primary system diagnostics; the FCC computers handle the flight control system (FCS) diagnostic functions.

The FMC-851A/FMC-852A routinely monitors individual LRU diagnostic words on the IOC-4 buses from the concentrators, compiles a maintenance file for each reporting LRU, and stores these files in nonvolatile memory. When a request for diagnostics is received, the FMC processes the appropriate information and transmits page formatted display data on the L-FMS-2 dedicated high-speed bus to the MFD.

The FCC computers function together to operate the FCS diagnostic modes. When a request for diagnostics is received, the FCC's process left- and right-side diagnostic information. ASCII display data is transmitted on the L-FCC-1 and R-FCC-1 outputs to the IOC's; this diagnostic data is supplied to the MFD on the IOC-1 buses.

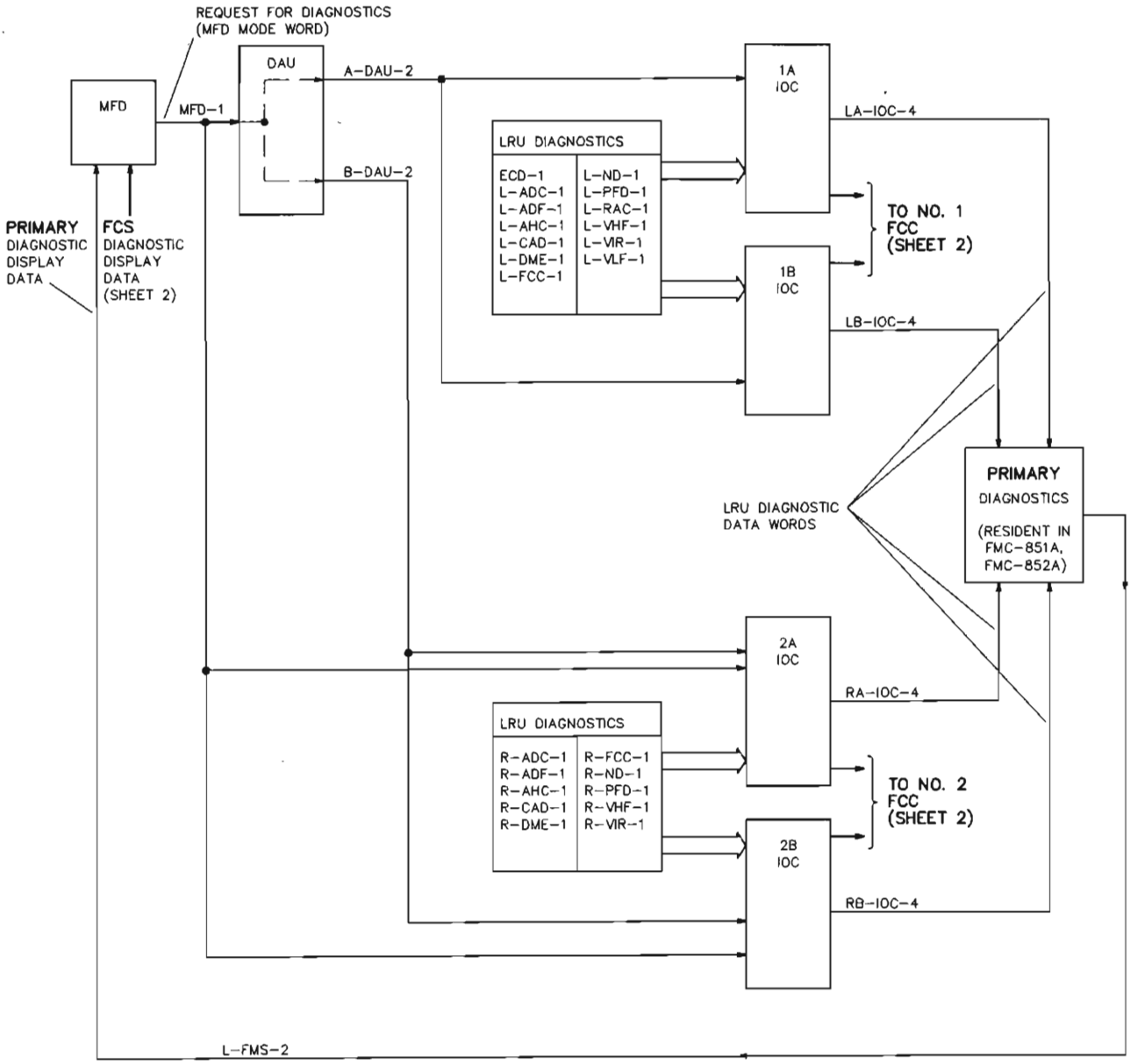

INDIRECT REPORTING LRUS	
FROM	TO
ALI, ASI	ADC
ALT	RAC
MSP	FCC
EDC	DAU
PWR	IOC
RTA	NDs
RTU	RADIOS
CDU	FMC-851A, CDC
CLOCK	DAU

INTERNAL REPORTING LRUS
FMC-851A
FMC-852A
CDC

NON-REPORTING LRUS	
AAP	ICC
ADM	ICU
ANTENNAS	SDD
APP	SDU
CHP	SVO
DBU	TDR
FDU	ATC

CG0-0309-02-AC-0

Diagnostic Configuration
Figure 5-2 (Sheet 1 of 2)

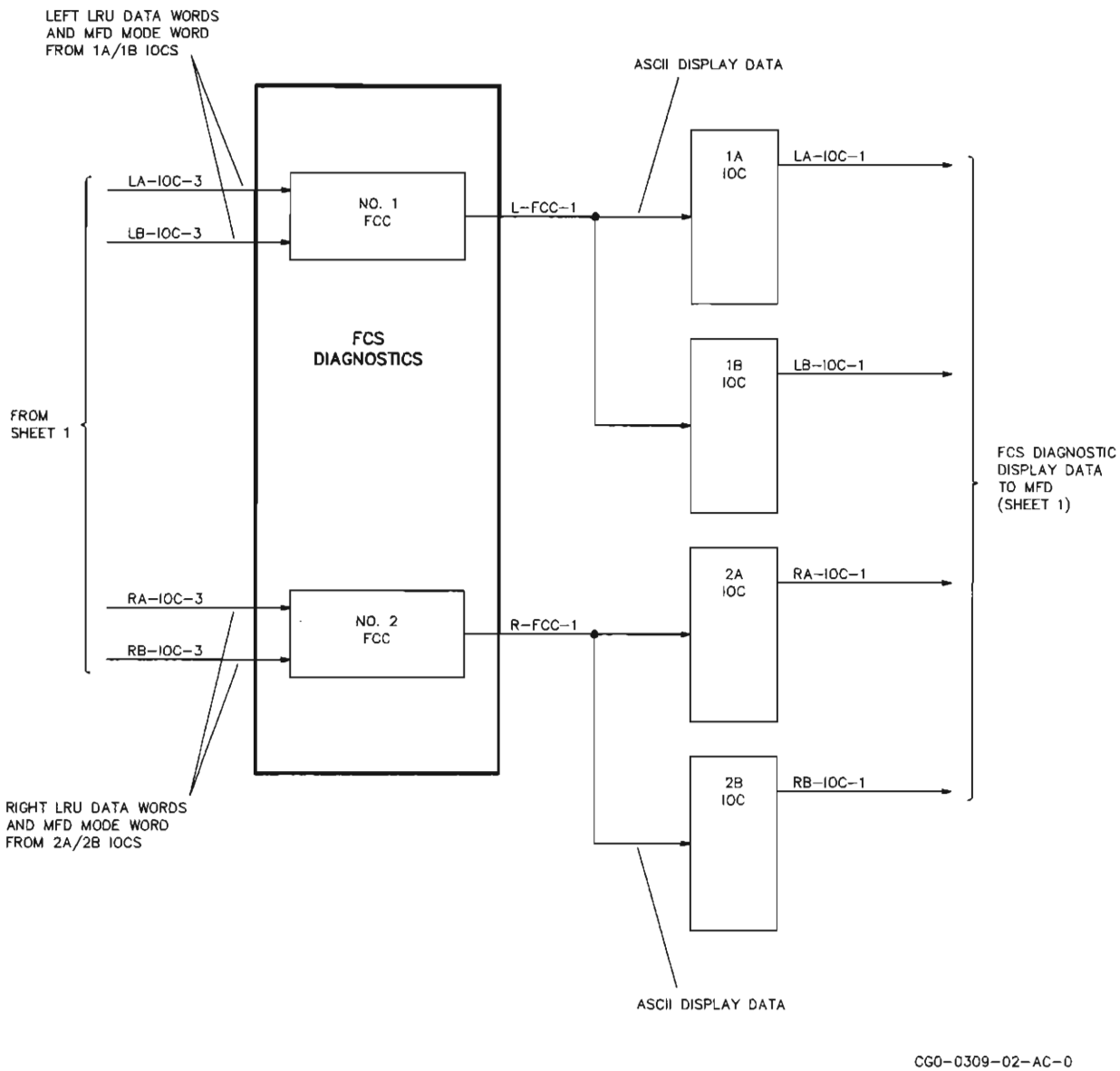

Diagnostic Configuration
Figure 5-2 (Sheet 2 of 2)

This page intentionally left blank.

Refer to figure 5-3. Access the diagnostic modes as described below. Detailed mode descriptions are provided later in this manual.

ENTER DIAGNOSTICS:

Press the IDX line key to display the index page on the MFD. Proceed as follows.

Press the AVIONICS STATUS line key to display a list of failed LRU's.

> This page(s) displays a dynamic readout of each failed LRU, the operational status of that LRU (overheat, off, or failed), and a fault code that explains the fault diagnosis.

or

Press the MAINTENANCE line key to display the maintenance menu page.

- Press the LRU DIAGNOSTIC DATA line key to display LRU diagnostic words.

> These pages display a dynamic readout of the operational status and the diagnostic word received from every reporting LRU.

- Press the LRU FAULT HISTORY line key to display fault logs of recent flights.

> Each log lists all LRU's that failed in that flight with the corresponding time, diagnostic word, fault code, and number of occurrences.

- Press the ENGINE EXCEEDANCES line key to display a history of exceedances recorded in recent flights.

> Each entry lists the type of exceedance, the peak value, threshold exceedance times, and the time/date when the exceedance occurred.

- Press the FCS DIAGNOSTICS line key to access the flight control system diagnostics. The MFD displays instructions to enter the FCS diagnostics.

> Input, report, and output mode diagnostic pages may be displayed. These diagnostics monitor inputs to the FCC computers, report internal FCC parameters, and control/display selected FCC outputs.

EXIT DIAGNOSTICS:

Press the IDX line key to exit diagnostics and display the MFD index page.

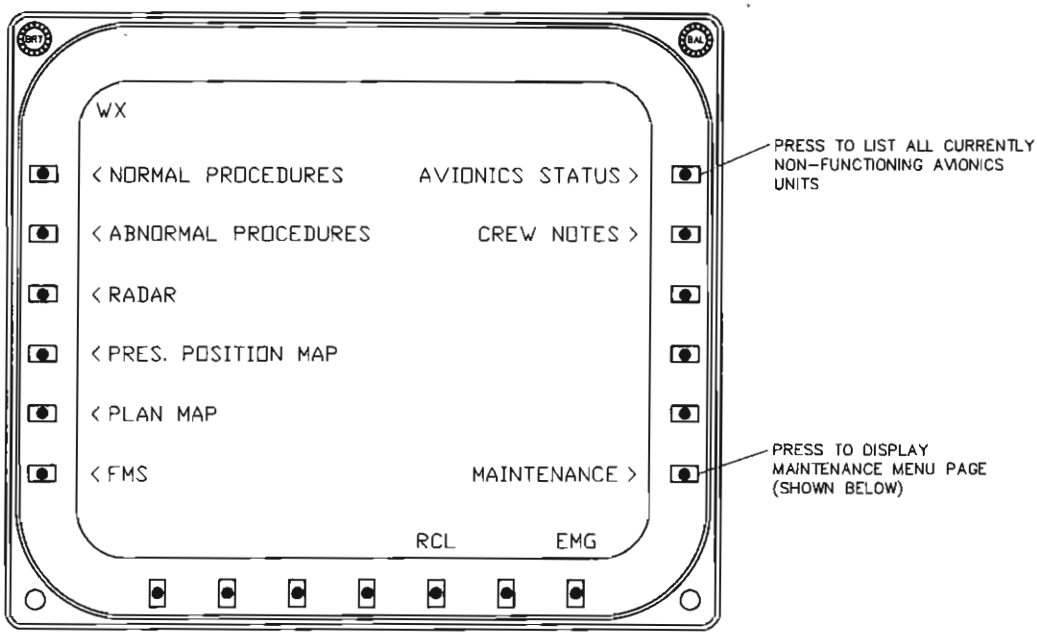

MFD INDEX PAGE

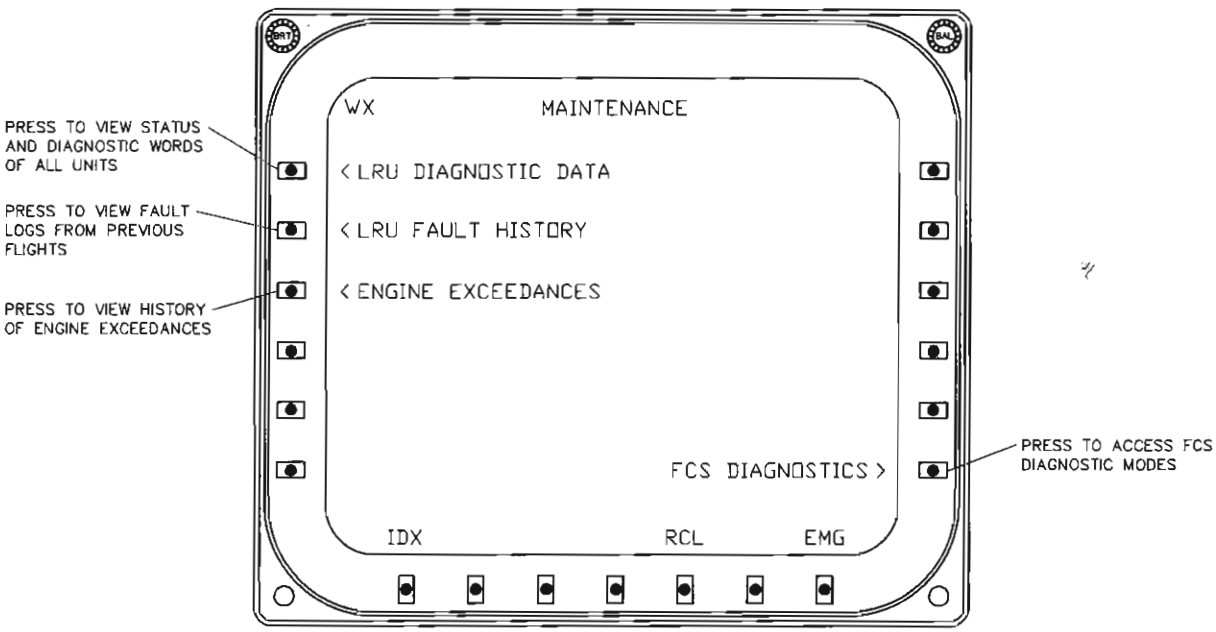

MAINTENANCE MENU PAGE

CGO-0355-08-AC-0

Diagnostic Mode Selection
Figure 5-3

5.6.1 Avionics Status

The AVIONICS STATUS page displays a list of currently nonfunctioning direct, indirect, and internal reporting avionics LRU's (refer to figure 5-2). This is a dynamic display that updates as fault conditions appear or are cleared. "NO FAULTS" annunciates if all reporting units are functioning normally.

Note

Faults are displayed on this page 60 seconds after they are detected. This delay prevents nuisance display of transient conditions.

This list is organized into pages which may contain up to 14 LRU data lines. When more than one page exists, the CHP joystick is used to scroll between pages. Move the joystick down to display the next AVIONICS STATUS page; move the joystick up to display the previous page. Page numbers are displayed in the upper right of the screen.

Refer to figure 5-4. The AVIONICS STATUS page consists of the radar mode line (top line), the MFD mode line (bottom line), an LRU column, a STATUS column, and a fault CODE column.

The radar mode line annunciates the RTA mode and operating status. The MFD mode line labels the functions of active MFD line keys.

Press the IDX line key to display the index page.
Press the RCL line key to recall the previously used checklist.
Press the EMG line key to display the emergency checklist menu.

Current fault status of each reporting unit is displayed in 3-column format. The LRU column names the malfunctioning unit, the STATUS column describes the failure condition, and the fault CODE column lists an internal code which explains why the fault was diagnosed.

The LRU column indicates the unit diagnosed as nonfunctioning. This unit is a probable failed LRU but check the STATUS and CODE columns before taking any action.

The STATUS column indicates OFF-CHK BREAKR, OVERHEAT, or FAILED conditions. The OFF-CHK BREAKR condition means that no diagnostic words were received from that LRU; check that power is applied to the unit before taking further action. The OVERHEAT condition means that an IAPS power supply module (PWR) is overheating; check the cooling system. The FAILED condition means that the diagnostics suspect a failure. Initial troubleshooting effort is to replace this LRU with a known good unit.

The CODE column provides an internal fault code to help determine the cause of a failure. Refer to table 5-3 for an explanation of each fault code. This table names the suspect LRU, a brief description of the fault, and the reason the fault was diagnosed. The system schematics in the theory of operation section of this manual support terms and bus names used in the reason column.

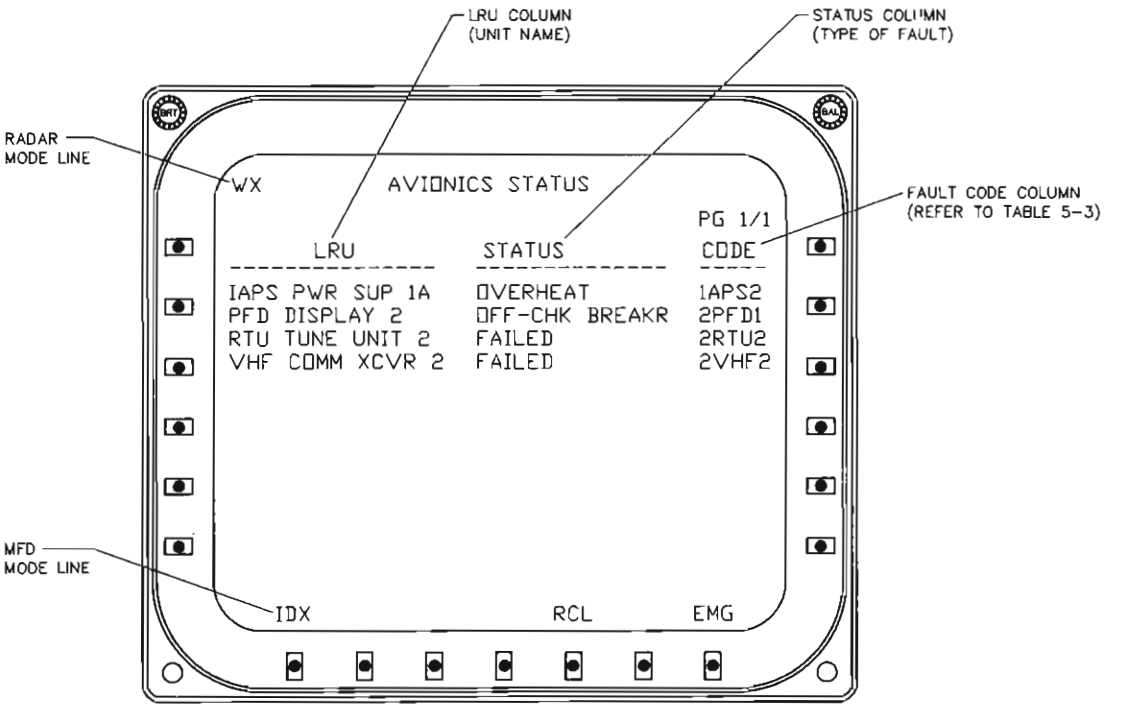

NOTE:
1. FAULTS DISPLAY ON THE AVIONICS STATUS PAGE 60 SECONDS AFTER THEY OCCUR.

CGO-0355-08-AC-0

Avionics Status Page
Figure 5-4

Table 5-3. Fault Code Explanations.

FAULT CODE	DESCRIPTION	REASON
These codes are displayed on the AVIONICS STATUS and LRU FAULT HISTORY pages.		
ADF RECEIVER 1		
1ADF1	No output data; check circuit breaker.	L-ADF-1 bus to the 1A and 1B IOC's is inactive at both units.
1ADF2	Various circuits failed.	An internal ADF fault is detected.
1ADF3	RTU 1 input failed.	L-RTU-2 bus from the #1 RTU to the left COM/NAV radios is inactive at the #1 ADF input but active elsewhere.
1ADF4	RTU 2 input failed.	R-RTU-1 bus from the #2 RTU to the left COM/NAV radios is inactive at the #1 ADF input but active elsewhere.
ADF RECEIVER 2 (Optional)		
2ADF1	No output data; check circuit breaker.	R-ADF-1 bus to the 2A and 2B IOC's is inactive at both units.
2ADF2	Various circuits failed.	An internal ADF fault is detected.
2ADF3	RTU 2 input failed.	R-RTU-2 bus from the #2 RTU to the right COM/NAV radios is inactive at the #2 ADF input but active elsewhere.
2ADF4	RTU 1 input failed.	L-RTU-1 bus from the #1 RTU to the right COM/NAV radios is inactive at the #2 ADF input but active elsewhere.
AHRS COMPUTER 1 (Not monitored while AHC is initializing)		
1AHC1	No output data; check circuit breaker.	L-AHC-1 bus to the 1A and 1B IOC's is inactive at both units.
1AHC2	Various circuits failed.	An internal AHC fault is detected.
1AHC3	Display output 1 failed.	L-AHC-2 bus to the two left large displays is inactive at both units.
1AHC4	Display output 2 failed.	L-AHC-3 bus to the two right large displays is inactive at both units.
1AHC5	Flux detector failed.	A flux detector fault is detected. Suspect either an internal AHC fault or a failed FDU.
AHRS COMPUTER 2 (Not monitored while AHC is initializing)		
2AHC1	No output data; check circuit breaker.	R-AHC-1 bus to the 2A and 2B IOC's is inactive at both units.
2AHC2	Various circuits failed.	An internal AHC fault is detected.
2AHC3	Display output 1 failed.	R-AHC-3 bus to the two left large displays is inactive at both units.

ADDENDUM 2

TO

STARSHIP 1 AVIONICS SYSTEM

SYSTEM MANUAL

PART NUMBER 523-0774076, DATED 14 JAN 1989

Insert this addendum sheet facing page 5-18 of the Maintenance Section of the manual

The following fault code explanations should be changed:

1ADF2	Various circuits failed.	An internal ADF <u>or ANT</u> fault is detected.
2ADF2	Various circuits failed.	An internal ADF <u>or ANT</u> fault is detected.

Table 5-3. Fault Code Explanations (Cont).

FAULT CODE	DESCRIPTION	REASON
AHRS COMPUTER 2 (Not monitored while AHC is initializing) (Cont)		
2AHC4	Display output 2 failed.	R-AHC-2 bus to the two right large displays is inactive at both units.
2AHC5	Flux detector failed.	A flux detector fault is detected. Suspect either an internal AHC fault or a failed FDU.
AIRCRAFT CLOCK 1 (Not monitored if DAU channel A diagnostics are lost)		
1CLK1	No output data; check circuit breaker.	CLK-1 bus to the DAU is inactive at the DAU. Suspect either the clock output or a failed DAU input.
1CLK2	Various circuits failed.	An internal clock fault is detected.
AIRCRAFT CLOCK 2 (Not monitored if DAU channel B diagnostics are lost)		
2CLK1	No output data; check circuit breaker.	CLK-2 bus to the DAU is inactive at the DAU. Suspect either the clock output or a failed DAU input.
2CLK2	Various circuits failed.	An internal clock fault is detected.
AIR DATA CMPT 1		
1ADC1	No output data; check circuit breaker.	L-ADC-1 bus to the 1A and 1B IOC's is inactive at both units.
1ADC2	Various circuits failed.	An internal ADC fault is detected.
1ADC3	IOC 1A input failed.	LA-GP BUS 1 bus from the 1A IOC is inactive at the #1 ADC input but active elsewhere (DAU).
1ADC4	Output to #2 ADC failed.	L-ADC XTLK OUT bus to the #2 ADC is inactive at the #2 ADC. Suspect either the #1 ADC output or a failed #2 ADC input.
1ADC5	Output to AHC failed.	L-ADC-2 bus to the #1 AHC is inactive at the AHC. Suspect either the ADC output or a failed AHC input.
AIR DATA CMPT 2		
2ADC1	No output data; check circuit breaker.	R-ADC-1 bus to the 2A and 2B IOC's is inactive at both units.
2ADC2	Various circuits failed.	An internal ADC fault is detected.
2ADC3	IOC 2A input failed.	RA-GP BUS 1 bus from the 2A IOC is inactive at the #2 ADC input but active elsewhere (DAU).
2ADC4	Output to #1 ADC failed.	R-ADC XTLK OUT bus to the #1 ADC is inactive at the #1 ADC. Suspect either the #2 ADC output or a failed #1 ADC input.

Table 5-3. Fault Code Explanations (Cont).

FAULT CODE	DESCRIPTION	REASON
AIR DATA CMPT 2 (Cont)		
2ADC5	Output to AHC failed.	R-ADC-2 bus to the #2 AHC is inactive at the AHC. Suspect either the ADC output or a failed AHC input.
AIR SPD DSPLY 1		
1ASI2	Various circuits failed.	An internal ASI fault is detected or power is not applied to the unit.
AIR SPD DSPLY 2		
2ASI2	Various circuits failed.	An internal ASI fault is detected or power is not applied to the unit.
ALTITUDE DSPLY 1		
1ALI1	No output data; check circuit breaker.	L-ALI OUT bus to the #1 ADC is inactive at the ADC. Suspect either the ALI output or a failed ADC input.
1ALI2	Various circuits failed.	An internal ALI fault is detected.
ALTITUDE DSPLY 2		
2ALI1	No output data; check circuit breaker.	R-ALI OUT bus to the #2 ADC is inactive at the ADC. Suspect either the ALI output or a failed ADC input.
2ALI2	Various circuits failed.	An internal ALI fault is detected.
CDU DISPLAY 1 (Not monitored when CDU is transferred)		
1CDU1	No output data; check circuit breaker.	L-CDU-1 bus to the FMC-851A is inactive at the FMC. Suspect either the CDU output or a failed FMC input.
1CDU2	Various circuits failed.	An internal CDU fault is detected.
CDU DISPLAY 2 (Not monitored when CDU is transferred)		
2CDU1	No output data; check circuit breaker.	R-CDU-1 bus to the CDC is inactive at the CDC. Suspect either the CDU output or a failed CDC input.
2CDU2	Various circuits failed.	An internal CDU fault is detected.
DATA ACQ UNIT A		
DAUA1	No output data; check circuit breaker.	A-DAU-2 bus to the 1A and 1B IOC's is inactive at both units.
DAUA2	Various circuits failed.	An internal DAU fault is detected.

Table 5-3. Fault Code Explanations (Cont).

FAULT CODE	DESCRIPTION	REASON
DATA ACQ UNIT A (Cont)		
DAUA3	IOC 2A input failed.	RA-GP BUS 1 bus from the 2A IOC is inactive at the DAU channel A input but active elsewhere.
DAUA4	MFD input failed.	MFD-1 bus from the MFD is inactive at the DAU channel A input but active elsewhere.
DAUA5	IOC 1A input failed.	LA-GP BUS 1 bus from the 1A IOC is inactive at the DAU channel A input but active elsewhere.
DAUA6	ECD input failed.	ECD-1 bus from the ECD is inactive at the DAU channel A input but active elsewhere.
DAUA7	Output to ECD/MFD failed.	A-DAU-1 bus to the ECD is inactive at the ECD. Suspect either the DAU output or a failed ECD input.
DAUA8	Output to ECD/MFD failed.	A-DAU-1 bus to the MFD is inactive at the MFD. Suspect either the DAU output or a failed MFD input.
DATA ACQ UNIT B		
DAUB1	No output data; check circuit breaker.	B-DAU-2 bus to the 2A and 2B IOC's is inactive at both units.
DAUB2	Various circuits failed.	An internal DAU fault is detected.
DAUB3	IOC 2A input failed.	RA-GP BUS 1 bus from the 2A IOC is inactive at the DAU channel B input but active elsewhere.
DAUB4	MFD input failed.	MFD-1 bus from the MFD is inactive at the DAU channel B input but active elsewhere.
DAUB5	IOC 1A input failed.	LA-GP BUS 1 bus from the 1A IOC is inactive at the DAU channel B input but active elsewhere.
DAUB6	ECD input failed.	ECD-1 bus from the ECD is inactive at the DAU channel B input but active elsewhere.
DAUB7	Output to ECD/MFD failed.	B-DAU-1 bus to the ECD is inactive at the ECD. Suspect either the DAU output or a failed ECD input.
DAUB8	Output to ECD/MFD failed.	B-DAU-1 bus to the MFD is inactive at the MFD. Suspect either the DAU output or a failed MFD input.
DME 1		
1DME1	No output data; check circuit breaker.	L-DME-1 bus to the 1A and 1B IOC's is inactive at both units.
1DME2	Various circuits failed.	An internal DME fault is detected.
1DME3	RTU 1 input failed.	L-RTU-2 bus from the #1 RTU to the left COM/NAV radios is inactive at the #1 DME input but active elsewhere.

Table 5-3. Fault Code Explanations (Cont).

FAULT CODE	DESCRIPTION	REASON
DME 1 (Cont)		
1DME4	RTU 2 input failed.	R-RTU-1 bus from the #2 RTU to the left COM/NAV radios is inactive at the #1 DME input but active elsewhere.
DME 2		
2DME1	No output data; check circuit breaker.	R-DME-1 bus to the 2A and 2B IOC's is inactive at both units.
2DME2	Various circuits failed.	An internal DME fault is detected.
2DME3	RTU 2 input failed.	R-RTU-2 bus from the #2 RTU to the right COM/NAV radios is inactive at the #2 DME input but active elsewhere.
2DME4	RTU 1 input failed.	L-RTU-1 bus from the #1 RTU to the right COM/NAV radios is inactive at the #2 DME input but active elsewhere.
EDC CONC 1 A (Not monitored if DAU channel A diagnostics are lost)		
1AEC1	No output data; check circuit breaker.	L-EDC-1 bus to the DAU is inactive at the DAU. Suspect either the EDC output or a failed DAU input.
1AEC2	Various circuits failed.	An internal EDC fault is detected.
EDC CONC 1 B (Not monitored if DAU channel B diagnostics are lost)		
1BEC1	No output data; check circuit breaker.	L-EDC-2 bus to the DAU is inactive at the DAU. Suspect either the EDC output or a failed DAU input.
1BEC2	Various circuits failed.	An internal EDC fault is detected.
EDC CONC 2 A (Not monitored if DAU channel A diagnostics are lost)		
2AEC1	No output data; check circuit breaker.	R-EDC-1 bus to the DAU is inactive at the DAU. Suspect either the EDC output or a failed DAU input.
2AEC2	Various circuits failed.	An internal EDC fault is detected.
EDC CONC 2 B (Not monitored if DAU channel B diagnostics are lost)		
2BEC1	No output data; check circuit breaker.	R-EDC-2 bus to the DAU is inactive at the DAU. Suspect either the EDC output or a failed DAU input.
2BEC2	Various circuits failed.	An internal EDC fault is detected.

ADDENDUM 2

TO

STARSHIP 1 AVIONICS SYSTEM

SYSTEM MANUAL

PART NUMBER 523-0774076, DATED 14 JAN 1989

Insert this addendum sheet facing page 5-22 of the Maintenance Section of the manual

The following fault code explanations should be changed:

1AEC2	Various circuits failed.	An internal EDC fault <u>or input connector failure</u> is detected. <u>If 1BEC2 is also present a sensor may have failed; check LRU DIAGNOSTIC DATA page.</u>
1BEC2	Various circuits failed.	An internal EDC fault <u>or input connector failure</u> is detected. <u>If 1AEC2 is also present a sensor may have failed; check LRU DIAGNOSTIC DATA page.</u>
2AEC2	Various circuits failed.	An internal EDC fault <u>or input connector failure</u> is detected. <u>If 2BEC2 is also present a sensor may have failed; check LRU DIAGNOSTIC DATA page.</u>
2BEC2	Various circuits failed.	An internal EDC fault <u>or input connector failure</u> is detected. <u>If 2AEC2 is also present a sensor may have failed; check LRU DIAGNOSTIC DATA page.</u>

Table 5-3. Fault Code Explanations (Cont).

FAULT CODE	DESCRIPTION	REASON
EICAS DISPLAY		
ICAS1	No output data; check circuit breaker.	ECD-1 bus to the 1A and 1B IOC's is inactive at both units.
ICAS2	Various circuits failed.	An internal ECD fault is detected.
ICAS3	IOC 1A input failed.	LA-IOC-1 bus from the 1A IOC to the six large displays is inactive at the ECD input but active elsewhere.
ICAS4	IOC 1B input failed.	LB-IOC-1 bus from the 1B IOC to the six large displays is inactive at the ECD input but active elsewhere.
ICAS5	IOC 2A input failed.	RA-IOC-1 bus from the 2A IOC to the six large displays is inactive at the ECD input but active elsewhere.
ICAS6	IOC 2B input failed.	RB-IOC-1 bus from the 2B IOC to the six large displays is inactive at the ECD input but active elsewhere.
IAPS CDC CPLR 2B		
2BCD2	Various circuits failed.	An internal CDC fault is detected.
2BCD3	IOC 1A input failed.	LA-IOC-4 bus from the 1A IOC to the CDC and FMC-851A is inactive at the CDC input but active at the FMC.
2BCD4	IOC 1B input failed.	LB-IOC-4 bus from the 1B IOC to the CDC and FMC-851A is inactive at the CDC input but active at the FMC.
2BCD5	IOC 2A input failed.	RA-IOC-4 bus from the 2A IOC to the CDC and FMC-851A is inactive at the CDC input but active at the FMC.
2BCD6	IOC 2B input failed.	RB-IOC-4 bus from the 2B IOC to the CDC and FMC-851A is inactive at the CDC input but active at the FMC.
2BCD7	Output to FMC failed.	R-FMS-4 bus to the FMC-851A is inactive at the FMC. Suspect either the CDC output or a failed FMC input.
IAPS FCC CMPT 1A (Not monitored if the 1A section of IAPS has lost power; the 1A IOC bus to the FMC must be active)		
1AFC2	Output to IOC's failed.	L-FCC-1 bus to the 1A and 1B IOC's is inactive at both units.
1AFC3	Various circuits failed.	An internal FCC fault is detected.
1AFC4	Output to #2 FCC failed.	X CHAN A bus to the #2 FCC is inactive at the #2 FCC. Suspect either the #1 FCC output or a failed #2 FCC input.
1AFC5	AHC input failed.	L-AHC-1 bus from the AHC to the FCC and the 1A/1B IOC's is inactive at the FCC input but active at the IOC's.

Table 5-3. Fault Code Explanations (Cont).

FAULT CODE	DESCRIPTION	REASON
IAPS FCC CMPT 2A (Not monitored if the 2A section of IAPS has lost power; the 2A IOC bus to the FMC must be active)		
2AFC2	Output to IOC's failed.	R-FCC-1 bus to the 2A and 2B IOC's is inactive at both units.
2AFC3	Various circuits failed.	An internal FCC fault is detected.
2AFC4	Output to #1 FCC failed.	X CHAN B bus to the #1 FCC is inactive at the #1 FCC. Suspect either the #2 FCC output or a failed #1 FCC input.
2AFC5	AHC input failed.	R-AHC-1 bus from the AHC to the FCC and the 2A/2B IOC's is inactive at the FCC input but active at the IOC's.
IAPS FMC 851 1B		
1B512	Various circuits failed.	An internal FMC fault is detected.
1B513	IOC 1A input failed.	LA-IOC-4 bus from the 1A IOC to the FMC and CDC is inactive at the FMC input but active at the CDC; crosstalk from the CDC is active.
1B514	IOC 1B input failed.	LB-IOC-4 bus from the 1B IOC to the FMC and CDC is inactive at the FMC input but active at the CDC; crosstalk from the CDC is active.
1B515	IOC 2A input failed.	RA-IOC-4 bus from the 2A IOC to the FMC and CDC is inactive at the FMC input but active at the CDC; crosstalk from the CDC is active.
1B516	IOC 2B input failed.	RB-IOC-4 bus from the 2B IOC to the FMC and CDC is inactive at the FMC input but active at the CDC; crosstalk from the CDC is active.
1B517	Output to CDC failed.	L-FMS-4 bus to the CDC is inactive at the CDC. Suspect either the FMC output or a failed CDC input.
IAPS FMC 852 1B		
1B522	Various circuits failed.	An internal FMC fault is detected.
1B523	Battery failed.	Replace the FMC-852A battery.
IAPS IOC CONC 1A (Not monitored if the 1A section of IAPS has lost power; the #1 FCC bus to either the 1A or 1B IOC must be active)		
1AIO2	Output to FMC failed.	LA-IOC-4 bus to the FMC-851A and CDC is inactive at both units.
1AIO3	Display output failed.	LA-IOC-1 bus to the six large displays is inactive at more than two units.
1AIO4	GP BUS 1 output failed.	LA-GP BUS 1 is inactive at the #1 ADC and at both channels of the DAU.
1AIO5	Various circuits failed.	An internal IOC fault is detected.
1AIO6	ADC 1 input failed.	L-ADC-1 bus from the #1 ADC is inactive at the 1A IOC input but active at 1B IOC input.

Table 5-3. Fault Code Explanations (Cont).

FAULT CODE	DESCRIPTION	REASON
IAPS IOC CONC 1A (Not monitored if the 1A section of IAPS has lost power; the #1 FCC bus to either the 1A or 1B IOC must be active) (Cont)		
1AIO7	ADF 1 input failed.	L-ADF-1 bus from the #1 ADF is inactive at the 1A IOC input but active at 1B IOC input.
1AIO8	CAD 1 input failed.	L-CAD-1 bus from the #1 CAD is inactive at the 1A IOC input but active at 1B IOC input.
1AIO9	DME 1 input failed.	L-DME-1 bus from the #1 DME is inactive at the 1A IOC input but active at 1B IOC input.
1AIO10	VHF 1 input failed.	L-VHF-1 bus from the #1 VHF is inactive at the 1A IOC input but active at 1B IOC input.
1AIO11	VIR 1 input failed.	L-VIR-1 bus from the #1 VIR is inactive at the 1A IOC input but active at 1B IOC input.
1AIO12	RAC input failed.	L-RAC-1 bus from the RAC is inactive at the 1A IOC input but active at 1B IOC input.
1AIO13	VLF input failed.	L-VLF-1 bus from the VLF is inactive at the 1A IOC input but active at 1B IOC input.
1AIO14	ECD input failed.	ECD-1 bus from the ECD is inactive at the 1A IOC input but active at 1B IOC input.
1AIO15	PFD 1 input failed.	L-PFD-1 bus from the #1 PFD is inactive at the 1A IOC input but active at 1B IOC input.
1AIO16	ND 1 input failed.	L-ND-1 bus from the #1 ND is inactive at the 1A IOC input but active at 1B IOC input.
1AIO17	FCC 1 input failed.	L-FCC-1 bus from the #1 FCC is inactive at the 1A IOC input but active at 1B IOC input.
1AIO18	AHC 1 input failed.	L-AHC-1 bus from the #1 AHC is inactive at the 1A IOC input but active at 1B IOC and FCC inputs.
1AIO19	DAU A input failed.	A-DAU-2 bus from channel A of the DAU is inactive at the 1A IOC input but active at 1B IOC input.
1AIO20	Output to FCC failed.	LA-IOC-3 bus to the #1 FCC is inactive at the FCC. Suspect either the IOC output or a failed FCC input.
IAPS IOC CONC 1B		
1BIO2	Output to FMC failed.	LB-IOC-4 bus to the FMC-851A and CDC is inactive at both units.
1BIO3	Display output failed.	LB-IOC-1 bus to the six large displays is inactive at more than two units.
1BIO4	Various circuits failed.	An internal IOC fault is detected.
1BIO5	ADC 1 input failed.	L-ADC-1 bus from the #1 ADC is inactive at the 1B IOC input but active at 1A IOC input.

Table 5-3. Fault Code Explanations (Cont).

FAULT CODE	DESCRIPTION	REASON
IAPS IOC CONC 1B (Cont)		
1BIO6	ADF 1 input failed.	L-ADF-1 bus from the #1 ADF is inactive at the 1B IOC input but active at 1A IOC input.
1BIO7	CAD 1 input failed.	L-CAD-1 bus from the #1 CAD is inactive at the 1B IOC input but active at 1A IOC input.
1BIO8	DME 1 input failed.	L-DME-1 bus from the #1 DME is inactive at the 1B IOC input but active at 1A IOC input.
1BIO9	VHF 1 input failed.	L-VHF-1 bus from the #1 VHF is inactive at the 1B IOC input but active at 1A IOC input.
1BIO10	VIR 1 input failed.	L-VIR-1 bus from the #1 VIR is inactive at the 1B IOC input but active at 1A IOC input.
1BIO11	RAC input failed.	L-RAC-1 bus from the RAC is inactive at the 1B IOC input but active at 1A IOC input.
1BIO12	VLF input failed.	L-VLF-1 bus from the VLF is inactive at the 1B IOC input but active at 1A IOC input.
1BIO13	ECD input failed.	ECD-1 bus from the ECD is inactive at the 1B IOC input but active at 1A IOC input.
1BIO14	PFD 1 input failed.	L-PFD-1 bus from the #1 PFD is inactive at the 1B IOC input but active at 1A IOC input.
1BIO15	ND 1 input failed.	L-ND-1 bus from the #1 ND is inactive at the 1B IOC input but active at 1A IOC input.
1BIO16	FCC 1 input failed.	L-FCC-1 bus from the #1 FCC is inactive at the 1B IOC input but active at 1A IOC input.
1BIO17	AHC 1 input failed.	L-AHC-1 bus from the #1 AHC is inactive at the 1B IOC input but active at 1A IOC and FCC inputs.
1BIO18	DAU A input failed.	A-DAU-2 bus from channel A of the DAU is inactive at the 1B IOC input but active at 1A IOC input.
1BIO19	GP BUS 2 output failed.	LB-GP BUS 2 is inactive at the VLF. Suspect either the IOC output or a failed VLF input.
1BIO20	Output to FCC failed.	LB-IOC-3 bus to the #1 FCC is inactive at the FCC. Suspect either the IOC output or a failed FCC input.
1BIO21	GP BUS 3 output failed.	LB-GP BUS 3 is inactive at the RTA. Suspect either the IOC output or a failed RTA input.

Table 5-3. Fault Code Explanations (Cont).

FAULT CODE	DESCRIPTION	REASON
IAPS IOC CONC 2A (Not monitored if the 2A section of IAPS has lost power; the #2 FCC bus to either the 2A or 2B IOC must be active)		
2AIO2	Output to FMC failed.	RA-IOC-4 bus to the FMC-851A and CDC is inactive at both units.
2AIO3	Display output failed.	RA-IOC-1 bus to the six large displays is inactive at more than two units.
2AIO4	GP BUS 1 output failed.	RA-GP BUS 1 is inactive at the #2 ADC and at both channels of the DAU.
2AIO5	Various circuits failed.	An internal IOC fault is detected.
2AIO6	ADC 2 input failed.	R-ADC-1 bus from the #2 ADC is inactive at the 2A IOC input but active at 2B IOC input.
2AIO7	ADF 2 input failed.	R-ADF-1 bus from the #2 ADF is inactive at the 2A IOC input but active at 2B IOC input.
2AIO8	CAD 2 input failed.	R-CAD-1 bus from the #2 CAD is inactive at the 2A IOC input but active at 2B IOC input.
2AIO9	DME 2 input failed.	R-DME-1 bus from the #2 DME is inactive at the 2A IOC input but active at 2B IOC input.
2AIO10	VHF 2 input failed.	R-VHF-1 bus from the #2 VHF is inactive at the 2A IOC input but active at 2B IOC input.
2AIO11	VIR 2 input failed.	R-VIR-1 bus from the #2 VIR is inactive at the 2A IOC input but active at 2B IOC input.
2AIO12	MFD input failed.	MFD-1 bus from the MFD is inactive at the 2A IOC input but active at 2B IOC input.
2AIO13	PFD 2 input failed.	R-PFD-1 bus from the #2 PFD is inactive at the 2A IOC input but active at 2B IOC input.
2AIO14	ND 2 input failed.	R-ND-1 bus from the #2 ND is inactive at the 2A IOC input but active at 2B IOC input.
2AIO15	FCC 2 input failed.	R-FCC-1 bus from the #2 FCC is inactive at the 2A IOC input but active at 2B IOC input.
2AIO16	AHC 2 input failed.	R-AHC-1 bus from the #2 AHC is inactive at the 2A IOC input but active at 2B IOC and FCC inputs.
2AIO17	DAU B input failed.	B-DAU-2 bus from channel B of the DAU is inactive at the 2A IOC input but active at 2B IOC input.
2AIO18	Output to FCC failed.	RA-IOC-3 bus to the #2 FCC is inactive at the FCC. Suspect either the IOC output or a failed FCC input.

Table 5-3. Fault Code Explanations (Cont).

FAULT CODE	DESCRIPTION	REASON
IAPS IOC CONC 2B (Not monitored if the 2B section of IAPS has lost power; the R-FMS-4 crosstalk bus must be active)		
2BIO2	Output to FMC failed.	RB-IOC-4 bus to the FMC-851A and CDC is inactive at both units.
2BIO3	Display output failed.	RB-IOC-1 bus to the six large displays is inactive at more than two units.
2BIO4	Various circuits failed.	An internal IOC fault is detected.
2BIO5	ADC 2 input failed.	R-ADC-1 bus from the #2 ADC is inactive at the 2B IOC input but active at 2A IOC input.
2BIO6	ADF 2 input failed.	R-ADF-1 bus from the #2 ADF is inactive at the 2B IOC input but active at 2A IOC input.
2BIO7	CAD 2 input failed.	R-CAD-1 bus from the #2 CAD is inactive at the 2B IOC input but active at 2A IOC input.
2BIO8	DME 2 input failed.	R-DME-1 bus from the #2 DME is inactive at the 2B IOC input but active at 2A IOC input.
2BIO9	VHF 2 input failed.	R-VHF-1 bus from the #2 VHF is inactive at the 2B IOC input but active at 2A IOC input.
2BIO10	VIR 2 input failed.	R-VIR-1 bus from the #2 VIR is inactive at the 2B IOC input but active at 2A IOC input.
2BIO11	MFD input failed.	MFD-1 bus from the MFD is inactive at the 2B IOC input but active at 2A IOC input.
2BIO12	PFD 2 input failed.	R-PFD-1 bus from the #2 PFD is inactive at the 2B IOC input but active at 2A IOC input.
2BIO13	ND 2 input failed.	R-ND-1 bus from the #2 ND is inactive at the 2B IOC input but active at 2A IOC input.
2BIO14	FCC 2 input failed.	R-FCC-1 bus from the #2 FCC is inactive at the 2B IOC input but active at 2A IOC input.
2BIO15	AHC 2 input failed.	R-AHC-1 bus from the #2 AHC is inactive at the 2B IOC input but active at 2A IOC and FCC inputs.
2BIO16	DAU B input failed.	B-DAU-2 bus from channel B of the DAU is inactive at the 2B IOC input but active at 2A IOC input.
2BIO17	GP BUS 2 output failed.	RB-GP BUS 2 is inactive at the VLF. Suspect either the IOC output or a failed VLF input.
2BIO18	Output to FCC failed.	RB-IOC-3 bus to the #2 FCC is inactive at the FCC. Suspect either the IOC output or a failed FCC input.
2BIO19	GP BUS 3 output failed.	RB-GP BUS 3 is inactive at the RTA. Suspect either the IOC output or a failed RTA input.

Table 5-3. Fault Code Explanations (Cont).

FAULT CODE	DESCRIPTION	REASON
IAPS PWR SUP 1A		
1APS1	Various circuits failed; check circuit breaker.	An internal PWR 1A fault is suspected. The 1A IOC and #1 FCC outputs are both inactive; suspect the power supply.
1APS2	Power supply overheated.	The 1B IOC detected a tripped temperature monitor from the 1A PWR.
1APS3	Power supply overheated.	The 1A IOC detected a tripped temperature monitor from the 1A PWR.
IAPS PWR SUP 1B		
1BPS1	Various circuits failed; check circuit breaker.	An internal PWR 1B fault is suspected. The FMC detected an inactive input from the 1B IOC and no FCC data from the 1A IOC; suspect the power supply.
1BPS2	Power supply overheated.	The 1A IOC detected a tripped temperature monitor from the 1B PWR.
1BPS3	Power supply overheated.	The 1B IOC detected a tripped temperature monitor from the 1B PWR.
IAPS PWR SUP 2A		
2APS1	Various circuits failed; check circuit breaker.	An internal PWR 2A fault is suspected. The 2A IOC and #2 FCC outputs are both inactive; suspect the power supply.
2APS2	Power supply overheated.	The 2B IOC detected a tripped temperature monitor from the 2A PWR.
2APS3	Power supply overheated.	The 2A IOC detected a tripped temperature monitor from the 2A PWR.
IAPS PWR SUP 2B		
2BPS1	Various circuits failed; check circuit breaker.	An internal PWR 2B fault is suspected. The 2B IOC and CDC outputs are both inactive; suspect the power supply.
2BPS2	Power supply overheated.	The 2A IOC detected a tripped temperature monitor from the 2B PWR.
2BPS3	Power supply overheated.	The 2B IOC detected a tripped temperature monitor from the 2B PWR.
MFD DISPLAY		
MFD1	No output data; check circuit breaker.	MFD-1 bus to the 2A and 2B IOC's is inactive at both units.
MFD2	Various circuits failed.	An internal MFD fault is detected.
MFD3	IOC 1A input failed.	LA-IOC-1 bus from the 1A IOC to the six large displays is inactive at the MFD input but active elsewhere.
MFD4	IOC 1B input failed.	LB-IOC-1 bus from the 1B IOC to the six large displays is inactive at the MFD input but active elsewhere.

Table 5-3. Fault Code Explanations (Cont).

FAULT CODE	DESCRIPTION	REASON
MFD DISPLAY (Cont)		
MFD5	IOC 2A input failed.	RA-IOC-1 bus from the 2A IOC to the six large displays is inactive at the MFD input but active elsewhere.
MFD6	IOC 2B input failed.	RB-IOC-1 bus from the 2B IOC to the six large displays is inactive at the MFD input but active elsewhere.
MFD7	RTA input failed.	WXT-1 bus from the RTA to the ND's and MFD is inactive at the MFD input but active elsewhere.
MODE SEL PANEL 1		
1MSP2	Various circuits failed; check +5 V ISOL power.	The MSP TO FCC A bus is inactive at the #1 FCC input. Verify +5 V ISOL power from 1A PWR to MSP. Then suspect an internal MSP fault, a failed MSP output, or a failed FCC input.
MODE SEL PANEL 2		
2MSP2	Various circuits failed; check +5 V ISOL power.	The MSP TO FCC B bus is inactive at the #2 FCC input. Verify +5 V ISOL power from 2A PWR to MSP. Then suspect an internal MSP fault, a failed MSP output, or a failed FCC input.
NAV DISPLAY 1		
1ND1	No output data; check circuit breaker.	L-ND-1 bus to the 1A and 1B IOC's is inactive at both units.
1ND2	Various circuits failed.	An internal ND fault is detected.
1ND3	IOC 1A input failed.	LA-IOC-1 bus from the 1A IOC to the six large displays is inactive at the ND input but active elsewhere.
1ND4	IOC 1B input failed.	LB-IOC-1 bus from the 1B IOC to the six large displays is inactive at the ND input but active elsewhere.
1ND5	IOC 2A input failed.	RA-IOC-1 bus from the 2A IOC to the six large displays is inactive at the ND input but active elsewhere.
1ND6	IOC 2B input failed.	RB-IOC-1 bus from the 2B IOC to the six large displays is inactive at the ND input but active elsewhere.
1ND7	AHC 2 input failed.	R-AHC-3 bus from the #2 AHC to the two left large displays is inactive at the ND input but active at the PFD input.
1ND8	AHC 1 input failed.	L-AHC-2 bus from the #1 AHC to the two left large displays is inactive at the ND input but active at the PFD input.
1ND9	RTA input failed.	WXT-1 bus from the RTA to the ND's and MFD is inactive at the #1 ND input but active elsewhere.

Table 5-3. Fault Code Explanations (Cont).

FAULT CODE	DESCRIPTION	REASON
NAV DISPLAY 2		
2ND1	No output data; check circuit breaker.	R-ND-1 bus to the 2A and 2B IOC's is inactive at both units.
2ND2	Various circuits failed.	An internal ND fault is detected.
2ND3	IOC 1A input failed.	LA-IOC-1 bus from the 1A IOC to the six large displays is inactive at the ND input but active elsewhere.
2ND4	IOC 1B input failed.	LB-IOC-1 bus from the 1B IOC to the six large displays is inactive at the ND input but active elsewhere.
2ND5	IOC 2A input failed.	RA-IOC-1 bus from the 2A IOC to the six large displays is inactive at the ND input but active elsewhere.
2ND6	IOC 2B input failed.	RB-IOC-1 bus from the 2B IOC to the six large displays is inactive at the ND input but active elsewhere.
2ND7	AHC 2 input failed.	R-AHC-2 bus from the #2 AHC to the two right large displays is inactive at the ND input but active at the PFD input.
2ND8	AHC 1 input failed.	L-AHC-3 bus from the #1 AHC to the two right large displays is inactive at the ND input but active at the PFD input.
2ND9	RTA input failed.	WXT-1 bus from the RTA to the ND's and MFD is inactive at the #2 ND input but active elsewhere.
PFD DISPLAY 1		
1PFD1	No output data; check circuit breaker.	L-PFD-1 bus to the 1A and 1B IOC's is inactive at both units.
1PFD2	Various circuits failed.	An internal PFD fault is detected.
1PFD3	IOC 1A input failed.	LA-IOC-1 bus from the 1A IOC to the six large displays is inactive at the PFD input but active elsewhere.
1PFD4	IOC 1B input failed.	LB-IOC-1 bus from the 1B IOC to the six large displays is inactive at the PFD input but active elsewhere.
1PFD5	IOC 2A input failed.	RA-IOC-1 bus from the 2A IOC to the six large displays is inactive at the PFD input but active elsewhere.
1PFD6	IOC 2B input failed.	RB-IOC-1 bus from the 2B IOC to the six large displays is inactive at the PFD input but active elsewhere.
1PFD7	AHC 2 input failed.	R-AHC-3 bus from the #2 AHC to the two left large displays is inactive at the PFD input but active at the ND input.
1PFD8	AHC 1 input failed.	L-AHC-2 bus from the #1 AHC to the two left large displays is inactive at the PFD input but active at the ND input.

Table 5-3. Fault Code Explanations (Cont).

FAULT CODE	DESCRIPTION	REASON
PFD DISPLAY 2		
2PFD1	No output data; check circuit breaker.	R-PFD-1 bus to the 2A and 2B IOC's is inactive at both units.
2PFD2	Various circuits failed.	An internal PFD fault is detected.
2PFD3	IOC 1A input failed.	LA-IOC-1 bus from the 1A IOC to the six large displays is inactive at the PFD input but active elsewhere.
2PFD4	IOC 1B input failed.	LB-IOC-1 bus from the 1B IOC to the six large displays is inactive at the PFD input but active elsewhere.
2PFD5	IOC 2A input failed.	RA-IOC-1 bus from the 2A IOC to the six large displays is inactive at the PFD input but active elsewhere.
2PFD6	IOC 2B input failed.	RB-IOC-1 bus from the 2B IOC to the six large displays is inactive at the PFD input but active elsewhere.
2PFD7	AHC 2 input failed.	R-AHC-2 bus from the #2 AHC to the two right large displays is inactive at the PFD input but active at the ND input.
2PFD8	AHC 1 input failed.	L-AHC-3 bus from the #1 AHC to the two right large displays is inactive at the PFD input but active at the ND input.
RADIO ALTIMETER		
ALT2	Various circuits failed.	An internal ALT fault is detected.
RAD ALTMR ADPTR		
RAC1	No output data; check circuit breaker.	L-RAC-1 bus to the 1A and 1B IOC's is inactive at both units.
RAC2	Various circuits failed.	An internal RAC fault is detected.
RTU TUNE UNIT 1		
1RTU2	RTU 2 output failed.	L-RTU-2 bus to the left COM/NAV radios is inactive at the input of at least three radios.
1RTU3	RTU 1 output failed.	L-RTU-1 bus to the right COM/NAV radios is inactive at the input of at least three radios.
RTU TUNE UNIT 2		
2RTU2	RTU 2 output failed.	R-RTU-2 bus to the right COM/NAV radios is inactive at the input of at least three radios.
2RTU3	RTU 1 output failed.	R-RTU-1 bus to the left COM/NAV radios is inactive at the input of at least three radios.

Table 5-3. Fault Code Explanations (Cont).

FAULT CODE	DESCRIPTION	REASON
VHF COMM ANT 1		
1ANT2	Various circuits failed.	An internal VHF COM antenna fault is detected; reflected power is abnormal.
VHF COMM ANT 2		
2ANT2	Various circuits failed.	An internal VHF COM antenna fault is detected; reflected power is abnormal.
VHF COMM XCVR 1		
1VHF1	No output data; check circuit breaker.	L-VHF-1 bus to the 1A and 1B IOC's is inactive at both units.
1VHF2	Various circuits failed.	An internal VHF fault is detected.
1VHF3	RTU 1 input failed.	L-RTU-2 bus from the #1 RTU to the left COM/NAV radios is inactive at the #1 VHF input but active elsewhere.
1VHF4	RTU 2 input failed.	R-RTU-1 bus from the #2 RTU to the left COM/NAV radios is inactive at the #1 VHF input but active elsewhere.
VHF COMM XCVR 2		
2VHF1	No output data; check circuit breaker.	R-VHF-1 bus to the 2A and 2B IOC's is inactive at both units.
2VHF2	Various circuits failed.	An internal VHF fault is detected.
2VHF3	RTU 2 input failed.	R-RTU-2 bus from the #2 RTU to the right COM/NAV radios is inactive at the #2 VHF input but active elsewhere.
2VHF4	RTU 1 input failed.	L-RTU-1 bus from the #1 RTU to the right COM/NAV radios is inactive at the #2 VHF input but active elsewhere.
VLF RECEIVER 1		
1VLF1	No output data; check circuit breaker.	L-VLF-1 bus to the 1A and 1B IOC's is inactive at both units.
1VLF2	Various circuits failed.	An internal VLF fault is detected.
1VLF3	Battery failed.	Replace the CMA battery.

Table 5-3. Fault Code Explanations (Cont).

FAULT CODE	DESCRIPTION	REASON
VOR RECEIVER 1		
1VOR1	No output data; check circuit breaker.	L-VIR-1 bus to the 1A and 1B IOC's is inactive at both units.
1VOR2	Various circuits failed.	An internal VIR fault is detected.
1VOR3	RTU 1 input failed.	L-RTU-2 bus from the #1 RTU to the left COM/NAV radios is inactive at the #1 VIR input but active elsewhere.
1VOR4	RTU 2 input failed.	R-RTU-1 bus from the #2 RTU to the left COM/NAV radios is inactive at the #1 VIR input but active elsewhere.
VOR RECEIVER 2		
2VOR1	No output data; check circuit breaker.	R-VIR-1 bus to the 2A and 2B IOC's is inactive at both units.
2VOR2	Various circuits failed.	An internal VIR fault is detected.
2VOR3	RTU 2 input failed.	R-RTU-2 bus from the #2 RTU to the right COM/NAV radios is inactive at the #2 VIR input but active elsewhere.
2VOR4	RTU 1 input failed.	L-RTU-1 bus from the #1 RTU to the right COM/NAV radios is inactive at the #2 VIR input but active elsewhere.
WEATHER RADAR A (Not monitored if #1 ND diagnostics are lost)		
WXRA1	No output data; check circuit breaker.	No WXR diagnostic data is detected at the 1A or 1B IOC; channel A WXR data is applied to the IOC's on the L-ND-1 bus.
WXRA2	Various circuits failed.	An internal RTA (calibration) fault is detected.
WXRA3	Various circuits failed.	An internal RTA (antenna) fault is detected.
WXRA4	Various circuits failed.	An internal RTA (transceiver) fault is detected.
WEATHER RADAR B (Not monitored if #2 ND diagnostics are lost)		
WXRB1	No output data; check circuit breaker.	No WXR diagnostic data is detected at the 2A or 2B IOC; channel B WXR data is applied to the IOC's on the R-ND-1 bus.
WXRB2	Various circuits failed.	An internal RTA (calibration) fault is detected.
WXRB3	Various circuits failed.	An internal RTA (antenna) fault is detected.
WXRB4	Various circuits failed.	An internal RTA (transceiver) fault is detected.

Table 5-3. Fault Code Explanations (Cont).

FAULT CODE	DESCRIPTION	REASON
XPONDER ADPTR 1		
1CAD1	No output data; check circuit breaker.	L-CAD-1 bus to the 1A and 1B IOC's is inactive at both units.
1CAD2	Various circuits failed.	An internal CAD fault is detected.
1CAD3	RTU 1 input failed.	L-RTU-2 bus from the #1 RTU to the left COM/NAV radios is inactive at the #1 CAD input but active elsewhere.
1CAD4	RTU 2 input failed.	R-RTU-1 bus from the #2 RTU to the left COM/NAV radios is inactive at the #1 CAD input but active elsewhere.
XPONDER ADPTR 2		
2CAD1	No output data; check circuit breaker.	R-CAD-1 bus to the 2A and 2B IOC's is inactive at both units.
2CAD2	Various circuits failed.	An internal CAD fault is detected.
2CAD3	RTU 2 input failed.	R-RTU-2 bus from the #2 RTU to the right COM/NAV radios is inactive at the #2 CAD input but active elsewhere.
2CAD4	RTU 1 input failed.	L-RTU-1 bus from the #1 RTU to the right COM/NAV radios is inactive at the #2 CAD input but active elsewhere.

5.6.2 LRU Diagnostic Data

The LRU DIAGNOSTIC DATA page displays a list of the avionics units which provide diagnostic words to the FMS. Each LRU is displayed with its current operating status and a readout of the received diagnostic word. This dynamic display updates as new data is received.

This list is organized alphanumerically into nine pages which contain up to five LRU lines per page. The CHP joystick is used to scroll between the pages. Move the joystick down to display the next page; move the joystick up to display the previous page. Page numbers are displayed in the upper right of the screen.

Refer to figure 5-5. The LRU DIAGNOSTIC DATA page consists of the radar mode line (top line), the MFD mode line (bottom line), an LRU column, and a STATUS column. Diagnostic words are displayed below each LRU name.

The radar mode line annunciates the RTA mode and operating status. The MFD mode line labels the functions of active MFD line keys.

Press the IDX line key to display the index page.
Press the MNU line key to display the maintenance menu page.
Press the RCL line key to recall the previously used checklist.
Press the EMG line key to display the emergency checklist menu.

The LRU column lists the units that supply diagnostic words to the FMS. These units are listed in table 5-4. The diagnostic word received from each unit is displayed below the LRU name. Note that the STRAPPING OPTION line is a hexadecimal readout of the aircraft configuration strapping plug in the IAPS.

Refer to table 5-5 for a bit definition of each diagnostic word. Use this table to interpret the hexadecimal readouts and to determine present diagnostic conditions. Each sheet contains an example of a decoded word; the last sheet of the table provides instructions to interpret these codes.

The STATUS column indicates the current operating condition of each unit, similar to the AVIONICS STATUS page. This column is blank for each unit with a normal status condition. An OFF-CHK BREAKR condition means that no diagnostic word was received from that LRU; check that power is applied to the unit. An OVERHEAT condition means that an IAPS power supply module (PWR) is overheating. A FAILED condition means that the LRU is diagnosed as malfunctioned.

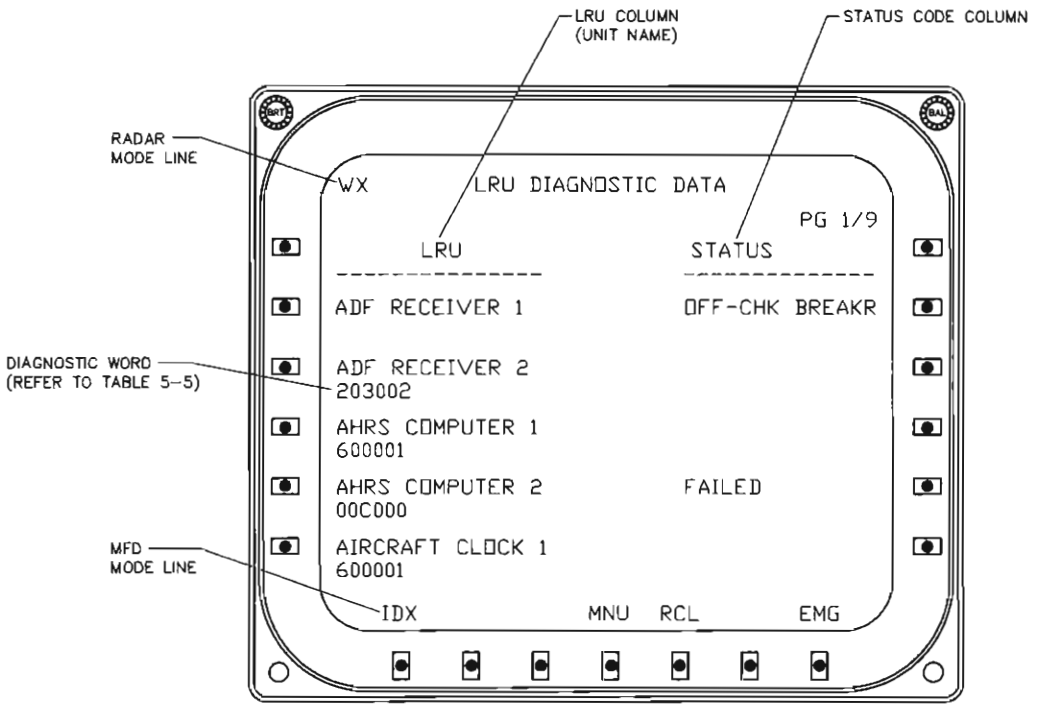

CGO-0355-08-AC-0

LRU Diagnostic Data Page
Figure 5-5

Table 5-4. LRU DIAGNOSTIC DATA Page, Reporting Units.

LRU	OCTAL LABEL OF DIAGNOSTIC WORD
ADF RECEIVER 1	350
ADF RECEIVER 2	350
AHRS COMPUTER 1	350
AHRS COMPUTER 2	350
AIRCRAFT CLOCK 1	352
AIRCRAFT CLOCK 2	352
AIR DATA CMPT 1	350
AIR DATA CMPT 2	350
DATA ACQ UNIT A	351
DATA ACQ UNIT B	351
DME 1	350
DME 2	350
EDC CONC 1 A	350
EDC CONC 1 B	350
EDC CONC 2 A	350
EDC CONC 2 B	350
EICAS DISPLAY	350
IAPS CDC CPLR 2B	CDC INTERNAL
IAPS FCC CMPT 1A	071 (from IOC)
IAPS FCC CMPT 2A	071 (from IOC)
IAPS FMC 851 1B	FMS INTERNAL
IAPS IOC CONC 1A	350
IAPS IOC CONC 1B	350
IAPS IOC CONC 2A	350
IAPS IOC CONC 2B	350
MFD DISPLAY	350
NAV DISPLAY 1	350
NAV DISPLAY 2	350
STRAPPING OPTION	352
PFD DISPLAY 1	350
PFD DISPLAY 2	350
RAD ALTMR ADPTR	350
VHF COMM XCVR 1	350
VHF COMM XCVR 2	350
VLF RECEIVER 1	274
VOR RECEIVER 1	350
VOR RECEIVER 2	350
WEATHER RADAR A	354 (from ND 1)
WEATHER RADAR B	354 (from ND 2)
XPONDER ADPTR 1	350
XPONDER ADPTR 2	350

ADDENDUM 2

TO

STARSHIP 1 AVIONICS SYSTEM

SYSTEM MANUAL

PART NUMBER 523-0774076, DATED 14 JAN 1989

Insert this addendum sheet facing page 5-39 of the Maintenance Section of the manual

The following table interprets a sample displayed diagnostic word.

SAMPLE 6-DIGIT HEXADECIMAL DISPLAY:		2	0	5	7	A	E
BINARY VALUE	BIT NUMBER						
1	9						0
2	10						1
4	11	E					1
8	12						1
1	13					0	
2	14					1	
4	15	A				0	
8	16					1	
1	17				1		
2	18				1		
4	19	7			1		
8	20				0		
1	21			1			
2	22			0			
4	23	5		1			
8	24			0			
1	25		0				
2	26		0				
4	27	0	0				
8	28		0				
1	29	0					
2	30	1					
4	31	2 0					
8	32	0					

These bits are set: 10-12,14, 16-19,21,23,30.

HEXADECIMAL TO BINARY CONVERSION TABLE

	HEXADECIMAL DIGIT															
BINARY VALUE:	0	1	2	3	4	5	6	7	8	9	A (10)	B (11)	C (12)	D (13)	E (14)	F (15)
1	0	1	0	1	0	1	0	1	0	1	0	1	0	1	0	1
2	0	0	1	1	0	0	1	1	0	0	1	1	0	0	1	1
4	0	0	0	0	1	1	1	1	0	0	0	0	1	1	1	1
8	0	0	0	0	0	0	0	0	1	1	1	1	1	1	1	1

Table 5-5. Diagnostic Word Explanations.

OCTAL 350 BIT NUMBER	DESCRIPTION

These words are displayed on the LRU DIAGNOSTIC DATA and LRU FAULT HISTORY pages.

ADF RECEIVER Diagnostic Word

9	*SDI code		BCD FAULT CODE (Bits 17-24)	
10	*SDI code			
11	0		00	No faults found
12	0		11	Failed input bus at port A
			12	No ADF frequency at port A
13	0		13	Invalid frequency at port A
14	0		14	Failed input bus at port B
15	0		15	No ADF frequency at port B
16	0		16	Invalid frequency at port B
			17	Not used
17	1	(BCD	18	Not used
18	2	fault code	19	Not used
19	4	units	20	No bearing update
20	8	digit)	21	Not used
			22	B+ failure
21	10	(BCD	23	B- failure
22	20	fault code	24	RAM failure, I/O processor
23	40	tens	25	A/D failure
24	80	digit)	26	Sin modulation failure
			27	Cos modulation failure
25	0		28	SMO lock failure
26	0		29	Antenna power failure
27	0		30	Low signal level, or no rcv station
28	0		31	Detector out-of-lock, or no rcv station
			32	AGC out-of-range, or no rcv station
29	0		33	Hf key line low, or no rcv station
30	**SSM code		34	Dc sin failure, or no rcv station
31	**SSM code		35	Dc cos failure, or no rcv station
32	Parity (odd)			

*SDI code:

Bit 10	Bit 9	LRU Number
0	0	Not used
0	1	1 (left)
1	0	2 (right)
1	1	Not used

**SSM code:

Bit 31	Bit 30	LRU Status
0	0	Failed
0	1	No computed data
1	0	Functional test
1	1	Normal

EXAMPLE: Diagnostic word = 203101

2	Bits 29-32	Bit 30 is set; SSM = No computed data
0	Bits 25-28	No bits are set
3	Bits 21-24	Bits 21 and 22 are set; fault code tens digit is 3
1	Bits 17-20	Bit 17 is set; fault code units digit is 1 (code is 31)
0	Bits 13-16	No bits are set
1	Bits 9-12	Bit 9 is set; SDI = ADF number 1

Table 5-5. Diagnostic Word Explanations (Cont).

OCTAL 350 BIT NUMBER	DESCRIPTION
AHRS COMPUTER Diagnostic Word	
9	*SDI code
10	*SDI code
11	Heading invalid
12	Attitude invalid
13	Rate compare invalid
14	Accel compare invalid
15	Checksum invalid
16	Align invalid
17	Flux detector invalid
18	I/O invalid
19	Hardware invalid
20	Wheel 1 failed
21	Wheel 2 failed
22	Initialization mode
23	High rate invalid
24	Box orientation invalid
25	RAM backup invalid (low battery)
26	Wraparound disabled
27	Compensation mode
28	DG mode (not slaved)
29	Failed ADC input bus
30	**SSM code
31	**SSM code
32	Parity (odd)

*SDI code:	Bit 10	Bit 9	LRU Number
	0	0	Not used
	0	1	1 (left)
	1	0	2 (right)
	1	1	3

**SSM code:	Bit 31	Bit 30	LRU Status
	0	0	Failed
	0	1	Not used
	1	0	STIM (test) mode
	1	1	Normal

EXAMPLE: Diagnostic word = 02200A

0	Bits 29-32	No bits are set; SSM = Failed
2	Bits 25-28	Bit 26 is set; wraparound is disabled
2	Bits 21-24	Bit 22 is set; initialization mode is in process
0	Bits 17-20	No bits are set
0	Bits 13-16	No bits are set
A	Bits 9-12	Bits 12 and 10 are set; attitude is invalid and SDI = AHC number 2

Table 5-5. Diagnostic Word Explanations (Cont).

OCTAL 352 BIT NUMBER	DESCRIPTION
AIRCRAFT CLOCK Diagnostic Word	
9	*SDI code
10	*SDI code
11	0
12	0
13	0
14	0
15	Internal power monitor
16	Crystal frequency monitor
17	0
18	0
19	0
20	0
21	0
22	0
23	0
24	0
25	0
26	0
27	0
28	0
29	0
30	**SSM code
31	**SSM code
32	Parity (odd)

*SDI code:	Bit 10	Bit 9	LRU Number
	0	0	Not used
	0	1	1 (left)
	1	0	2 (right)
	1	1	Not used

**SSM code:	Bit 31	Bit 30	LRU Status
	0	0	Failed
	0	1	No computed data
	1	0	Functional test
	1	1	Normal

EXAMPLE: Diagnostic word = 600001		
6	Bits 29-32	Bits 30 and 31 are set; SSM = Normal
0	Bits 25-28	No bits are set
0	Bits 21-24	No bits are set
0	Bits 17-20	No bits are set
0	Bits 13-16	No bits are set
1	Bits 9-12	Bit 9 is set; SDI = CLK number 1

Table 5-5. Diagnostic Word Explanations (Cont).

OCTAL 350 BIT NUMBER	DESCRIPTION
AIR DATA CMPT Diagnostic Word	
9	*SDI code
10	*SDI code
11	0
12	0
13	ALT computation invalid
14	IAS computation invalid
15	Failed ARINC input bus
16	FIFO failed
17	Failed ADC XTLK input bus
18	Failed ALI input bus
19	Analog I/O failed
20	Ps sensor failed
21	Qc sensor failed
22	ASI fault (0 if ALI bus is failed)
23	ALI fault (0 if ALI bus is failed)
24	ADC configuration invalid
25	ADM Ps failure
26	ADM Qc failure
27	Ps coefficient PROM failed
28	Qc coefficient PROM failed
29	0
30	**SSM code
31	**SSM code
32	Parity (odd)

*SDI code:

Bit 10	Bit 9	LRU Number
0	0	Not used
0	1	1 (left)
1	0	2 (right)
1	1	Not used

**SSM code:

Bit 31	Bit 30	LRU Status
0	0	Failed
0	1	Not used
1	0	Functional test
1	1	Normal

EXAMPLE: Diagnostic word = 004002

0	Bits 29-32	No bits are set; SSM = Failed
0	Bits 25-28	No bits are set
4	Bits 21-24	Bit 23 is set; an ALI fault is detected
0	Bits 17-20	No bits are set
0	Bits 13-16	No bits are set
2	Bits 9-12	Bit 10 is set; SDI = ADC number 2

Table 5-5. Diagnostic Word Explanations (Cont).

OCTAL 351 BIT NUMBER	DESCRIPTION
DATA ACQ UNIT Diagnostic Word	
9	0
10	0
11	0
12	0
13	DAU-1 output failed
14	Side ident failed
15	0
16	Failed CLK input bus
17	Failed RA-GP 1 input bus
18	Failed MFD-1 input bus
19	Failed LA-GP 1 input bus
20	Failed ECD-1 input bus
21	0
22	0
23	Failed R-EDC-1 (DAU A) or failed L-EDC-2 (DAU B) input bus
24	Failed L-EDC-1 (DAU A) or failed R-EDC-2 (DAU B) input bus
25	0
26	0
27	Discrete mux failed
28	Connector engage failed
29	0
30	**SSM code
31	**SSM code
32	Parity (odd)

**SSM code:

Bit 31	Bit 30	LRU Status
0	0	Failed
0	1	Not used
1	0	Not used
1	1	Normal

EXAMPLE: Diagnostic word = 000C00

0	Bits 29-32	No bits are set; SSM = Failed
0	Bits 25-28	No bits are set
0	Bits 21-24	No bits are set
C	Bits 17-20	Bits 19 and 20 are set; LA-GP 1 and ECD-1 buses failed
0	Bits 13-16	No bits are set
0	Bits 9-12	No bits are set

Table 5-5. Diagnostic Word Explanations (Cont).

OCTAL 350 BIT NUMBER	DESCRIPTION
DME Diagnostic Word	
9	*SDI code
10	*SDI code
11	0
12	Video processor fault
13	Receiver fault
14	Distance processor fault
15	Microprocessor ROM fault
16	Microprocessor RAM fault
17	1 (BCD
18	2 fault code
19	4 units
20	8 digit)
21	10 (BCD
22	20 fault code
23	40 tens
24	80 digit)
25	Power supply fault
26	Synthesizer fault
27	Transmitter fault
28	Failed input bus at port B
29	Failed input bus at port A
30	**SSM code
31	**SSM code
32	Parity (odd)

BCD FAULT CODE (Bits 17-24)

00	No faults found
01	Power supply failed
02	Synthesizer out-of-lock
03	Transmitter failed
04	Video processor failed (test)
05	Receiver processor failed (test)
06	Distance processor failed (test)
07	ROM failed
08	RAM failed
09	Failed input bus at port B
10	Failed input bus at port A

*SDI code:

Bit 10	Bit 9	LRU Number
0	0	Not used
0	1	1 (left)
1	0	2 (right)
1	1	Not used

**SSM code:

Bit 31	Bit 30	LRU Status
0	0	Failed
0	1	Not used
1	0	Functional test
1	1	Normal

EXAMPLE: Diagnostic word = 400621

4	Bits 29-32	Bit 31 is set; SSM = Functional test
0	Bits 25-28	No bits are set
0	Bits 21-24	No bits are set; fault code tens digit is 0
6	Bits 17-20	Bits 18 and 19 are set; fault code units digit is 6 (code is 6)
2	Bits 13-16	Bit 2 is set; a distance processor fault is detected
1	Bits 9-12	Bit 9 is set; SDI = DME number 1

Table 5-5. Diagnostic Word Explanations (Cont).

OCTAL 350 BIT NUMBER	DESCRIPTION
EDC CONC Diagnostic Word	
9	*SDI code
10	*SDI code
11	On-chip RAM test fail
12	ARINC xmtr test fail
13	Internal bus test fail
14	0
15	Discrete card test fail
16	Bad fuel flow compensation
17	Cold start reinit
18	Short term pwr interrupt
19	0
20	ROM integrity error
21	LSB (Hex
22	card read
23	fault
24	MSB code)
25	0
26	0
27	Invalid SDI or input connector failure
28	Power supply voltage out-of-tolerance
29	0
30	**SSM code
31	**SSM code
32	Parity (odd)

HEX CARD READ FAULT CODE (Bits 21-24)

0	Not used
1	Monitor (bit 21)
2	Not used
3	Discrete (bits 21 and 22)
4	Not used
5	Fuel flow (bits 21 and 23)
6	Torque (bits 22 and 23)
7	RPM (bits 21, 22, and 23)
8	ITT (bit 24)
9	Not used
A	Not used
B	Oil temp-press (bits 21, 22, and 24)
C	Not used
D	Not used
E	Not used
F	More than 1 card (bits 21 thru 24)

*SDI code:

Bit 10	Bit 9	LRU Number
0	0	Not used
0	1	1 (left)
1	0	2 (right)
1	1	Not used

**SSM code:

Bit 31	Bit 30	LRU Status
0	0	Failed
0	1	No computed data
1	0	Functional test
1	1	Normal

EXAMPLE: Diagnostic word = 00B801

0	Bits 29-32	No bits are set; SSM = Failed
0	Bits 25-28	No bits are set
B	Bits 21-24	Bits 21, 22, and 24 are set; oil temp-press card failed
8	Bits 17-20	Bit 20 is set; a ROM integrity error is detected
0	Bits 13-16	No bits are set
1	Bits 9-12	Bit 9 is set; SDI = EDC number 1

Table 5-5. Diagnostic Word Explanations (Cont).

OCTAL 350 BIT NUMBER	DESCRIPTION
EICAS DISPLAY Diagnostic Word	
9	Failed B-DAU-1 input bus
10	Failed A-DAU-1 input bus
11	0
12	0
13	Failed LB-IOC-1 input bus
14	Failed LA-IOC-1 input bus
15	Failed. RB-IOC-1 input bus
16	Failed RA-IOC-1 input bus
17	0
18	0
19	0
20	0
21	ARINC wraparound failed
22	High-voltage power supply failed
23	Low-voltage power supply failed
24	MEM failed
25	I/O processor failed
26	Display processor failed
27	Video amplifier failed
28	Deflection amplifier failed
29	Graphics generator failed
30	**SSM code
31	**SSM code
32	Parity (odd)

**SSM code:

Bit 31	Bit 30	LRU Status
0	0	Failed
0	1	No computed data
1	0	Functional test
1	1	Normal

EXAMPLE: Diagnostic word = 0000C0

0	Bits 29-32	No bits are set; SSM = Failed
0	Bits 25-28	No bits are set
0	Bits 21-24	No bits are set
0	Bits 17-20	No bits are set
C	Bits 13-16	Bits 15 and 16 are set; the RB and RA IOC-1 buses failed
0	Bits 9-12	No bits are set

Table 5-5. Diagnostic Word Explanations (Cont).

CDC INTERNAL WORD BIT NUMBER	DESCRIPTION
IAPS CDC CPLR 2B Diagnostic Word	
9	0
10	0
11	0
12	0
13	0
14	0
15	0
16	0
17	Number 2 CDU fault
18	Failed R-CDU-1 input bus
19	Failed LA-IOC-4 input bus
20	Failed LB-IOC-4 input bus
21	Failed RA-IOC-4 input bus
22	Failed RB-IOC-4 input bus
23	Failed L-FMS-4 input bus (xtlk)
24	Low battery (CDC battery A1)
25	0
26	0
27	Watchdog monitor inhibited
28	0
29	0
30	**SSM code
31	**SSM code
32	0

**SSM code:

Bit 31	Bit 30	LRU Status
0	0	Failed
0	1	No computed data
1	0	Functional test
1	1	Normal

EXAMPLE: Diagnostic word = 008200

0	Bits 29-32	No bits are set; SSM = Failed
0	Bits 25-28	No bits are set
8	Bits 21-24	Bit 24 is set; the CDC battery is low
2	Bits 17-20	Bit 18 is set; CDU input bus failed
0	Bits 13-16	No bits are set
0	Bits 9-12	No bits are set

Table 5-5. Diagnostic Word Explanations (Cont).

OCTAL 071 BIT NUMBER	DESCRIPTION
IAPS FCC CMPT Diagnostic Word	
9	*SDI code
10	*SDI code
11	0
12	0
13	0
14	FCC failed
15	0
16	0
17	0
18	Configuration strapping not compatible
19	0
20	0
21	0
22	Trim system failed
23	Failed XCHAN input bus
24	Failed A side IOC-3 input bus
25	Failed AHC-1 input bus
26	Failed MSP TO FCC input bus
27	Failed B side IOC-3 input bus
28	0
29	0
30	**SSM code
31	**SSM code
32	Parity (odd)

*SDI code:

Bit 10	Bit 9	LRU Number
0	0	Not used
0	1	1 (left)
1	0	2 (right)
1	1	Not used

**SSM code:

Bit 31	Bit 30	LRU Status
0	0	Failed FCC system
0	1	No computed data
1	0	Functional test
1	1	Normal

EXAMPLE: Diagnostic word = 002001

0	Bits 29-32	No bits are set; SSM = Failed
0	Bits 25-28	No bits are set
2	Bits 21-24	Bit 22 is set; a trim system fault is detected
0	Bits 17-20	No bits are set
0	Bits 13-16	No bits are set
1	Bits 9-12	Bit 9 is set; SDI = FCC number 1

Table 5-5. Diagnostic Word Explanations (Cont).

FMS INTERNAL WORD BIT NUMBER	DESCRIPTION
IAPS FMC 851 1B Diagnostic Word	
9	0
10	0
11	0
12	0
13	0
14	0
15	0
16	0
17	Number 1 CDU fault
18	Failed L-CDU-1 input bus
19	Failed LA-IOC-4 input bus
20	Failed LB-IOC-4 input bus
21	Failed RA-IOC-4 input bus
22	Failed RB-IOC-4 input bus
23	Failed R-FMS-4 input bus (xtlk)
24	Low battery (FMC-851A battery A1)
25	Low battery (FMC-851A battery A2)
26	Low battery (FMC-852A)
27	Watchdog monitor inhibited
28	FMC-852A not responding
29	0
30	**SSM code
31	**SSM code
32	0

**SSM code:

Bit 31	Bit 30	LRU Status
0	0	Failed
0	1	No computed data
1	0	Functional test
1	1	Normal

EXAMPLE: Diagnostic word = 020100

0	Bits 29-32	No bits are set; SSM = Failed
2	Bits 25-28	Bit 26 is set; the FMC-852A battery is low
0	Bits 21-24	No bits are set
1	Bits 17-20	Bit 17 is set; a number 1 CDU fault is detected
0	Bits 13-16	No bits are set
0	Bits 9-12	No bits are set

Table 5-5. Diagnostic Word Explanations (Cont).

OCTAL 350 BIT NUMBER	DESCRIPTION
IAPS IOC CONC Diagnostic Word	
9	0
10	0
11	Memory region 1 fail
12	Memory region 2 fail
13	Memory region 3 fail
14	Memory region 4 fail
15	Memory region 5 fail
16	UART/Mux data bus fail
17	Initialization mode
18	Mux or UART status word error
19	Mux wraparound test fail
20	Hardware prioritizer test fail
21	Heartbeat monitor test fail
22	Local straps test fail
23	IAPS system strapping plug test fail
24	CPU test fail
25	Test vector simulation
26	Input queue overrun error
27	Output queue overrun error
28	Local power supply overheat
29	Offside power supply overheat
30	**SSM code
31	**SSM code
32	Parity (odd)

**SSM code:

Bit 31	Bit 30	LRU Status
0	0	Failed
0	1	No computed data
1	0	Functional test
1	1	Normal

EXAMPLE: Diagnostic word = 000200

0	Bits 29-32	No bits are set; SSM = Failed
0	Bits 25-28	No bits are set
0	Bits 21-24	No bits are set
2	Bits 17-20	Bit 18 is set; mux or UART status word errors are detected
0	Bits 13-16	No bits are set
0	Bits 9-12	No bits are set

Table 5-5. Diagnostic Word Explanations (Cont).

OCTAL 350 BIT NUMBER	DESCRIPTION
MFD DISPLAY Diagnostic Word	
9	Failed B-DAU-1 input bus
10	Failed A-DAU-1 input bus
11	0
12	Failed L-FMS-2 input bus
13	Failed LB-IOC-1 input bus
14	Failed LA-IOC-1 input bus
15	Failed RB-IOC-1 input bus
16	Failed RA-IOC-1 input bus
17	0
18	0
19	0
20	Failed WXT-1 input bus
21	ARINC wraparound failed
22	High-voltage power supply failed
23	Low-voltage power supply failed
24	MEM failed
25	I/O processor failed
26	Display processor failed
27	Video amplifier failed
28	Deflection amplifier failed
29	Graphics generator failed
30	**SSM code
31	**SSM code
32	Parity (odd)

**SSM code:

Bit 31	Bit 30	LRU Status
0	0	Failed
0	1	No computed data
1	0	Functional test
1	1	Normal

EXAMPLE: Diagnostic word = 042000

0	Bits 29-32	No bits are set; SSM = Failed
4	Bits 25-28	Bit 27 is set; a video amplifier fault is detected
2	Bits 21-24	Bit 22 is set; a high-voltage power supply fault is detected
0	Bits 17-20	No bits are set
0	Bits 13-16	No bits are set
0	Bits 9-12	No bits are set

Table 5-5. Diagnostic Word Explanations (Cont).

OCTAL 350 BIT NUMBER	DESCRIPTION
NAV DISPLAY Diagnostic Word	
9	0
10	0
11	Failed R-AHC input bus
12	Failed L-AHC input bus
13	Failed LB-IOC-1 input bus
14	Failed LA-IOC-1 input bus
15	Failed RB-IOC-1 input bus
16	Failed RA-IOC-1 input bus
17	0
18	0
19	0
20	Failed WXT-1 input bus
21	ARINC wraparound failed
22	High-voltage power supply failed
23	Low-voltage power supply failed
24	MEM failed
25	I/O processor failed
26	Display processor failed
27	Video amplifier failed
28	Deflection amplifier failed
29	Graphics generator failed
30	**SSM code
31	**SSM code
32	Parity (odd)

**SSM code:

Bit 31	Bit 30	LRU Status
0	0	Failed
0	1	No computed data
1	0	Functional test
1	1	Normal

EXAMPLE: Diagnostic word = 0100F0

0	Bits 29-32	No bits are set; SSM = Failed
1	Bits 25-28	Bit 25 is set; an I/O processor fault is detected
0	Bits 21-24	No bits are set
0	Bits 17-20	No bits are set
F	Bits 13-16	Bits 13-16 are set; all 4 IOC-1 buses failed
0	Bits 9-12	No bits are set

Table 5-5. Diagnostic Word Explanations (Cont).

OCTAL 352 BIT NUMBER	DESCRIPTION
STRAPPING OPTION Diagnostic Word	
9	1 (LRN type code = VLF installed)
10	0 (LRN type code = VLF installed)
11	0 (LRN type code = VLF installed)
12	1 (dual PFD/ND's installed)
13	1 (dual DME's installed)
14	Dual ADF's installed (1 = dual, 0 = single)
15	1 (dual ADC's installed)
16	1 (spare)
17	0 (RA type code = ALT installed)
18	0 (RA type code = ALT installed)
19	0 (AHRS installed, 1 = INS)
20	0 (COM 3 not installed)
21	1 (FMS config code = single FMC, dual CDU)
22	0 (FMS config code = single FMC, dual CDU)
23	0 (RTA installed)
24	Word 1 parity (odd)
25	0
26	0
27	0
28	0
29	0
30	1
31	1
32	Parity (odd)

EXAMPLE: Diagnostic word = 6010F9		
6	Bits 29-32	Bits 30 and 31 are set
0	Bits 25-28	No bits are set
1	Bits 21-24	Bit 21 is set; 1 FMC and 2 CDU's are installed
0	Bits 17-20	No bits are set; ALT and AHRS are installed, COM 3 is not
F	Bits 13-16	Bits 13-16 are set; 2 DME's, 2 ADF's, and 2 ADC's are installed
9	Bits 9-12	Bits 9 and 12 are set; 1 VLF and 2 PFD/ND pairs are installed

Table 5-5. Diagnostic Word Explanations (Cont).

OCTAL 350 BIT NUMBER	DESCRIPTION
PFD DISPLAY Diagnostic Word	
9	0
10	0
11	Failed R-AHC input bus
12	Failed L-AHC input bus
13	Failed LB-IOC-1 input bus
14	Failed LA-IOC-1 input bus
15	Failed RB-IOC-1 input bus
16	Failed RA-IOC-1 input bus
17	0
18	0
19	0
20	0
21	ARINC wraparound failed
22	High-voltage power supply failed
23	Low-voltage power supply failed
24	MEM failed
25	I/O processor failed
26	Display processor failed
27	Video amplifier failed
28	Deflection amplifier failed
29	Graphics generator failed
30	**SSM code
31	**SSM code
32	Parity (odd)

**SSM code:

Bit 31	Bit 30	LRU Status
0	0	Failed
0	1	No computed data
1	0	Functional test
1	1	Normal

EXAMPLE: Diagnostic word = 600000

6	Bits 29-32	Bits 30 and 31 are set; SSM = Normal
0	Bits 25-28	No bits are set
0	Bits 21-24	No bits are set
0	Bits 17-20	No bits are set
0	Bits 13-16	No bits are set
0	Bits 9-12	No bits are set

Table 5-5. Diagnostic Word Explanations (Cont).

OCTAL 350 BIT NUMBER	DESCRIPTION
RAD ALTMR ADPTR Diagnostic Word	
9	*SDI code
10	*SDI code
11	Altimeter fail
12	RAM fail
13	ROM fail
14	0
15	0
16	0
17	1 (BCD
18	2 fault code
19	4 units
20	8 digit)
21	10 (BCD
22	20 fault code
23	40 tens
24	80 digit)
25	0
26	0
27	0
28	0
29	0
30	**SSM code
31	**SSM code
32	Parity (odd)

BCD FAULT CODE (Bits 17-24)

00	No faults found
01	Altimeter failed
02	RAM failed
03	Not used
04	ROM failed

*SDI code:

Bit 10	Bit 9	LRU Number
0	0	Not used
0	1	1 (left)
1	0	2 (right)
1	1	Not used

**SSM code:

Bit 31	Bit 30	LRU Status
0	0	Failed
0	1	Not used
1	0	Functional test
1	1	Normal

EXAMPLE: Diagnostic word = 000209

0	Bits 29-32	No bits are set; SSM = Failed
0	Bits 25-28	No bits are set
0	Bits 21-24	No bits are set; fault code tens digit is 0
2	Bits 17-20	Bit 18 is set; fault code units digit is 2 (code is 02)
0	Bits 13-16	No bits are set
9	Bits 9-12	Bits 9 and 12 are set; SDI = RAC number 1 and a RAM failure is detected

Table 5-5. Diagnostic Word Explanations (Cont).

OCTAL 350 BIT NUMBER	DESCRIPTION
VHF COMM XCVR Diagnostic Word	
9	*SDI code
10	*SDI code
11	0
12	0
13	0
14	0
15	0
16	0
17	1 (BCD
18	2 fault code
19	4 units
20	8 digit)
21	10 (BCD
22	20 fault code
23	40 tens
24	80 digit)
25	0
26	0
27	0
28	0
29	0
30	**SSM code
31	**SSM code
32	Parity (odd)

BCD FAULT CODE (Bits 17-24)

00	No faults found
01	5 V dc level low (test)
02	5 V dc level high (test)
03	12 V dc level low (test)
04	12 V dc level high (test)
05	Synthesizer out-of-lock
06	Not used
07	Squelch open w/o signal (test)
08	Squelch closed with signal (test)
09	Not used
10	Not used
11	No VHF frequency rcvd, or no rcv station
12	Invalid frequency rcvd, or no rcv station
13	Not used
14	Internal freq invalid, or no rcv station
15	Frequency out-of-range, or no rcv station
16	Forward power low
17	Transmitter temperature high
18	Not used
19	Not used
20	Not used
21	Tune volts fail at high freq (test)
22	Tune volts fail at low freq (test)
23	Oscillator output low (test)
24	No signal AGC level high (test)
25	AGC fail with signal (test)
26	Reflected power high
27	Transmitter time-out, or no rcv station
98	Failed input bus at port A
99	Failed input bus at port B

*SDI code:

Bit 10	Bit 9	LRU Number
0	0	Not used
0	1	1 (left)
1	0	2 (right)
1	1	3

**SSM code:

Bit 31	Bit 30	LRU Status
0	0	Failed
0	1	No computed data
1	0	Functional test
1	1	Normal

EXAMPLE: Diagnostic word = 402502

4	Bits 29-32	Bit 31 is set; SSM = Functional test
0	Bits 25-28	No bits are set
2	Bits 21-24	Bit 22 is set; fault code tens digit is 2
5	Bits 17-20	Bits 17 and 19 are set; fault code units digit is 5 (code is 25)
0	Bits 13-16	No bits are set
2	Bits 9-12	Bit 10 is set; SDI = VHF number 2

Table 5-5. Diagnostic Word Explanations (Cont).

OCTAL 274 BIT NUMBER	DESCRIPTION
VLF RECEIVER 1 Diagnostic Word	
9	*SDI code
10	*SDI code
11	0
12	0
13	0
14	0
15	0
16	0
17	No clock input words
18	No air data input words
19	No AHRS input words
20	No data on input bus 2 (RB-GP BUS 2)
21	No data on input bus 1 (LB-GP BUS 2)
22	No data on input bus 3 (high speed)
23	Low battery on CMA
24	429 wraparound 2 fail
25	429 wraparound 1 fail
26	Antenna fail
27	Processor fail
28	Receiver fail
29	Oscillator fail
30	**SSM code
31	**SSM code
32	Parity (odd)

*SDI code:	Bit 10	Bit 9	LRU Number
	0	0	Not used
	0	1	1 (left)
	1	0	2 (right)
	1	1	Not used

**SSM code:	Bit 31	Bit 30	LRU Status
	0	0	Failed
	0	1	Not used
	1	0	Not used
	1	1	Normal

EXAMPLE: Diagnostic word = 040001

0	Bits 29-32	No bits are set; SSM = Failed
4	Bits 25-28	Bit 27 is set; a processor failure was detected in self-test
0	Bits 21-24	No bits are set
0	Bits 17-20	No bits are set
0	Bits 13-16	No bits are set
1	Bits 9-12	Bit 9 is set; SDI = CMA number 1

Table 5-5. Diagnostic Word Explanations (Cont).

OCTAL 350 BIT NUMBER	DESCRIPTION
VOR RECEIVER Diagnostic Word	

9	*SDI code	
10	*SDI code	
11	0	
12	0	
13	0	
14	0	
15	0	
16	0	
17	1	(BCD
18	2	fault code
19	4	units
20	8	digit)
21	10	(BCD
22	20	fault code
23	40	tens
24	80	digit)
25	VOR fault	
26	LOC fault	
27	GS fault	
28	Frequency fault	
29	Radio fault	
30	**SSM code	
31	**SSM code	
32	Parity (odd)	

BCD FAULT CODE (Bits 17-24)

00	No faults found
01	Not used
02	RAM fail
03	Not used
04	Not used
05	Invalid NAV frequency
06	ILS mode not same as delayed ILS line
07	Not used
08	Not used
09	Processor port 1 I/O bus fail
10	Processor port 2 I/O bus fail
11	A/D busy
12	A/D failed reference test
13	+13 V dc level failed test
14	-13 V dc level failed test
15	Not used
16	Not used
17	VOR synthesizer out-of-lock
18	AFC not locked, or no rcv station
19	No 30-Hz ref signal, or no rcv station
20	No 30-Hz var signal, or no rcv station
25	LOC synthesizer out-of-lock
26	LOC signal level low, or no rcv station
28	GS synthesizer out-of-lock
29	GS signal level low, or no rcv station
30	Marker beacon receiver failed
40	No data at input port A
41	No frequency at input port A
42	No data at input port B
43	No frequency at input port B
44	No internal frequency at processor

*SDI code:

Bit 10	Bit 9	LRU Number
0	0	Not used
0	1	1 (left)
1	0	2 (right)
1	1	Not used

**SSM code:

Bit 31	Bit 30	LRU Status
0	0	Failed
0	1	No computed data
1	0	Functional test
1	1	Normal

EXAMPLE: Diagnostic word = 201802

2	Bits 29-32	Bit 30 is set; SSM = No computed data
0	Bits 25-28	No bits are set
1	Bits 21-24	Bit 21 is set; fault code tens digit is 1
8	Bits 17-20	Bit 20 is set; fault code units digit is 8 (code is 18)
0	Bits 13-16	No bits are set
2	Bits 9-12	Bit 10 is set; SDI = VIR number 2

Table 5-5. Diagnostic Word Explanations (Cont).

OCTAL 354 BIT NUMBER	DESCRIPTION
WEATHER RADAR Diagnostic Word	
9	*SDI code (of sending ND)
10	*SDI code (of sending ND)
11	Slaved (CHANNEL SYNC)
12	Autotilt on
13	0
14	Turb alert on
15	Weather alert on
16	Anticlutter on
17	Sector scan reduced
18	Stab limits reached
19	Degraded variance processing
20	Failed input control bus
21	Calibration fault (T-R)
22	Attitude input fault
23	Control fault
24	Antenna fault
25	Transmitter/receiver fault
26	Stabilization on
27	Mode code
28	Mode code
29	Mode code
30	1
31	1
32	Parity (odd)

MODE CODE (Bits 27-29)

29	28	27	MODE
0	0	0	STBY
0	0	1	WX
0	1	0	GND MAP
0	1	1	Contour
1	0	0	Test
1	0	1	TURB ONLY
1	1	0	WX + TURB
1	1	1	Target

*SDI code:

Bit 10	Bit 9	LRU Number
0	0	Not used
0	1	1 (left)
1	0	2 (right)
1	1	Not used

EXAMPLE: Diagnostic word = 62C021

6	Bits 29-32	Bits 30 and 31 are set
2	Bits 25-28	Bit 26 is set; stabilization is on
C	Bits 21-24	Bits 23 and 24 are set; control and antenna faults are detected
0	Bits 17-20	No bits are set
2	Bits 13-16	Bit 14 is set; turbulence alert is on
1	Bits 9-12	Bit 9 is set; the SDI of the sending ND is 1 (RTA channel A)

Table 5-5. Diagnostic Word Explanations (Cont).

OCTAL 350 BIT NUMBER	DESCRIPTION
XPONDER ADPTR Diagnostic Word	
9	*SDI code
10	*SDI code
11	No xponder reply (test)
12	RAM fail (CAD)
13	ROM fail (CAD)
14	Failed input bus at port B
15	Failed input bus at port A
16	0
17	1 (BCD
18	2 fault code
19	4 units
20	8 digit)
21	10 (BCD
22	20 fault code
23	40 tens
24	80 digit)
25	0
26	0
27	0
28	0
29	0
30	**SSM code
31	**SSM code
32	Parity (odd)

BCD FAULT CODE (Bits 17-24)

00	No faults found
01	No xponder reply (test)
02	CAD RAM failed
03	Not used
04	CAD ROM failed
05	Not used
06	Not used
07	Not used
08	Failed input bus at port B
09	Not used
10	Failed input bus at port A

Ignore bit 11 and fault code 01 unless self-test is selected.

*SDI code:

Bit 10	Bit 9	LRU Number
0	0	Not used
0	1	1 (left)
1	0	2 (right)
1	1	Not used

**SSM code:

Bit 31	Bit 30	LRU Status
0	0	Failed
0	1	Not used
1	0	Functional test
1	1	Normal

EXAMPLE: Diagnostic word = 600105

6	Bits 29-32	Bits 30 and 31 are set; SSM = Normal
0	Bits 25-28	No bits are set
0	Bits 21-24	No bits are set; fault code tens digit is 0
1	Bits 17-20	Bit 17 is set; fault code units digit is 1 (code is 01)
0	Bits 13-16	No bits are set
5	Bits 9-12	Bits 9 and 11 are set; SDI = CAD number 1 and transponder is not currently sending a reply (may be normal since test is off)

Table 5-5. Diagnostic Word Explanations (Cont).

DIAGNOSTIC WORD INTERPRETATION

6-DIGIT HEXADECIMAL READOUT	2	0	5	7	A	E (EXAMPLE)
	:	:	:	:	:	:
CORRESPONDING DATA BITS	:	:	:	:	:	:
LSB BINARY 1	29	25	21	17	13	9
BINARY 2	30	26	22	18	14	10
BINARY 4	31	27	23	19	15	11
MSB BINARY 8	32	28	24	20	16	12

HEX TO BINARY CODE CONVERSION TABLE

	HEXADECIMAL DIGIT															
BINARY CODE:	0	1	2	3	4	5	6	7	8	9	A	B	C	D	E	F
LSB BINARY 1	0	1	0	1	0	1	0	1	0	1	0	1	0	1	0	1
BINARY 2	0	0	1	1	0	0	1	1	0	0	1	1	0	0	1	1
BINARY 4	0	0	0	0	1	1	1	1	0	0	0	0	1	1	1	1
MSB BINARY 8	0	0	0	0	0	0	0	0	1	1	1	1	1	1	1	1

EXAMPLE:	2	0	5	7	A	E
BIT NUMBER	|	|	|	|	|	|
9						0
10	|	|	|	|	|	1
11						1
12	|	|	|	|	|	1
13	|	|	|	|	0	
14					1	
15	|	|	|	|	0	
16					1	
	|	|	|	|		
17				1		
18	|	|	|	1		
19				1		
20	|	|	|	0		
21	|	|	1			
22			0			
23	|	|	1			
24			0			
	|	|				
25		0				
26	|	0				
27		0				
28	|	0				
29	0					
30	1					
31	0					
32	0					

The following bits are set: 10, 11, 12, 14, 16, 17, 18, 19, 21, 23, and 30.

5.6.3 LRU Fault History

The LRU FAULT HISTORY page displays fault logs of past flights. Each log contains stored fault information for one flight. This fault information includes the name of every LRU that failed during the flight and the corresponding time of failure, fault codes, and fault counter value. "NO FAULTS" annunciates if no fault logs are stored.

Fault history is organized into numbered logs, each representing one flight. A log is created when a fault is diagnosed while the aircraft is airborne; a log is not created if no faults occur during the flight. When the aircraft lands, the open current log is either canceled (no faults diagnosed in flight) or closed (a fault was diagnosed). If a new log is created, it becomes fault log 1; already existing logs are renumbered.

A maximum of 40 faults may be stored in the nonvolatile FMS memory. Between 1 (if 40 faults are stored in log 1) and 40 (if 1 fault per log is stored) logs may be stored, however no partial logs are stored. If a new log increases the total number of faults or logs to more than 40, the oldest log is completely erased to free enough memory for the new log.

Each fault log is organized into pages which contain up to five LRU entries per page. The CHP joystick is used to scroll between the pages and between logs. Move the joystick down to display the next page; move the joystick up to display the previous page. Page numbers are displayed in the upper right of the screen. Move the joystick right to display page 1 of the next higher-numbered fault log; move the joystick left to display page 1 of the next lower-numbered log.

Refer to figure 5-6. The LRU FAULT HISTORY page consists of the radar mode line (top line), the MFD mode line (bottom line), a FAULTS FOUND column, a TIME of fault column, a fault CODE column, and a fault counter (COUNTR) column. The top of each page lists the fault log number and the time/date the aircraft became airborne.

The radar mode line annunciates the RTA mode and operating status. The MFD mode line labels the functions of active MFD line keys.

Press the IDX line key to display the index page.
Press the MNU line key to display the maintenance menu page.
Press the RCL line key to recall the previously used checklist.
Press the EMG line key to display the emergency checklist menu.

The FAULTS FOUND column lists the name of each LRU diagnosed as failed during the flight. The list is in chronological order; the first detected fault is listed at the top of page 1.

The TIME of fault column lists the zulu time that the first fault for that LRU was diagnosed. The fault CODE column lists the internal fault code and the diagnostic word (if applicable) received from the failed LRU when its first fault occurred. Refer to tables 5-3 and 5-5 to interpret these codes. The fault counter (COUNTR) column lists the number of times the LRU failed. The fault counter increments each time the LRU is diagnosed as failed after being diagnosed as healthy.

The LRU fault history logs may be down-loaded to diskette using the DBU.

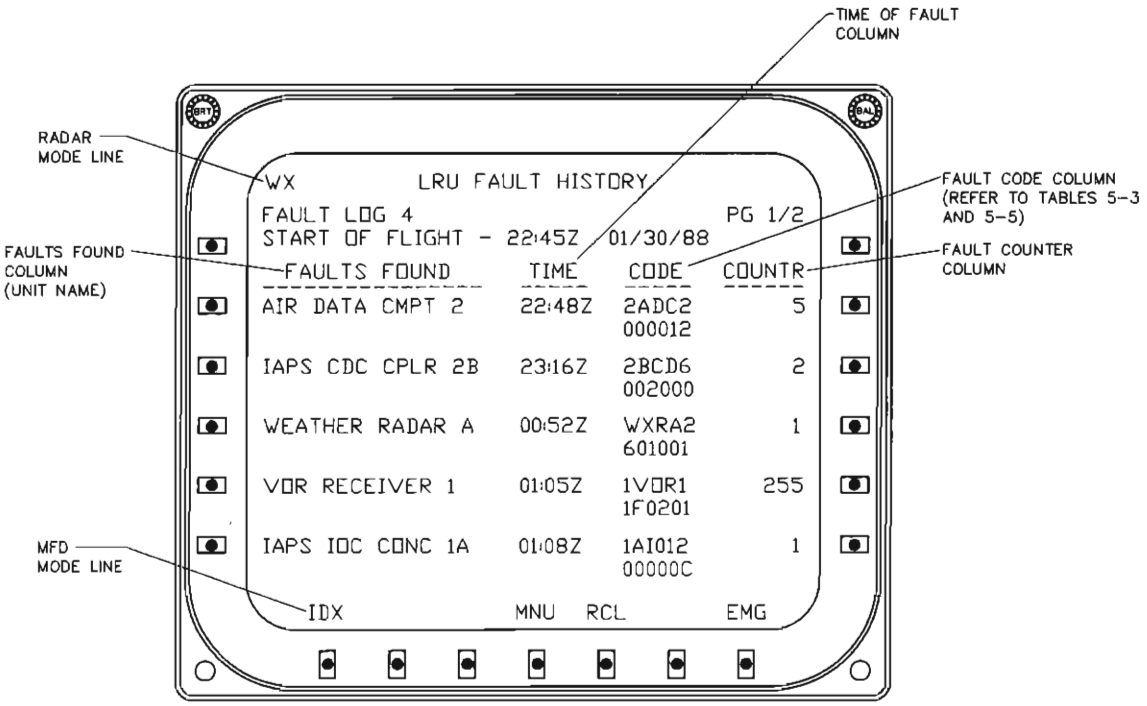

CGO-0355-08-AC-0

LRU Fault History Page
Figure 5-6

5.6.4 Engine Exceedance Data

The ENGINE EXCEEDANCE DATA page displays a list of engine exceedances that occurred during past flights. This list includes the type of exceedance and corresponding peak value, length, and date/time information. This data is supplied from EICAS. Questionable data is displayed in yellow. "NO EXCEEDANCES" annunciates if no exceedances are stored.

A maximum of 40 exceedances may be stored in non-volatile memory. When the 41st exceedance occurs, the oldest exceedance is erased from memory.

This list is organized into pages which contain up to five entries per page. The CHP joystick is used to scroll between the pages. Move the joystick down to display the next page; move the joystick up to display the previous page. Page numbers are displayed in the upper right of the screen.

Refer to figure 5-7. The ENGINE EXCEEDANCE DATA page consists of the radar mode line (top line), the MFD mode line (bottom line), an exceedance PARAM/PEAK VALUE column, a length of exceedance (T1/T2) column, a DAY/TIME of exceedance column, ERASE line keys, and a DISPLAY RESTORE line key.

The radar mode line annunciates the RTA mode and operating status. The MFD mode line labels the functions of active MFD line keys.

Press the IDX line key to display the index page.
Press the MNU line key to display the maintenance menu page.
Press the RCL line key to recall the previously used checklist.
Press the EMG line key to display the emergency checklist menu.

The exceedance PARAM/PEAK VALUE column lists the type of each exceedance and the maximum value that was reached during the exceedance. The five types of exceedances are torque, prop rpm, N1, ITT (run), and ITT (start). The list is in chronological order, the most recent occurrence is listed first.

The length of exceedance (T1/T2) column lists the time (in seconds) that the parameter was beyond a low-exceed threshold (T1) and a high-exceed threshold (T2) value. The official T1 and T2 threshold values are defined by Beech. The DAY/TIME column lists the date and zulu time that the exceedance ended.

The ERASE line keys are located on the right edge of the MFD. Press the line key next to an exceedance entry to erase that entry from display. The exceedance remains stored in memory but is no longer displayed on the MFD. Press the DISPLAY RESTORE line key to display all stored exceedance entries including those deleted by the ERASE line keys.

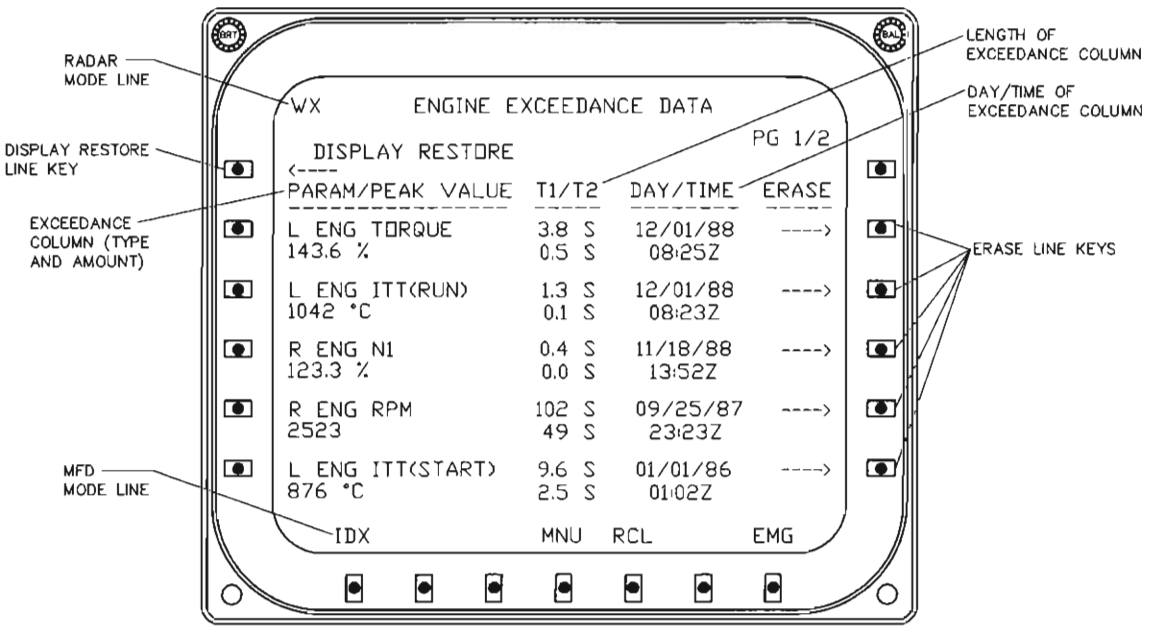

CGO-0355-08-AC-0

Engine Exceedance Data Page
Figure 5-7

5.6.5 FCS Diagnostics (Rev W)

The FCS diagnostics provide a means to isolate faults within the flight control system. Use these diagnostics if an autopilot problem exists which cannot be isolated after viewing the avionics status page. Note that the FCS diagnostics are controlled by the FCC flight control computers and not by the FMS computer.

FCS diagnostics consist of three basic modes. The input mode displays selected inputs to the FCC computers. The report mode displays selected internal FCC monitor information. The output mode displays and controls selected FCC outputs.

ENTER FCS DIAGNOSTICS:

- Press the IDX line key to display the index page on the MFD.
- Press the MAINTENANCE line key to display the maintenance menu page.
- Press the FCS DIAGNOSTICS line key to display instructions on how to enter diagnostics:
  1. Disengage the autopilot.
  2. Simultaneously press any three active MSP mode select buttons and hold for a few seconds. The report mode diagnostic page is then displayed on the MFD.

EXIT FCS DIAGNOSTICS:

- Press EXIT line key (or simultaneously press three active MSP mode select buttons) to exit diagnostics.
- Press the IDX line key to display the MFD index page.

Either the left, right, or both FCC computers may be put into diagnostic mode. Use the left MSP to put the left FCC into diagnostic mode; TEST annunciates on the left PFD. Use the right MSP to put the right FCC into diagnostic mode; TEST annunciates on the right PFD. When both FCC's are put into diagnostic mode, press the AP XFR button on the APP to select which FCC provides diagnostic display data to the MFD. A blue arrow on the diagnostic page indicates the (left or right) FCC that is driving the display.

The FCS diagnostics are not stored in nonvolatile memory. The FCC computers begin recording data at power up and retain this data only as long as power remains on. When the aircraft is powered down, all accumulated data is lost. When investigating a problem, be sure to write down any nonzero REPAIR, AP DIS, AP ENG, YD DIS, YD ENG, and STEER codes prior to power shutdown. Record all six digits of the code.

5.6.5.1 Report Mode

The report mode provides a report on the internal flight control system monitoring activity performed by the FCC computers. The report mode diagnostic page displays five lines of report parameters. Each line contains a parameter name, a LEFT diagnostic code, and a RIGHT diagnostic code. Line keys select report mode operations. Refer to figure 5-8.

The name column lists five report mode parameters. The LEFT FCC code column displays the hexadecimal code received from the number 1 FCC computer. The RIGHT FCC code column displays the hexadecimal code received from the number 2 FCC computer. Table 5-6 is a complete list of report mode parameters available for display. Parameter names that denote errors indicate the total number of errors which have occurred since power up. The six most useful report mode parameters are described below:

a. The REPAIR CODE summarizes all errors detected by the FCC monitors. This code collects data on all events which occur from power up to power down. If the REPAIR CODE is nonzero, refer to table 5-7 and interpret the displayed code. If the code is 000000, no faults have occurred.
b. The AP DIS CODE explains why the autopilot disengaged itself. If the AP DIS CODE is nonzero, refer to table 5-8 and interpret the code. This code latches to identify the cause of the last disengage.
c. The AP ENG CODE explains why the autopilot will not engage. If the AP ENG CODE is nonzero, refer to table 5-9 and interpret the code. This code names all conditions which are currently preventing the AP engage.
d. The YD DIS CODE explains why the yaw damper disengaged itself. If the YD DIS CODE is nonzero, refer to table 5-10 and interpret the code. This code latches to identify the cause of the last disengage.
e. The YD ENG CODE explains why the yaw damper will not engage. If the YD ENG CODE is nonzero, refer to table 5-11 and interpret the code. This code names all conditions which are currently preventing the YD engage.
f. The STEER CODE explains why flight director fail (FD) is annunciated on the PFD. If the STEER CODE is nonzero, refer to table 5-12 and interpret the code. This code names all conditions which are currently causing the flight director to fail.

Examples are included with tables 5-7 through 5-12 to help interpret these codes. Table 5-13 describes terms used in these tables and lists the LRU most likely to cause that code.

Press the CLEAR line key to clear (reset) each left- and right-side code. The CLEAR line key label is displayed when at least one code is nonzero. An alternate way to clear these codes is to rotate the APP turn knob left and then back to detent to clear the left-side codes. Rotate the APP turn knob right and then back to detent to clear the right-side codes. The codes clear when the knob returns to detent.

The cursor is always displayed at the left edge of the name column. The cursor indicates which parameter line is active. Normally the cursor is yellow, the AP XFR annunciator flashes, and the APP knobs can be used as an alternate way to select parameters. If the cursor is green and the AP XFR annunciator is on steady, then APP knob operation is disabled. Press the AP XFR button to select normal operation.

Press the MOVE CURSOR line key to move the cursor to the next line. An alternate way to move the cursor is to press one active MSP mode button.

Press the PREV or NEXT ITEM SCROLL line key to change the parameter displayed on the cursored line to the previous or next item in the report mode parameter list. Parameters are listed in table 5-6 and are scrolled in alphanumeric order. An alternate way to scroll display parameters is to rotate the APP pitch wheel.

Press and hold the LEFT SUMMARY line key to display a short "plain English" explanation of the code displayed in the LEFT column of the cursored line. This is a dynamic display and updates as the code changes. The lines of explanation are displayed in order of priority (top line is highest priority). If more than one problem exists, solve the highest priority problem first; related problems may also disappear. An alternate way to select this summary page is to rotate the APP turn knob left from detent; note that left side codes are cleared when the knob is returned to detent.

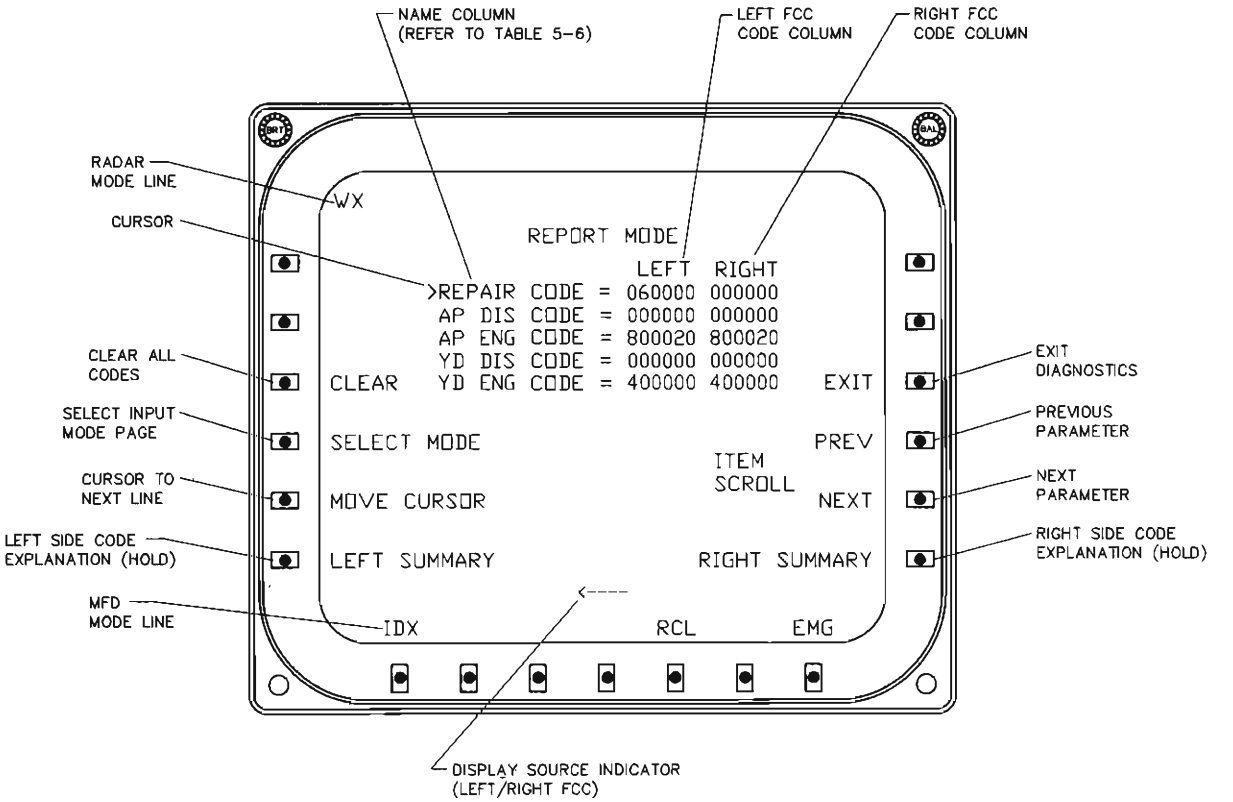

Report Mode Diagnostic Page
Figure 5-8

Press and hold the RIGHT SUMMARY line key to display an explanation of the code displayed in the RIGHT column of the cursored line. Operation is as described above. Rotate the APP turn knob right from detent to alternately select this summary page.

Press the SELECT MODE line key to cycle the MFD display to the next FCS diagnostic mode. When this key is pressed in report mode, the MFD displays the input mode diagnostic page. An alternate way to cycle modes is to simultaneously press any two active MSP mode buttons.

Press the EXIT line key to exit the FCS diagnostics. An alternate way to exit diagnostics is to simultaneously press any three active MSP mode buttons. Then press the IDX line key to display the MFD index page.

The radar mode line annunciates the RTA mode and operating status. The MFD mode line labels the functions of active MFD line keys.

Press the IDX line key to display the index page.
Press the RCL line key to recall the previously used checklist.
Press the EMG line key to display the emergency checklist menu.

The display source indicator is an arrow which points left or right to indicate which FCC is providing display data to the MFD.

Table 5-6. Report Mode Parameter List.

NAME		DESCRIPTION
AHRS	BUSERR	Number of attitude heading computer AHC-1 bus errors
AMP-P	ERRORS	Number of pitch servo amplifier errors
AMP-R	ERRORS	Number of roll servo amplifier errors
AMP-Y	ERRORS	Number of yaw servo amplifier errors
*AP DIS	CODE =	Cause of abnormal AP disengage (see table 5-8)
*AP ENG	CODE =	Reason AP will not engage (see table 5-9)
AP MON	ERRORS	Number of AP monitor hardware errors
CROSS	BUSERR	Number of cross-channel (XCHAN) bus errors
CUT-P	HARDW	Number of pitch cutout hardware errors
CUT-P	OCCUR	Number of pitch cutout occurrences (while engaged)
CUT-R	HARDW	Number of roll cutout hardware errors
CUT-R	OCCUR	Number of roll cutout occurrences (while engaged)
CUT-Y	HARDW	Number of yaw cutout hardware errors
CUT-Y	OCCUR	Number of yaw cutout occurrences (while engaged)
DMA	ERRORS	Number of main processor DMA RAM errors
EQZN-P	ERRORS	Number of pitch equalization errors
EQZN-R	ERRORS	Number of roll equalization errors
EQZN-Y	ERRORS	Number of yaw equalization errors
ID	NUMBER	Software identification number
IO	RESETS	Number of automatic resets of I/O processor
IOC-A	BUSERR	Number of A-IOC-3 bus errors
IOC-B	BUSERR	Number of B-IOC-3 bus errors
IO DMA	ERRORS	Number of I/O processor DMA RAM errors
IO RAM	ERRORS	Number of I/O processor RAM errors
IO ROM	ERRORS	Number of I/O processor ROM errors
MAIN	RESETS	Number of automatic resets of main processor
MATH	ERRORS	Number of main processor computation errors
PANEL	BUSERR	Number of panel (MSP TO FCC) bus errors
RAM	ERRORS	Number of main processor RAM errors
*REPAIR	CODE =	Diagnostic summary (see table 5-7)
ROM	ERRORS	Number of main processor ROM errors
STEER	CODE =	Cause of FD flag (see table 5-12)
TRIM-P	ERRORS	Number of trim system errors, pitch
WRAP-C	ERRORS	Number of wraparound errors, cross-channel
WRAP-P	ERRORS	Number of wraparound errors, pitch
WRAP-R	ERRORS	Number of wraparound errors, roll
WRAP-Y	ERRORS	Number of wraparound errors, yaw
*YD DIS	CODE =	Cause of abnormal YD disengage (see table 5-10)
*YD ENG	CODE =	Reason YD will not engage (see table 5-11)
YD MON	ERRORS	Number of YD monitor hardware errors

*These items are initially displayed.

Table 5-7. REPAIR Codes (Diagnostic Summary).

CODE VALUE	DIGIT 1 PROBLEM	DIGIT 2 PROBLEM	DIGIT 3 PROBLEM	DIGIT 4 PROBLEM	DIGIT 5 PROBLEM	DIGIT 6 PROBLEM
0	-	-	-	-	-	-
1	CUT-YO	IO ROM	CROSS	WRP-AP	RAM	IO CPU
2	TRIM	CUT-YH	IOC-AB	WRP-YD	CPU	DMA
3	CUT-YO TRIM	IO ROM CUT-YH	CROSS IOC-AB	WRP-AP WRP-YD	RAM CPU	IO CPU DMA
4	SVO-AP	CUT-AH	IO RAM	AHRS	ROM	EQU-YD
5	CUT-YO SVO-AP	IO ROM CUT-AH	CROSS IO RAM	WRP-AP AHRS	RAM ROM	IO CPU EQU-YD
6	TRIM SVO-AP	CUT-YH CUT-AH	IOC-AB IO RAM	WRP-YD AHRS	CPU ROM	DMA EQU-YD
7	CUT-YO TRIM SVO-AP	IO ROM CUT-YH CUT-AH	CROSS IOC-AB IO RAM	WRP-AP WRP-YD AHRS	RAM CPU ROM	IO CPU DMA EQU-YD
8	SVO-YD	CUT-AO	-	MONHDW	EQU-AP	PANEL
9	CUT-YO SVO-YD	IO ROM CUT-AO	CROSS -	WRP-AP MONHDW	RAM EQU-AP	IO CPU PANEL
A	TRIM SVO-YD	CUT-YH CUT-AO	IOC-AB -	WRP-YD MONHDW	CPU EQU-AP	DMA PANEL
B	CUT-YO TRIM SVO-YD	IO ROM CUT-YH CUT-AO	CROSS IOC-AB -	WRP-AP WRP-YD MONHDW	RAM CPU EQU-AP	IO CPU DMA PANEL
C	SVO-AP SVO-YD	CUT-AH CUT-AO	IO RAM -	AHRS MONHDW	ROM EQU-AP	EQU-YD PANEL
D	CUT-YO SVO-AP SVO-YD	IO ROM CUT-AH CUT-AO	CROSS IO RAM -	WRP-AP AHRS MONHDW	RAM ROM EQU-AP	IO CPU EQU-YD PANEL
E	TRIM SVO-AP SVO-YD	CUT-YH CUT-AH CUT-AO	IOC-AB IO RAM -	WRP-YD AHRS MONHDW	CPU ROM EQU-AP	DMA EQU-YD PANEL
F	CUT-YO TRIM SVO-AP SVO-YD	IO ROM CUT-YH CUT-AH CUT-AO	CROSS IOC-AB IO RAM -	WRP-AP WRP-YD AHRS MONHDW	RAM CPU ROM EQU-AP	IO CPU DMA EQU-YD PANEL

Refer to table 5-13 for description of codes and suspect LRU.

EXAMPLE: 002C00 means IOC-AB, AHRS, and MONHDW faults.

Table 5-8. AP DIS Codes (Latched Cause of AP Disengage).

CODE VALUE	DIGIT 1 PROBLEM	DIGIT 2 PROBLEM	DIGIT 3 PROBLEM	DIGIT 4 PROBLEM	DIGIT 5 PROBLEM	DIGIT 6 PROBLEM
0	-	-	-	-	-	-
1	-	IO ROM	CROSS	WRP-AP	RAM	ATTMON
2	RATMON	-	IOC	-	-	DMA
3	- RATMON	IO ROM -	CROSS IOC	WRP-AP -	RAM -	ATTMON DMA
4	SVO-P	EQU-P	IO RAM	AHRS	ROM	-
5	- SVO-P	IO ROM EQU-P	CROSS IO RAM	WRP-AP AHRS	RAM ROM	ATTMON -
6	RATMON SVO-P	- EQU-P	IOC IO RAM	- AHRS	- ROM	DMA -
7	- RATMON SVO-P	IO ROM - EQU-P	CROSS IOC IO RAM	WRP-AP - AHRS	RAM - ROM	ATTMON DMA -
8	-	EQU-R	-	SVO-R	NORACC	-
9	- -	IO ROM EQU-R	CROSS -	WRP-AP SVO-R	RAM NORACC	ATTMON -
A	RATMON -	- EQU-R	IOC -	- SVO-R	- NORACC	DMA -
B	- RATMON -	IO ROM - EQU-R	CROSS IOC -	WRP-AP - SVO-R	RAM - NORACC	ATTMON DMA -
C	SVO-P -	EQU-P EQU-R	IO RAM -	AHRS SVO-R	ROM NORACC	- -
D	- SVO-P -	IO ROM EQU-P EQU-R	CROSS IO RAM -	WRP-AP AHRS SVO-R	RAM ROM NORACC	ATTMON - -
E	RATMON SVO-P -	- EQU-P EQU-R	IOC IO RAM -	- AHRS SVO-R	- ROM NORACC	DMA - -
F	- RATMON SVO-P -	IO ROM - EQU-P EQU-R	CROSS IOC IO RAM -	WRP-AP - AHRS SVO-R	RAM - ROM NORACC	ATTMON DMA - -

Refer to table 5-13 for description of codes and suspect LRU.
If AP DIS code = 000000 and AP disengages, check switch wiring to APP.

EXAMPLE: 000400 means AHRS caused the disengage.

Table 5-9. AP ENG Codes (Reasons AP Will Not Engage).

CODE VALUE	DIGIT 1 PROBLEM	DIGIT 2 PROBLEM	DIGIT 3 PROBLEM	DIGIT 4 PROBLEM	DIGIT 5 PROBLEM	DIGIT 6 PROBLEM
0	-	-	-	-	-	-
1	CUT-YO	IO ROM	CROSS	WRP-AP	RAM	ATTMON
2	RATMON	DISSWI	IOC	TRMANN	CUT-RH	DMA
3	CUT-YO RATMON	IO ROM DISSWI	CROSS IOC	WRP-AP TRMANN	RAM CUT-RH	ATTMON DMA
4	SVO-AP	CUT-PO	IO RAM	AHRS	ROM	STRP-E
5	CUT-YO SVO-AP	IO ROM CUT-PO	CROSS IO RAM	WRP-AP AHRS	RAM ROM	ATTMON STRP-E
6	RATMON SVO-AP	DISSWI CUT-PO	IOC IO RAM	TRMANN AHRS	CUT-RH ROM	DMA STRP-E
7	CUT-YO RATMON SVO-AP	IO ROM DISSWI CUT-PO	CROSS IOC IO RAM	WRP-AP TRMANN AHRS	RAM CUT-RH ROM	ATTMON DMA STRP-E
8	CUT-PH	CUT-RO	-	MON-AP	NORACC	ID NUM
9	CUT-YO CUT-PH	IO ROM CUT-RO	CROSS -	WRP-AP MON-AP	RAM NORACC	ATTMON ID NUM
A	RATMON CUT-PH	DISSWI CUT-RO	IOC -	TRMANN MON-AP	CUT-RH NORACC	DMA ID NUM
B	CUT-YO RATMON CUT-PH	IO ROM DISSWI CUT-RO	CROSS IOC -	WRP-AP TRMANN MON-AP	RAM CUT-RH NORACC	ATTMON DMA ID NUM
C	SVO-AP CUT-PH	CUT-PO CUT-RO	IO RAM -	AHRS MON-AP	ROM NORACC	STRP-E ID NUM
D	CUT-YO SVO-AP CUT-PH	IO ROM CUT-PO CUT-RO	CROSS IO RAM -	WRP-AP AHRS MON-AP	RAM ROM NORACC	ATTMON STRP-E ID NUM
E	RATMON SVO-AP CUT-PH	DISSWI CUT-PO CUT-RO	IOC IO RAM -	TRMANN AHRS MON-AP	CUT-RH ROM NORACC	DMA STRP-E ID NUM
F	CUT-YO RATMON SVO-AP CUT-PH	IO ROM DISSWI CUT-PO CUT-RO	CROSS IOC IO RAM -	WRP-AP TRMANN AHRS MON-AP	RAM CUT-RH ROM NORACC	ATTMON DMA STRP-E ID NUM

Refer to table 5-13 for description of codes and suspect LRU.
If AP ENG code = 000000 but AP will not engage, check switch wiring to APP.

EXAMPLE: 200481 means RATMON, AHRS, NORACC, and ATTMON faults.

Table 5-10. YD DIS Codes (Latched Cause of YD Disengage).

CODE VALUE	DIGIT 1 PROBLEM	DIGIT 2 PROBLEM	DIGIT 3 PROBLEM	DIGIT 4 PROBLEM	DIGIT 5 PROBLEM	DIGIT 6 PROBLEM
0	-	-	-	-	-	-
1	EQU-Y	IO ROM	CROSS	-	RAM	-
2	RATMON	-	IOC	WRP-Y	-	DMA
3	EQU-Y	IO ROM	CROSS	-	RAM	-
	RATMON	-	IOC	WRP-Y	-	DMA
4	-	-	IO RAM	AHRS	ROM	-
5	EQU-Y	IO ROM	CROSS	-	RAM	-
	-	-	IO RAM	AHRS	ROM	-
6	RATMON	-	IOC	WRP-Y	-	DMA
	-	-	IO RAM	AHRS	ROM	-
7	EQU-Y	IO ROM	CROSS	-	RAM	-
	RATMON	-	IOC	WRP-Y	-	DMA
	-	-	IO RAM	AHRS	ROM	-
8	SVO-YD	-	-	-	LATACC	-
9	EQU-Y	IO ROM	CROSS	-	RAM	-
	SVO-YD	-	-	-	LATACC	-
A	RATMON	-	IOC	WRP-Y	-	DMA
	SVO-YD	-	-	-	LATACC	-
B	EQU-Y	IO ROM	CROSS	-	RAM	-
	RATMON	-	IOC	WRP-Y	-	DMA
	SVO-YD	-	-	-	LATACC	-
C	-	-	IO RAM	AHRS	ROM	-
	SVO-YD	-	-	-	LATACC	-
D	EQU-Y	IO ROM	CROSS	-	RAM	-
	-	-	IO RAM	AHRS	ROM	-
	SVO-YD	-	-	-	LATACC	-
E	RATMON	-	IOC	WRP-Y	-	DMA
	-	-	IO RAM	AHRS	ROM	-
	SVO-YD	-	-	-	LATACC	-
F	EQU-Y	IO ROM	CROSS	-	RAM	-
	RATMON	-	IOC	WRP-Y	-	DMA
	-	-	IO RAM	AHRS	ROM	-
	SVO-YD	-	-	-	LATACC	-

Refer to table 5-13 for description of codes and suspect LRU.
If YD DIS code = 000000 and YD disengages, check switch wiring to APP.

EXAMPLE: 002000 means IOC caused the disengage.

Table 5-11. YD ENG Codes (Reasons YD Will Not Engage).

CODE VALUE	DIGIT 1 PROBLEM	DIGIT 2 PROBLEM	DIGIT 3 PROBLEM	DIGIT 4 PROBLEM	DIGIT 5 PROBLEM	DIGIT 6 PROBLEM
0	-	-	-	-	-	-
1	CUT-YO	IO ROM	CROSS	-	RAM	-
2	RATMON	DISSWI	IOC	WRP-Y	-	DMA
3	CUT-YO RATMON	IO ROM DISSWI	CROSS IOC	- WRP-Y	RAM -	- DMA
4	CUT-YH	-	IO RAM	AHRS	ROM	STRP-E
5	CUT-YO CUT-YH	IO ROM -	CROSS IO RAM	- AHRS	RAM ROM	- STRP-E
6	RATMON CUT-YH	DISSWI -	IOC IO RAM	WRP-Y AHRS	- ROM	DMA STRP-E
7	CUT-YO RATMON CUT-YH	IO ROM DISSWI -	CROSS IOC IO RAM	- WRP-Y AHRS	RAM - ROM	- DMA STRP-E
8	SVO-YD	-	-	MON-YD	LATACC	ID NUM
9	CUT-YO SVO-YD	IO ROM -	CROSS -	- MON-YD	RAM LATACC	- ID NUM
A	RATMON SVO-YD	DISSWI -	IOC -	WRP-Y MON-YD	- LATACC	DMA ID NUM
B	CUT-YO RATMON SVO-YD	IO ROM DISSWI -	CROSS IOC -	- WRP-Y MON-YD	RAM - LATACC	- DMA ID NUM
C	CUT-YH SVO-YD	- -	IO RAM -	AHRS MON-YD	ROM LATACC	STRP-E ID NUM
D	CUT-YO CUT-YH SVO-YD	IO ROM - -	CROSS IO RAM -	- AHRS MON-YD	RAM ROM LATACC	- STRP-E ID NUM
E	RATMON CUT-YH SVO-YD	DISSWI - -	IOC IO RAM -	WRP-Y AHRS MON-YD	- ROM LATACC	DMA STRP-E ID NUM
F	CUT-YO RATMON CUT-YH SVO-YD	IO ROM DISSWI - -	CROSS IOC IO RAM -	- WRP-Y AHRS MON-YD	RAM - ROM LATACC	- DMA STRP-E ID NUM

Refer to table 5-13 for description of codes and suspect LRU.
If YD ENG code = 000000 but YD will not engage, check switch wiring to APP.

EXAMPLE: 00100A means CROSS, DMA, and ID NUM faults.

Table 5-12. STEER Codes (Reasons for FD Flag).

CODE VALUE	DIGIT 1 PROBLEM	DIGIT 2 PROBLEM	DIGIT 3 PROBLEM	DIGIT 4 PROBLEM	DIGIT 5 PROBLEM	DIGIT 6 PROBLEM
0	-	-	-	-	-	-
1	-	IO ROM	-	P-DATA	RAM	ATTMON
2	-	-	IOC	R-DATA	-	DMA
3	-	IO ROM	-	P-DATA	RAM	ATTMON
	-	-	IOC	R-DATA	-	DMA
4	-	AHRTST	IO RAM	AHRS	ROM	STRP-E
5	-	IO ROM	-	P-DATA	RAM	ATTMON
	-	AHRTST	IO RAM	AHRS	ROM	STRP-E
6	-	-	IOC	R-DATA	-	DMA
	-	AHRTST	IO RAM	AHRS	ROM	STRP-E
7	-	IO ROM	-	P-DATA	RAM	ATTMON
	-	-	IOC	R-DATA	-	DMA
	-	AHRTST	IO RAM	AHRS	ROM	STRP-E
8	-	-	-	-	-	PANEL
9	-	IO ROM	-	P-DATA	RAM	ATTMON
	-	-	-	-	-	PANEL
A	-	-	IOC	R-DATA	-	DMA
	-	-	-	-	-	PANEL
B	-	IO ROM	-	P-DATA	RAM	ATTMON
	-	-	IOC	R-DATA	-	DMA
	-	-	-	-	-	PANEL
C	-	AHRTST	IO RAM	AHRS	ROM	STRP-E
	-	-	-	-	-	PANEL
D	-	IO ROM	-	P-DATA	RAM	ATTMON
	-	AHRTST	IO RAM	AHRS	ROM	STRP-E
	-	-	-	-	-	PANEL
E	-	-	IOC	R-DATA	-	DMA
	-	AHRTST	IO RAM	AHRS	ROM	STRP-E
	-	-	-	-	-	PANEL
F	-	IO ROM	-	P-DATA	RAM	ATTMON
	-	-	IOC	R-DATA	-	DMA
	-	AHRTST	IO RAM	AHRS	ROM	STRP-E
	-	-	-	-	-	PANEL

Refer to table 5-13 for description of codes and suspect LRU.

EXAMPLE: 000300 means P-DATA and R-DATA faults.

Table 5-13. Description of Report Mode Monitors.

NAME	DESCRIPTION
The following terms are used in tables 5-7 through 5-12. The "suspect LRU" listed in this table is a likely cause of the fault. Replace this LRU and then verify that the problem does not recur.	
AHRS	The AHC-1 serial bus from the AHRS is invalid. Suspect the AHC or the FCC; further investigation is required.
AHRTST	The AHRS (AHC) is in test mode.
ATTMON	Basic autopilot pitch and roll attitude data from the AHRS is invalid. Suspect the AHC.
CPU	The main processor has been reset. Suspect the FCC.
CROSS	The XCHAN bus from the other FCC is invalid. Suspect one of the two FCC's.
CUT-AH	An autopilot (pitch or roll) cutout hardware error is detected. This term sets with CUT-PH or CUT-RH. Suspect the FCC.
CUT-AO	An autopilot (pitch or roll) cutout occurrence is detected. This term sets with CUT-PO or CUT-RO. This does not indicate a failed unit.
CUT-PH	A cutout hardware error in the pitch axis is detected. Suspect the FCC.
CUT-PO	A cutout occurrence in the pitch axis is detected. This means that pitch attitude has exceeded certain limits. This does not indicate a failed unit.
CUT-RH	A cutout hardware error in the roll axis is detected. Suspect the FCC.
CUT-RO	A cutout occurrence in the roll axis is detected. This means that roll attitude has exceeded certain limits. This does not indicate a failed unit.
CUT-YH	A cutout hardware error in the yaw axis is detected. Suspect the FCC.
CUT-YO	A cutout occurrence in the yaw axis is detected. This means that yaw attitude has exceeded certain limits. This does not indicate a failed unit.
DISSWI	The disengage switch (AP DISC) is pressed.
DMA	DMA RAM area errors are detected. Suspect the FCC.
EQU-AP	An autopilot (pitch or roll) equalization error is detected. This term sets with EQU-P or EQU-R. Suspect AHC or FCC; further investigation is required.
EQU-P	An equalization error in the pitch axis is detected. This means that the two pitch servo commands are not tracking within certain limits. Suspect AHC or FCC; further investigation is required.
EQU-R	An equalization error in the roll axis is detected. This means that the two roll servo commands are not tracking within certain limits. Suspect AHC or FCC; further investigation is required.
EQU-Y	An equalization error in the yaw axis is detected. This means that the two yaw servo commands are not tracking within certain limits. Suspect AHC or FCC; further investigation is required.
EQU-YD	A yaw damper equalization error is detected. Refer to EQU-Y. Suspect AHC or FCC; further investigation is required.
ID NUM	The software ident numbers of the two FCC's do not match. The first four characters of the code are the main program ID; the last two characters are the I/O program ID. Suspect one of the two FCC's.
IOC	The serial bus from the currently used IOC concentrator is invalid. Only one IOC-3 bus is used at a time. Check the IOC-A BUSERR and IOC-B BUSERR parameters to isolate the IOC. Suspect the IOC or the FCC; further investigation is required.

Table 5-13. Description of Report Mode Monitors (Cont).

NAME	DESCRIPTION
IOC-AB	At least one of the two IOC-3 input buses to the FCC has been diagnosed as invalid. Check the IOC-A BUSERR and IOC-B BUSERR parameters. Further investigation is required.
IO CPU	The I/O processor has been reset. Suspect the FCC.
IO RAM	An I/O processor RAM error is detected. Suspect the FCC.
IO ROM	The I/O processor ROM did not add up to the correct checksum. Suspect the FCC.
LATACC	Basic yaw damper lateral acceleration data from the AHRS is invalid. Suspect the AHC.
MON-AP	The autopilot monitor output (to APP) has failed. Suspect the FCC.
MONHDW	A monitor output hardware error is detected. This term sets with MON-AP or MON-YD. Suspect the FCC.
MON-YD	The yaw damper monitor output (to APP) has failed. Suspect the FCC.
NORACC	Basic autopilot normal acceleration data from the AHRS is invalid. Suspect the AHC.
PANEL	Communication between the MSP and the FCC is invalid. Suspect the MSP or the FCC; further investigation is required.
P-DATA	Pitch outer loop data monitor is invalid. This means that data required for pitch computations is invalid. Suspect the external system supplying pitch data in that mode.
RAM	A main processor RAM error is detected. Suspect the FCC.
RATMON	Basic pitch, roll, or yaw rate data from the AHRS is invalid. Suspect the AHC.
R-DATA	Roll outer loop data monitor is invalid. This means that data required for roll computations is invalid. Suspect the external system supplying roll data in that mode.
ROM	The main processor ROM did not add up to the correct checksum. Suspect the FCC.
STRP-E	External aircraft strapping is not compatible with the FCC configuration ROM. Either the IAPS configuration strapping is incorrect or the FCC has an incorrect software version.
SVO-AP	An autopilot (pitch or roll) servo amplifier error is detected. This term sets with SVO-P or SVO-R. Suspect AHC, FCC, or pitch/roll servos; further investigation is required.
SVO-P	A servo amplifier error in the pitch axis is detected. This means either a hardware failure occurred or that the inputs to the two halves of the pitch servo amplifier are not alike. Suspect AHC, FCC, or pitch servo; further investigation is required.
SVO-R	A servo amplifier error in the roll axis is detected. This means either a hardware failure occurred or that the inputs to the two halves of the roll servo amplifier are not alike. Suspect AHC, FCC, or roll servo; further investigation is required.
SVO-YD	A yaw damper servo amplifier error is detected. This means either a hardware failure occurred or that the inputs to the two halves of the yaw servo amplifier are not alike. Suspect AHC, FCC, or yaw servo; further investigation is required.
TRIM	A trim system failure is detected. Suspect the aircraft trim system or the FCC.
TRMANN	The pitch trim annunciator lamp test failed. Suspect the bulb.
WRP-AP	An autopilot (pitch or roll) wraparound error is detected. Check the WRAP-P ERRORS and WRAP-R ERRORS parameters. Suspect the FCC.
WRP-Y	A wraparound error in the yaw axis is detected. Suspect the FCC.
WRP-YD	A yaw damper wraparound error is detected. Suspect the FCC.

5.6.5.2 Input Mode

The input mode displays a readout of selected signals coming into the FCC. This mode is especially useful for isolating a failed LRU that applies signals to the FCC. The input mode diagnostic page displays five lines of input signals. Each line contains the signal name, a LEFT value, a RIGHT value, and a unit of measure (if applicable). Line keys select the input mode operations. Refer to figure 5-9.

The name column lists five input signals. The LEFT column displays the signal value at the input of the no. 1 FCC computer. The RIGHT column displays the signal value at the input of the no. 2 FCC computer. Dashes are displayed instead of a signal value if that input is missing or invalid. Table 5-14 is a complete list of input mode parameters available for display, the signal source, a signal description, and the units of measure.

The cursor is always displayed at the left edge of the name column. The cursor indicates which parameter line is active. If the cursor is green: press the AP XFR button to activate the APP knobs, cause the AP XFR annunciator to flash, and turn the cursor yellow.

Press the MOVE CURSOR line key to move the cursor to the next line. An alternate way to move the cursor is to press one active MSP mode button.

Press the PREV or NEXT ITEM SCROLL line key to change the signal displayed on the cursored line to the previous or next item in the input mode parameter list. Parameters are listed in table 5-14 and are scrolled in alphanumeric order. An alternate way to scroll display parameters is to rotate the APP pitch wheel.

IOC labels are displayed below the five signal lines in both the LEFT and RIGHT columns. The label in the LEFT column indicates which IOC concentrator input bus (IOC-LA or IOC-LB) is currently being used by the left FCC computer. The label in the RIGHT column indicates which concentrator bus (IOC-RA or IOC-RB) is being used by the right FCC. Normally each FCC automatically selects which IOC bus to use; however the operator may toggle to the other bus by raising and then manually lowering the APP engage levers. Both FCC's then attempt to use the other IOC bus. If the new IOC bus is valid, the FCC uses the new bus. If the new IOC bus is invalid, the FCC switches back to using the old valid bus.

Press the SELECT MODE line key to cycle the MFD display to the next FCS diagnostic mode. When this key is pressed in input mode, the MFD displays the output mode diagnostic page. An alternate way to cycle modes is to simultaneously press any two active MSP mode buttons.

Press the EXIT line key to exit the FCS diagnostics. An alternate way to exit diagnostics is to simultaneously press any three active MSP mode buttons. Then press the IDX line key to display the MFD index page.

The radar mode line annunciates the RTA mode and operating status. The MFD mode line labels the functions of active MFD line keys.

Press the IDX line key to display the index page.
Press the RCL line key to recall the previously used checklist.
Press the EMG line key to display the emergency checklist menu.

The display source indicator is an arrow which points left or right to indicate which FCC is providing display data to the MFD.

The following paragraphs provide a few examples of situations where the input diagnostic page is a valuable troubleshooting tool.

a. The values displayed in the LEFT and RIGHT columns of any input signal should agree within reason. For example, ALT/B 15125 235 FEET indicates an air data (ALI/ADC) problem in the side that displays the incorrect barometric altitude value.
b. The input mode is very useful when checking out the APP and MSP panel functions. Refer to the ENGA/P, ENGY/D, KNOB-P, KNOB-R, and SWIXXX parameters. The engage parameters should be true when the levers are up and false when the levers are down. The pitch knob parameter should vary ±1.8 volts when the APP pitch wheel is turned and the roll knob parameter ±4.3 volts when the APP turn knob is rotated. For example, the SWIHDG parameter should be true when the HDG button on the MSP is pressed and false when it is released.

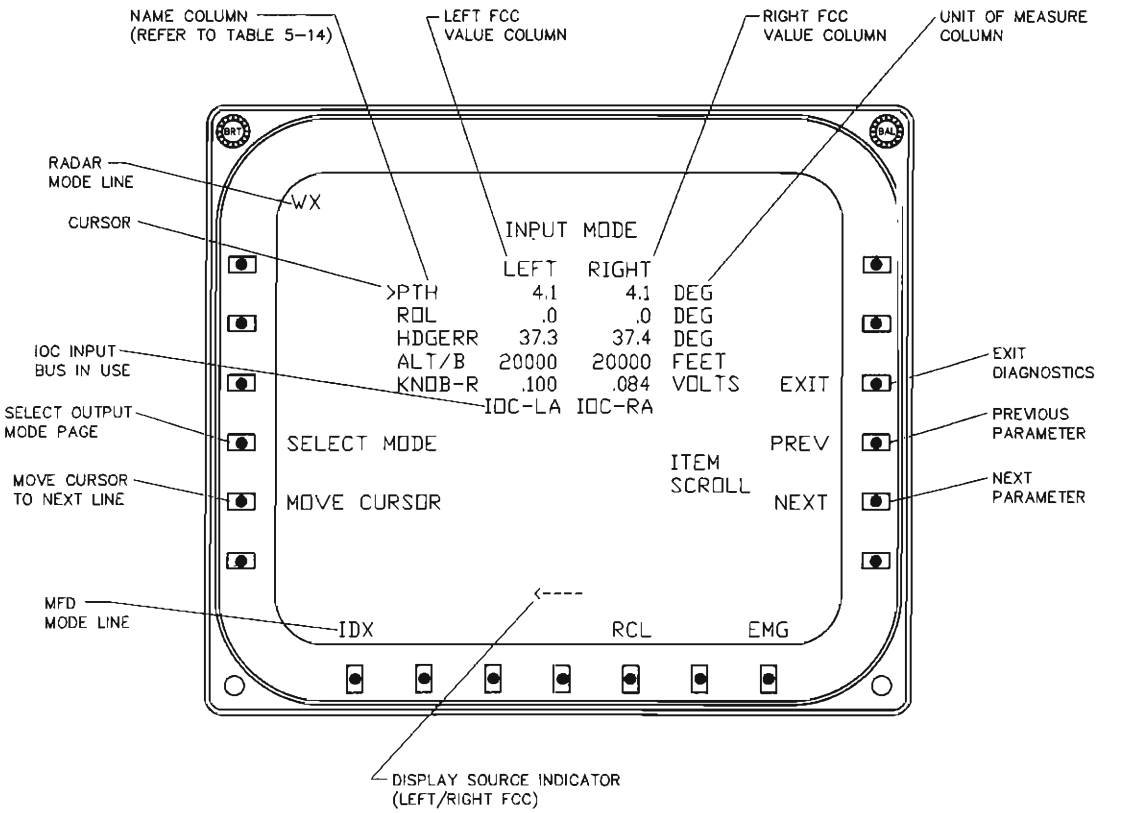

CGO–0355–08–AC–0

Input Mode Diagnostic Page
Figure 5-9

c. External systems that apply input signals to the FCC can be verified by monitoring these inputs while that system is exercised or tested. For example, the left IASBUG input value should change when the bug knob on the pilot's ASI is turned. The VORBRG input value should be 0 DEG while the NAV receiver is in test mode.

Table 5-14 lists all available input parameters. The most useful inputs are decoded and displayed with a unit of measure (such as feet or degrees) so that this value can be easily compared with related displays/ indications in the aircraft. Some inputs are useful only to engineering but are included in the table for completeness.

Most inputs to the FCC are first applied to IOC I/O concentrators and then to the FCC on two redundant IOC-3 data buses. The AHC-1 input bus is applied directly (not through an IOC) to the FCC computer. The SOURCE column of table 5-14 lists the name of the LRU that originates each signal, the data bus (IOC-3 or AHC-1, if applicable) bringing the input to the FCC, and the octal label of the data word.

Input data provided on an IOC or AHC data bus may be bit-read as follows: ARINC input data is formatted as a 32-bit word. Bits 1-8 contain the word label, bits 9-10 contain the SDI code, bits 11-13 contain secondary data, bits 14-29 contain primary data, bits 30-31 contain the SSM code, and bit 32 is for parity. Table 5-14 provides an "SSMDSI" value for each input label. This value consists of three digits: the SSM, secondary data, and the SDI. The SSM digit is 0 (failed), 1 (no computed data), 2 (unit in test), or 3 (normal). The SDI digit is normally 1 (LRU number 1) or 2 (LRU number 2). Bits 14-29 contain the primary data in the word and are normally decoded into a signal value that may be selected for display as a different parameter. For example, heading error is supplied by the ND to the FCC on the IOC-3 bus (label 302). View this input by displaying the HDGERR and the 302 (SSMDSI value) input parameters. Note that some primary data is not decoded into a signal value but is displayed as a hexadecimal value. The unit of measure for these signals is displayed as "29-14H."

Table 5-14. Input Mode Parameter List.

NAME	SOURCE LRU (BUS WORD)	DESCRIPTION (UNIT OF MEASURE)
024	IOC (IOC-3 label 024)	SSM, bits 13-11, SDI (SSMDSI)
102	ADC (IOC-3 label 102)	SSM, bits 13-11, SDI (SSMDSI)
103	ADC (IOC-3 label 103)	SSM, bits 13-11, SDI (SSMDSI)
104	ADC (IOC-3 label 104)	SSM, bits 13-11, SDI (SSMDSI)
106	ADC (IOC-3 label 106)	SSM, bits 13-11, SDI (SSMDSI)
116	ND (IOC-3 label 116)	SSM, bits 13-11, SDI (SSMDSI)
117	ND (IOC-3 label 117)	SSM, bits 13-11, SDI (SSMDSI)
121	PFD (IOC-3 label 121)	SSM, bits 13-11, SDI (SSMDSI)
122	PFD (IOC-3 label 122)	SSM, bits 13-11, SDI (SSMDSI)
155LT	MFD (IOC-3 label 155)	SSM, bits 13-11, SDI (SSMDSI)
155RT	MFD (IOC-3 label 155)	SSM, bits 13-11, SDI (SSMDSI)
164	RAC (IOC-3 label 164)	SSM, bits 13-11, SDI (SSMDSI)
172	ND (IOC-3 label 172)	SSM, bits 13-11, SDI (SSMDSI)
203	ADC (IOC-3 label 203)	SSM, bits 13-11, SDI (SSMDSI)
204	ADC (IOC-3 label 204)	SSM, bits 13-11, SDI (SSMDSI)
205	ADC (IOC-3 label 205)	SSM, bits 13-11, SDI (SSMDSI)
206	ADC (IOC-3 label 206)	SSM, bits 13-11, SDI (SSMDSI)
207	ADC (IOC-3 label 207)	SSM, bits 13-11, SDI (SSMDSI)
210	ADC (IOC-3 label 210)	SSM, bits 13-11, SDI (SSMDSI)
211	ADC (IOC-3 label 211)	SSM, bits 13-11, SDI (SSMDSI)
212	ADC (IOC-3 label 212)	SSM, bits 13-11, SDI (SSMDSI)
213	ADC (IOC-3 label 213)	SSM, bits 13-11, SDI (SSMDSI)
222	ND (IOC-3 label 222)	SSM, bits 13-11, SDI (SSMDSI)
251	ND (IOC-3 label 251)	SSM, bits 13-11, SDI (SSMDSI)
270ADC	ADC (IOC-3 label 270)	SSM, bits 13-11, SDI (SSMDSI)
270AHR	AHC (AHC-1 label 270)	SSM, bits 13-11, SDI (SSMDSI)
271	ADC (IOC-3 label 271)	SSM, bits 13-11, SDI (SSMDSI)
272	FMC (IOC-3 label 272)	SSM, bits 13-11, SDI (SSMDSI)
272LT	DAU (IOC-3 label 272)	SSM, bits 13-11, SDI (SSMDSI)
272RT	DAU (IOC-3 label 272)	SSM, bits 13-11, SDI (SSMDSI)
273	DAU (IOC-3 label 273)	SSM, bits 13-11, SDI (SSMDSI)
301	ND (IOC-3 label 301)	SSM, bits 13-11, SDI (SSMDSI)
302	ND (IOC-3 label 302)	SSM, bits 13-11, SDI (SSMDSI)
314	AHC (AHC-1 label 314)	SSM, bits 13-11, SDI (SSMDSI)
315	ND (IOC-3 label 315)	SSM, bits 13-11, SDI (SSMDSI)
320	AHC (AHC-1 label 320)	SSM, bits 13-11, SDI (SSMDSI)
324	AHC (AHC-1 label 324)	SSM, bits 13-11, SDI (SSMDSI)
325	AHC (AHC-1 label 325)	SSM, bits 13-11, SDI (SSMDSI)
326	AHC (AHC-1 label 326)	SSM, bits 13-11, SDI (SSMDSI)
327	AHC (AHC-1 label 327)	SSM, bits 13-11, SDI (SSMDSI)
330	AHC (AHC-1 label 330)	SSM, bits 13-11, SDI (SSMDSI)
331	AHC (AHC-1 label 331)	SSM, bits 13-11, SDI (SSMDSI)
332	AHC (AHC-1 label 332)	SSM, bits 13-11, SDI (SSMDSI)
333	AHC (AHC-1 label 333)	SSM, bits 13-11, SDI (SSMDSI)
336	AHC (AHC-1 label 336)	SSM, bits 13-11, SDI (SSMDSI)
337	AHC (AHC-1 label 337)	SSM, bits 13-11, SDI (SSMDSI)
340LT	DAU (IOC-3 label 340)	SSM, bits 13-11, SDI (SSMDSI)
340RT	DAU (IOC-3 label 340)	SSM, bits 13-11, SDI (SSMDSI)
350	IOC (IOC-3 label 350)	SSM, bits 13-11, SDI (SSMDSI)
352	IOC (IOC-3 label 352)	SSM, bits 13-11, SDI (SSMDSI)

Table 5-14. Input Mode Parameter List (Cont).

NAME	SOURCE LRU (BUS WORD)	DESCRIPTION (UNIT OF MEASURE)
353	IOC (IOC-3 label 353)	SSM, bits 13-11, SDI (SSMDSI)
362	AHC (AHC-1 label 362)	SSM, bits 13-11, SDI (SSMDSI)
363	AHC (AHC-1 label 363)	SSM, bits 13-11, SDI (SSMDSI)
364	AHC (AHC-1 label 364)	SSM, bits 13-11, SDI (SSMDSI)
372	ND (IOC-3 label 372)	SSM, bits 13-11, SDI (SSMDSI)
375	AHC (AHC-1 label 375)	SSM, bits 13-11, SDI (SSMDSI)
376	AHC (AHC-1 label 376)	SSM, bits 13-11, SDI (SSMDSI)
ACCA/H	AHC (AHC-1 label 375)	Acceleration, along heading (G'S)
ACCA/T	AHC (AHC-1 label 362)	Acceleration, along track (G'S)
ACCLAT	AHC (AHC-1 label 332)	Acceleration, lateral (G'S)
ACCLON	AHC (AHC-1 label 331)	Acceleration, longitudinal (G'S)
ACCNOR	AHC (AHC-1 label 333)	Acceleration, normal (G'S)
ACCVER	AHC (AHC-1 label 364)	Acceleration, vertical (G'S)
ACCX/H	AHC (AHC-1 label 376)	Acceleration, cross heading (G'S)
ACCX/T	AHC (AHC-1 label 363)	Acceleration, cross track (G'S)
ADLGC1	ADC (IOC-3 label 270)	Air data logic word 1 (29-14H)
ADLGC2	ADC (IOC-3 label 271)	Air data logic word 2 (29-14H)
AHRLGC	AHC (AHC-1 label 270)	AHRS logic word (29-14H)
AILCMD	FCC sample/hold	Aileron servo cmd wraparound (VOLTS)
AILMON	FCC servo amplifier	Aileron servo amplifier monitor (TRUE/FALSE)
AILSVO	SVO	Aileron servo motor voltage (VOLTS)
*ALT/B	ADC (IOC-3 label 204)	Altitude, barometric (FEET)
ALT/P	ADC (IOC-3 label 203)	Altitude, pressure (FEET)
ALTBUG	ADC (IOC-3 label 102)	Altitude, preselect (FEET)
AP MON	FCC wraparound	Autopilot monitor valid (TRUE/FALSE)
APCONN	Yoke, AP DISC button	Autopilot disconnect not (TRUE/FALSE)
ASVOER	FCC servo amplifier	Aileron servo error (VOLTS)
CMDPTH	PFD (IOC-3 label 122)	Command, pitch (DEG)
CMDROL	PFD (IOC-3 label 121)	Command, roll (DEG)
CRSDAT	ND (IOC-3 label 301)	Course datum (DEG)
DAULGC	DAU (IOC-3 label 273)	DAU logic word (29-14H)
DEVLAT	ND (IOC-3 label 116)	Deviation, lateral (29-14H)
DEVVER	ND (IOC-3 label 117)	Deviation, vertical (29-14H)
DIS	ND (IOC-3 label 251)	Distance (NM)
ELECMD	FCC sample/hold	Elevator servo cmd wraparound (VOLTS)
ELEMON	FCC servo amplifier	Elevator servo amplifier monitor (TRUE/FALSE)
ELESVO	SVO	Elevator servo motor voltage (VOLTS)
ELGCLT	DAU (IOC-3 label 272)	Engine logic word, left (29-14H)
ELGCRT	DAU (IOC-3 label 272)	Engine logic word, right (29-14H)
ENGA/P	APP	Engage lever up, autopilot (TRUE/FALSE)
ENGY/D	APP	Engage lever up, yaw damper (TRUE/FALSE)
ESVOER	FCC servo amplifier	Elevator servo error (VOLTS)
FMSLGC	FMC (IOC-3 label 272)	FMS logic word (29-14H)
GNDMX0	FCC internal	Ground for multiplexer 0 (VOLTS)
GNDMX1	FCC internal	Ground for multiplexer 1 (VOLTS)
*HDGERR	ND (IOC-3 label 302)	Heading error (DEG)
HDGMAG	AHC (AHC-1 label 320)	Heading, magnetic (DEG)
HDGTRU	AHC (AHC-1 label 314)	Heading, true (DEG)
IAS	ADC (IOC-3 label 206)	Indicated airspeed (KNOTS)
IASBUG	ADC (IOC-3 label 103)	Indicated airspeed bug (KNOTS)

Table 5-14. Input Mode Parameter List (Cont).

NAME	SOURCE LRU (BUS WORD)	DESCRIPTION (UNIT OF MEASURE)
IOCDIA	IOC (IOC-3 label 350)	IOC diagnostics (29-14H)
IOCLG1	IOC (IOC-3 label 352)	IOC logic word 1 (29-14H)
IOCLG2	IOC (IOC-3 label 353)	IOC logic word 2 (29-14H)
IOCMAP	IOC (IOC-3 label 024)	IOC map version (29-14H)
KNOB-P	APP	Knob, pitch, ±1.8 V dc (VOLTS)
*KNOB-R	APP	Knob, roll, ±4.3 V dc (VOLTS)
MACBUG	ADC (IOC-3 label 106)	Mach bug (MACH)
MACH	ADC (IOC-3 label 205)	Mach (MACH)
MFDLT	MFD (IOC-3 label 155)	MFD mode word, valid left side only (29-14H)
MFDRT	MFD (IOC-3 label 155)	MFD mode word, valid right side only (29-14H)
NAVLGC	ND (IOC-3 label 172)	NAV logic word (29-14H)
PNLTST	MSP	Panel wraparound, oscillating (TRUE/FALSE)
*PTH	AHC (AHC-1 label 324)	Pitch (DEG)
PTHR/E	AHC (AHC-1 label 336)	Pitch rate, Euler (DEG/S)
PTHRAT	AHC (AHC-1 label 326)	Pitch rate (DEG/S)
RADALT	RAC (IOC-3 label 164)	Radio altitude (FEET)
*ROL	AHC (AHC-1 label 325)	Roll (DEG)
ROLR/E	AHC (AHC-1 label 337)	Roll rate, Euler (DEG/S)
ROLRAT	AHC (AHC-1 label 327)	Roll rate (DEG/S)
RSVOER	FCC servo amplifier	Rudder servo error (VOLTS)
RUDCMD	FCC sample/hold	Rudder servo cmd wraparound (VOLTS)
RUDMON	FCC servo amplifier	Rudder servo amplifier monitor (TRUE/FALSE)
RUDSVO	SVO	Rudder servo motor voltage (VOLTS)
SAT	ADC (IOC-3 label 213)	Static air temperature (C)
SPACH3	Interconnect	Spare analog input, channel 3 (VOLTS)
SPACH4	Interconnect	Spare analog input, channel 4 (VOLTS)
SPAIN1	Interconnect	Spare logic input 1 (TRUE/FALSE)
SPAIN2	Interconnect	Spare logic input 2 (TRUE/FALSE)
SPAIN3	Interconnect	Spare logic input 3 (TRUE/FALSE)
STPEXT	IAPS plug	Strap, external, 8X = pilot side (HEX)
STRAP0	Interconnect	Option strap 0 (TRUE/FALSE)
STRAP1	Interconnect	Option strap 1 (TRUE/FALSE)
STRAP2	Interconnect	Option strap 2 (TRUE/FALSE)
STRAP3	Interconnect	Option strap 3 (TRUE/FALSE)
STRAP4	Interconnect	Option strap 4 (TRUE/FALSE)
STRAP5	Interconnect	Option strap 5 (TRUE/FALSE)
STRAP6	Interconnect	Option strap 6 (TRUE/FALSE)
STRAP7	Interconnect	Option strap 7 (TRUE/FALSE)
SWI1/2	MSP	Switch, 1/2 BANK mode (TRUE/FALSE)
SWI2-1	MSP	Switch, spare on byte 2, bit 1 (TRUE/FALSE)
SWI2-2	MSP	Switch, spare on byte 2, bit 2 (TRUE/FALSE)
SWI2-3	MSP	Switch, spare on byte 2, bit 3 (TRUE/FALSE)
SWI2-4	MSP	Switch, spare on byte 2, bit 4 (TRUE/FALSE)
SWI2-5	MSP	Switch, spare on byte 2, bit 5 (TRUE/FALSE)
SWI2-6	MSP	Switch, spare on byte 2, bit 6 (TRUE/FALSE)

Table 5-14. Input Mode Parameter List (Cont).

NAME	SOURCE LRU (BUS WORD)	DESCRIPTION (UNIT OF MEASURE)
SWIALT	MSP	Switch, ALT hold mode (TRUE/FALSE)
SWIAPP	MSP	Switch, APPR mode (TRUE/FALSE)
SWICLI	MSP	Switch, CLIMB mode (TRUE/FALSE)
SWIDES	MSP	Switch, DESCEND mode (TRUE/FALSE)
SWIG/A	Throttle button	Switch, GO AROUND mode (TRUE/FALSE)
SWIHDG	MSP	Switch, HDG mode (TRUE/FALSE)
SWIIAS	MSP	Switch, IAS mode (TRUE/FALSE)
SWIMAC	MSP	Switch, MACH mode (TRUE/FALSE)
SWINAV	MSP	Switch, NAV mode (TRUE/FALSE)
SWIPFL	MSP	Switch, IAS PROF mode (TRUE/FALSE)
SWIPFM	MSP	Switch, PERFORM SELECT mode (TRUE/FALSE)
SWIPRE	MSP	Switch, altitude preselect mode (TRUE/FALSE)
SWISPD	MSP	Switch, SPEED mode (TRUE/FALSE)
SWITRB	APP	Switch, TURB mode (TRUE/FALSE)
SWIVNV	MSP	Switch, VNAV mode (TRUE/FALSE)
SWIVS	MSP	Switch, VS mode (TRUE/FALSE)
SWIXFR	APP	Switch, AP XFR mode (TRUE/FALSE)
SYNCSW	Yoke, VERT SYNC button	Synchronization switch (TRUE/FALSE)
TAS	ADC (IOC-3 label 210)	True airspeed (KNOTS)
TAT	ADC (IOC-3 label 211)	Total air temperature (C)
TORQLT	DAU (IOC-3 label 340)	Torque, left engine (%)
TORQRT	DAU (IOC-3 label 340)	Torque, right engine (%)
TRMARM	FCC wraparound	Trim arm (TRUE/FALSE)
TRMCMD	FCC wraparound	Trim command (TRUE/FALSE)
TRMOFF	FCC wraparound	Trim fail annunciator off (TRUE/FALSE)
TRMRAT	Trim system	Trim rate (VOLTS)
VMO	ADC (IOC-3 label 207)	Max operating speed (KNOTS)
VORBRG	ND (IOC-3 label 222)	VOR bearing (DEG)
VS	ADC (IOC-3 label 212)	Vertical speed (FT/MIN)
VSBUG	ADC (IOC-3 label 104)	Vertical speed bug (FT/MIN)
WINDIR	ND (IOC-3 label 372)	Wind direction (DEG)
WINSPD	ND (IOC-3 label 315)	Wind speed (KNOTS)
YAWRAT	AHC (AHC-1 label 330)	Yaw rate (DEG/S)
YD MON	FCC wraparound	Yaw damper monitor valid (TRUE/FALSE)

*These items are initially displayed.

This page intentionally left blank.

5.6.5.3 Output Mode

The output mode provides readout and control of selected FCC outputs. The output controlling feature of this mode is enabled only when both FCC's are in diagnostic mode and the aircraft is on the ground. The output mode diagnostic page displays five lines of output signals. Each line contains the signal name, LEFT output, RIGHT output, and modify options (if applicable). Line keys select the output mode operations. Refer to figure 5-10.

The name column lists five output signals. The LEFT column displays the output signal from the no. 1 FCC computer. The RIGHT column displays the output signal from the no. 2 FCC computer. Table 5-15 is a complete list of available outputs.

The cursor is displayed at the left edge of the name column. The cursor indicates which parameter line is active. If the cursor is green, press the AP XFR button to activate the APP knobs and turn the cursor yellow.

Press the MOVE CURSOR line key to move the cursor to the next line. An alternate way to move the cursor is to press one active MSP mode button.

Press the PREV or NEXT ITEM SCROLL line key to change the signal displayed on the cursored line to the previous or next item in the output mode parameter list. Parameters are listed in table 5-15 and are scrolled in alphanumeric order. An alternate way to scroll display parameters is to rotate the APP pitch wheel.

The FCC outputs can always be displayed but can only be controlled when both computers are in diagnostic mode (TEST annunciates on both PFD's). If it is possible to control (modify) any displayed output, the word "MODIFY" appears as a column heading. If the active (cursored) line can be modified, then EITHER, BOTH, LEFT, or RIGHT is displayed on that line in the MODIFY column.

When EITHER is displayed in the MODIFY column, the left and right FCC logic outputs can be modified independently. Press the TOGGLE LEFT line key (or rotate the APP turn knob left) to change the logic output of the left FCC. Press the TOGGLE RIGHT line key (or rotate the APP turn knob right) to change the logic output of the right FCC.

When BOTH is displayed in the MODIFY column, the left and right FCC linear outputs can be modified synchronously. Press and hold the SLEW MINUS line key (or rotate the APP turn knob left) to synchronize both linear outputs to the master FCC value and then change both outputs in a minus direction. Press and hold the SLEW PLUS line key (or rotate the APP turn knob right) to synchronize both linear outputs to the master FCC value, and then change both outputs in a plus direction. The master FCC is the one providing display data to the MFD (indicated by the arrow on the bottom of the page and selected by the AP XFR button).

When LEFT is displayed in the MODIFY column, only the left FCC output can be modified. When RIGHT is displayed in the MODIFY column, only the right FCC can be modified. Press the TOGGLE or SLEW line keys to change the modifiable output. Note that the EITHER and BOTH modify options are not available unless both FCC's are in the output mode. Press the AP XFR button to alternately select left and right side display data and ensure that both FCC's are in output mode.

Press the SELECT MODE line key to cycle the MFD display to the next FCS diagnostic mode. When this key is pressed in output mode, the MFD displays the report mode diagnostic page. An alternate way to cycle modes is to simultaneously press any two active MSP mode buttons.

Press the EXIT line key to exit the FCS diagnostics. An alternate way to exit diagnostics is to simultaneously press any three active MSP mode buttons. Then press the IDX line key to display the MFD index page.

The radar mode line annunciates the RTA mode and operating status. The MFD mode line labels the functions of active MFD line keys.

Press the IDX line key to display the index page.
Press the RCL line key to recall the previously used checklist.
Press the EMG line key to display the emergency checklist menu.

The display source indicator is an arrow which points left or right to indicate which FCC is providing display data to the MFD. In the output mode, this indicator is especially useful. Both FCC's must be in the output mode (not just in diagnostics) to fully utilize the modify options. Since only one FCC provides display data to the MFD, it is helpful to press the AP XFR button and check the selected mode of the other FCC prior to beginning troubleshooting

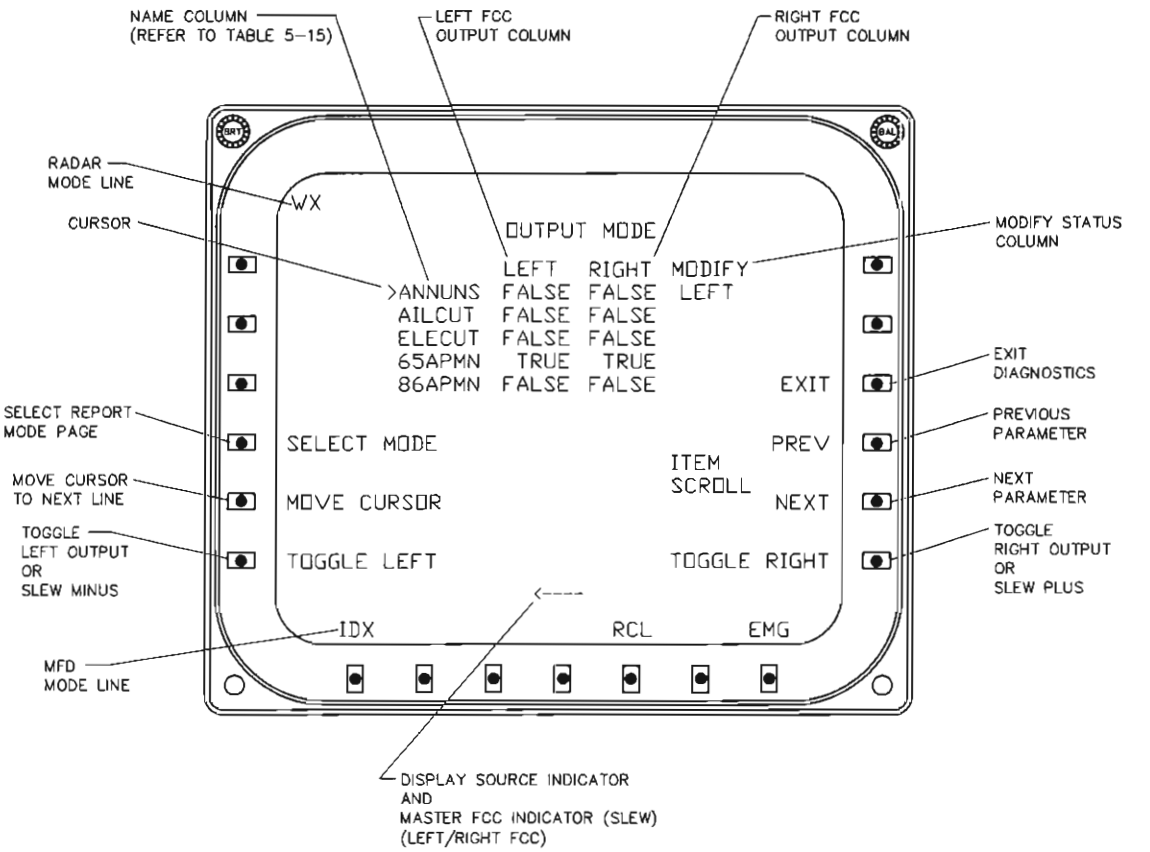

Output Mode Diagnostic Page
Figure 5-10

effort using the output mode. The arrow also indicates the master (controlling) FCC when both outputs are synchronously slewed.

Table 5-15 lists all available output parameters, a signal description, and the modification range. Some typical ways to use the output mode are provided below:

a. Set the ANNUNS parameter to TRUE to light the aircraft annunciators controlled by the selected FCC. This is one way to verify the annunciator bulbs.
b. The output mode can also be used to drive the servos. First, set the 65APMN, 65YDMN, 86APMN, and 86YDMN parameters to TRUE. This overrides the FCC internal monitors to a valid condition. Next, engage the autopilot (raise APP levers). Then select the AILCMD (or ELECMD/RUDCMD) parameter and move the cursor to this line. Press the SLEW PLUS or SLEW MINUS line keys (or rotate the APP turn knob) to apply some servo command voltage (within ±10 V dc). The control wheel (or rudder pedals) should move as the servo runs.
c. Set the AILCUT (or ELECUT/RUDCUT) parameters to TRUE to simulate a cutout condition and disengage the autopilot. The autopilot will not engage as long as any cutout is TRUE.
d. The output mode features several trim parameters which can be used to operate the aircraft pitch trim system. Note that the two FCC computers function together to run the servos and the pitch trim system. Some trim parameters apply to only one FCC. These parameters display dashes in the unused (LEFT or RIGHT) column.

Table 5-15. Output Mode Parameter List.

NAME	DESCRIPTION (MODIFY RANGE)
AILCMD	Aileron servo command voltage (±10 V dc)
*AILCUT	Aileron servo cutout logic (TRUE/FALSE)
*ANNUNS	All annunciators on (TRUE/FALSE)
DNARM	Trim down arm, right side only (TRUE/FALSE)
DNCMD	Trim down command, percent of max, left side only (.0 to 99.9%)
ELECMD	Elevator servo command voltage (±10 V dc)
*ELECUT	Elevator servo cutout logic (TRUE/FALSE)
PTHSTR	Pitch steering command, not used (±180°)
ROLSTR	Roll steering command, not used (±180°)
RUDBST	Rudder boost, not used (TRUE/FALSE)
RUDCMD	Rudder servo command voltage (±10 V dc)
RUDCUT	Rudder servo cutout logic (TRUE/FALSE)
TRLY-P	Pitch trim relay control, enables trim if engaged (TRUE/FALSE)
UPARM	Trim up arm, left side only (TRUE/FALSE)
UPCMD	Trim up command, percent of max, right side only (.0 to 99.9%)
*65APMN	6502 I/O processor autopilot monitor valid (TRUE/FALSE)
65YDMN	6502 I/O processor yaw damper monitor valid (TRUE/FALSE)
*86APMN	8086 main processor autopilot monitor valid (TRUE/FALSE)
86YDMN	8086 main processor yaw damper monitor valid (TRUE/FALSE)

*These items are initially displayed.

The AILCUT, ELECUT, and RUDCUT outputs cannot be set to FALSE if the FCC I/O processor sets them to TRUE.

65APMN, 65YDMN, 86APMN, 86YDMN must be true and AILCUT, ELECUT, RUDCUT must be false to engage.

5.7 AVIONICS LRU FAULT ISOLATION PROCEDURE

The avionics LRU's in the Starship are designed to be highly reliable units with exceptional MTBF (mean time between failure) performance. If a unit does fail, two built-in diagnostic systems make fault isolation much easier than was previously possible with conventional avionics systems.

Before beginning any troubleshooting effort, the flight-line technican must become familiar with the diagnostics which are described in paragraph 5.6 of this section. Note that no carry-on test equipment is required to operate the diagnostics but some troubleshooting equipment may prove helpful. Suggested troubleshooting equipment is listed in table 5-1.

The purpose of the diagnostics system is to quickly isolate a failed LRU. Troubleshooting instructions are presented in two levels. Level 1 is the initial effort, and level 2 is a more detailed secondary approach to finding the malfunctioning unit.

Level 1 troubleshooting provides a short and simple procedure which should detect a problem LRU more than 90 percent of the time. Perform this procedure when a problem is first suspected and after any LRU is replaced (to verify troubleshooting success). If a problem exists which is not found by this procedure, then proceed to level 2 troubleshooting.

Level 2 troubleshooting provides a single-page test procedure for each avionics LRU. These pages are organized according to subsystem (IDS, IAPS, ADS, AHS, FCS, FMS, CS, NS, WXR, and ADAS). Each page is a procedure which checks a unit to confirm proper operation.

Note

While performing any troubleshooting effort, always watch the MSG annunciator on the CDU. This annunciator flashes whenever the diagnostics detect a failure. If MSG flashes, press the MSG key on the CDU and look for an AVIONICS FAULT message. If this message is displayed, immediately check the AVIONICS STATUS page and note the failed unit and fault code.

Caution

Do not remove any avionics LRU with power applied to the unit. Pull the appropriate circuit breaker before removing the LRU or the unit may be damaged.

5.7.1 Level 1 Troubleshooting

The level 1 troubleshooting procedure is provided in table 5-16. Perform this procedure when a problem is first suspected. If this procedure does not isolate the problem or if a failure is still suspected, then go to level 2 troubleshooting. This procedure is also useful as a quick method to verify proper system operation after a maintenance action is completed.

Note that the following units do not report to the level 1 diagnostics: AAP, APP, ATC, CHP, DBU, FDU, SDD, SDU, SVO, and TDR. If there is reason to suspect a failure in any of these units, then proceed directly to level 2 troubleshooting.

The PWR modules (IAPS) power the diagnostic systems. If diagnostics do not appear functional, check that all PWR monitor lights are on.

Table 5-16. Level 1 Troubleshooting Procedure.

STEP	PROCEDURE
0.0	Apply power to all avionics systems. Wait 5 minutes for the diagnostic system to stabilize.
1.0	Display the AVIONICS STATUS page on the MFD (selected from IDX/index page). If NO FAULTS displays: All reporting LRU's are normal. Go to step 2.0. If LRU status is OFF-CHKBREAKR: Check for a tripped circuit breaker. If 28-volt power is applied to the unit, replace that LRU. Go to step 4.0. If LRU status is FAILED: Replace that LRU. Go to step 4.0. If LRU status is OVERHEAT: An IAPS power supply is overheating. Check the IAPS blower. If air is circulating, replace that PWR module. Go to step 4.0.
2.0	If a problem is suspected for any nonreporting LRU's (listed below), go to level 2 troubleshooting. **Note** The following major LRU's do not report to the AVIONICS STATUS page: AAP, APP, ATC, CHP, DBU, FDU, SDD, SDU, SVO, and TDR. If no problem is suspected, go to step 3.0.
3.0	If an autopilot or flight director problem is suspected, display the REPORT MODE diagnostic page (selected from IDX page by pressing MAINTENANCE and then FCS DIAGNOSTICS line keys; then follow displayed procedure). Use the SUMMARY line keys to investigate nonzero codes. If an LRU is replaced, go to step 0.0. If REPAIR (error summary) code is nonzero: Investigate the code. If AP/YD will not engage: Investigate AP ENG and YD ENG codes. If AP/YD disengaged itself: Investigate AP DIS and YD DIS codes. If FD (fail) annunciates on the PFD: Investigate STEER code. If no problem is suspected (or if above codes are all zeros), go to step 5.0.
4.0	After replacing the suspect LRU, display the AVIONICS STATUS page again. Wait 5 minutes for the diagnostic system to stabilize. If NO FAULTS displays: Go to step 5.0 if no additional problems are suspected. Otherwise go to step 2.0. If the fault condition is not cleared or if a malfunction is still suspected: Record the displayed fault CODE(s). Refer to table 5-3 and investigate these codes. If another LRU is replaced, go to step 0.0. Otherwise go to level 2 troubleshooting.
5.0	No further troubleshooting is indicated.

5.7.2 Level 2 Troubleshooting

Level 2 troubleshooting consists of performing the LRU test procedures provided in tables 5-18 through 5-85; table 5-17 is an index for these tables. Each table provides a functional checkout procedure for one LRU. These tables are organized according to the ten avionics subsystems. Note that these tables can also be used as a customer acceptance test for each LRU; either a systems rig or an aircraft is required.

Some general hints and reminders are provided below.

a. The avionics system is very symmetrical. Many subsystems contain two identical units (ie, MSP mode select panels). Faults in symmetrical systems can be effectively isolated by swapping identical LRU's and seeing if the problem recurs.
b. The PWR modules (IAPS) power the diagnostic systems. If diagnostics do not appear functional, check that all PWR monitor lights are on.
c. Autopilot and flight director problems are best handled by using the FCS DIAGNOSTICS. Specific codes are available which represent the cause of an unexpected disengage, refusal to engage, and an FD flag. A built-in "plain English" summary of any displayed FCS diagnostic code is also available. Remember that these codes are not retained after the aircraft power is turned off.
d. A failed data bus may be caused by the transmitting LRU, the receiving LRU, or by a loose wire in a mating connector contact. Check a suspect bus for continuity, 2-wire activity, and isolation from ground potential. Typical bus levels (in V dc) are provided below.

ARINC 429 and ARINC 453

BUS LEVEL	HI	NULL	LO
A to B	+10	0	-10
A to gnd	+5	0	-5
B to gnd	-5	0	+5

RS-422

BUS LEVEL	HI	LO
A to B	+5	-5
A to gnd	+5	0
B to gnd	0	+5

e. Refer to the system schematics and connector pictorials provided in the theory of operation section of this manual. These diagrams show pin numbers and interconnections for each LRU, and are designed to be a troubleshooting (as well as a training) aid. These diagrams are especially useful when investigating fault codes on the AVIONICS STATUS and LRU FAULT HISTORY pages.
f. Refer to the operation section of this manual to verify proper control action and display response. This section is not intended for the pilot, but is meant to be used during flight-line troubleshooting.
g. The LRU DIAGNOSTIC DATA page displays diagnostic words currently received from each reporting LRU. Instructions are provided in this section of the manual to read and interpret these words. The diagnostic words provide specific insights about the internal health of a suspect unit, and can be very helpful in understanding a difficult problem.
h. The LRU FAULT HISTORY page may provide valuable clues about recurring or intermittent problems. Data from past flights is available for recall and analysis.

ADDENDUM 2

TO

STARSHIP 1 AVIONICS SYSTEM

SYSTEM MANUAL

PART NUMBER 523-0774076, DATED 14 JAN 1989

Insert this addendum sheet facing page 5-94 of the Maintenance Section of the manual

1	APPLY POWER. DELAY 5 MINUTES.
2	SELECT 'AVIONICS STATUS' PAGE ON MFD.
3	RESPOND TO EACH LINE ACCORDING TO THE STATUS MESSAGE. SEE TABLE 5-16.

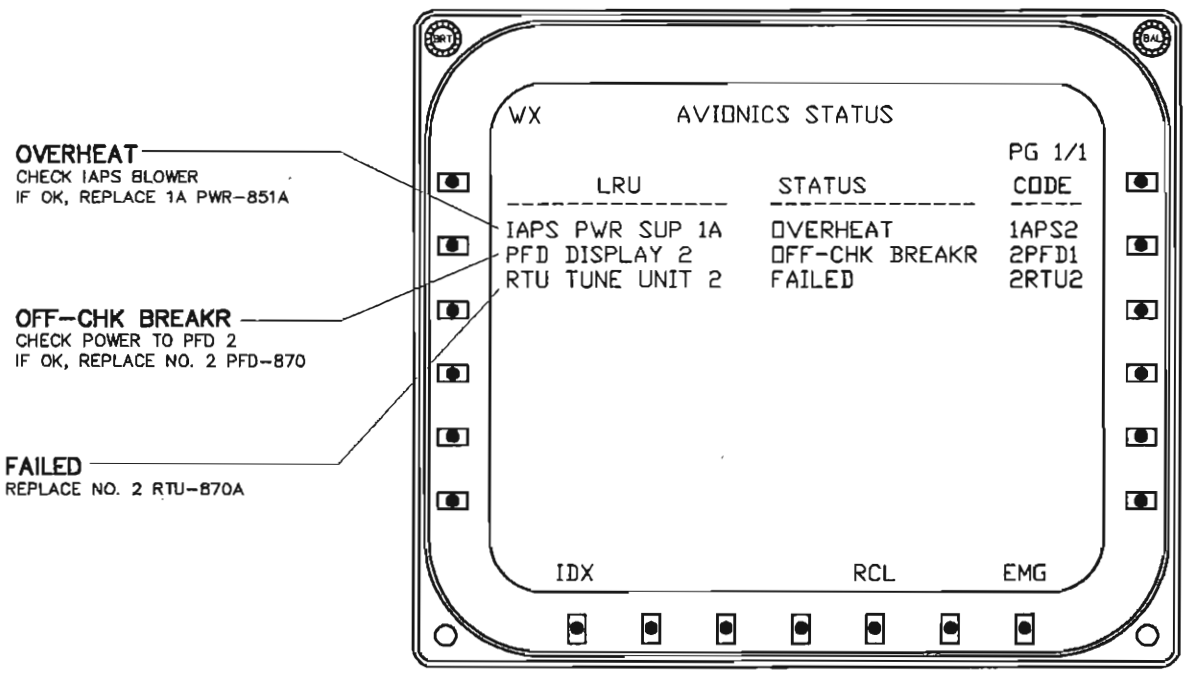

FAULTS DISPLAY ON THE AVIONICS STATUS PAGE 60 SECONDS AFTER THEY OCCUR.

CGO-0686-01-AC-D

LRU Fault Isolation
Figure 5-11

Table 5-17. Level 2 Troubleshooting Index.

LRU	TABLE	LRU	TABLE
IDS SYSTEM		FMS SYSTEM	
PFD 1	5-18	FMC-851A	5-55
ND 1	5-19	FMC-852A	5-56
PFD 2	5-20	CDC-850A	5-57
ND 2	5-21	CDU 1	5-58
ECD	5-22	CDU 2	5-59
MFD	5-23	CHP	5-60
SDD	5-24	AAP 1	5-61
SDU 1	5-25	AAP 2	5-62
SDU 2	5-26	DBU	5-63
IAPS SYSTEM		CS SYSTEM	
ICC	5-27	VHF 1	5-64
PWR 1A	5-28	VHF 2	5-65
PWR 2A	5-29	RTU 1	5-66
PWR 1B	5-30	RTU 2	5-67
PWR 2B	5-31	TDR 1	5-68
IOC 1A	5-32	TDR 2	5-69
IOC 2A	5-33	CAD 1	5-70
IOC 1B	5-34	CAD 2	5-71
IOC 2B	5-35		
		NS SYSTEM	
ADS SYSTEM		VIR 1	5-72
ADC 1 (and ADM 1)	5-36	VIR 2	5-73
ASI 1	5-37	DME 1	5-74
ALI 1	5-38	DME 2	5-75
ADC 2 (and ADM 2)	5-39	ADF 1	5-76
ASI 2	5-40	ADF 2	5-77
ALI 2	5-41	ANT-462A/B	5-78
		ALT (and ANT-52's)	5-79
AHS SYSTEM		RAC	5-80
AHC 1 (and ICU 1)	5-42	CMA (and VLF-ANT)	5-81
FDU 1	5-43		
AHC 2 (and ICU 2)	5-44	WXR SYSTEM	
FDU 2	5-45	RTA	5-82
FCS SYSTEM		ADAS SYSTEM	
FCC 1	5-46	EDC 1	5-83
MSP 1	5-47	EDC 2	5-84
FCC 2	5-48	DAU	5-85
MSP 2	5-49		
APP	5-50		
SVO (aileron)	5-51		
SVO (elevator)	5-52		
SVO (rudder)	5-53		
ATC	5-54		

Verify proper lighting and dim control for panel mounted units; specific instructions are not repeated in the test tables.

Table 5-18. PFD 1 Test Procedure.

STEP	PROCEDURE
	Note The two PFD's and the two ND's may be swapped with each other in any combination to verify aircraft wiring and to isolate a failed unit. Example: Put the PFD 1 in the ND 2 mount, and the PFD will now function as an ND.
1.0	Check the AVIONICS STATUS page and troubleshoot according to table 5-3.
2.0	If the display is blank, check the circuit breaker. Then swap the PFD 1 with the (operational) cross-side PFD or any ND. If the suspect unit display is still blank, replace that unit. If the unit now in the PFD 1 mount has a blank display, check the aircraft wiring.
3.0	Set on-side AHRS reversion switch to X-SIDE. Verify that XATT annunciates, and that the PFD now displays cross-side attitude. Set switch back to NORM.
4.0	Set on-side CDU reversion switch to X-SIDE. Verify that XCDU annunciates, and that the PFD is now controlled by the right CDU. Set switch back to NORM.
5.0	Set on-side reversion switch to CMPST UP. Verify that the PFD shows a combined PFD/ND display and that the ND is blank.
6.0	Select a variety of active courses (on the CDU) and verify that FMS data is white, on-side VOR/LOC data is green, and cross-side VOR/LOC data is yellow.
7.0	Select VOR 1 as the active bearing pointer source (on the CDU). Tune the VOR receiver to a local frequency. Verify proper bearing and compass indications.
8.0	Rotate the CHP HDG knob and verify that the heading bug responds.
9.0	Engage the autopilot. Verify that the command bars come into view, the AP arrow points to the coupled side, and that MSP mode selections annunciate properly. Disengage the autopilot.
10.0	Set on-side reversion switch to CMPST DN. Verify that the PFD blanks and that the ND shows a combined PFD/ND display. Then set the switch to NORM.

Table 5-19. ND 1 Test Procedure.

STEP	PROCEDURE
	Note The two PFD's and the two ND's may be swapped with each other in any combination to verify aircraft wiring and to isolate a failed unit. Example: Put the ND 1 in the PFD 2 mount, and the ND will now function as a PFD.
1.0	Check the AVIONICS STATUS page and troubleshoot according to table 5-3.
2.0	If the display is blank, check the circuit breaker. Then swap the ND 1 with the (operational) cross-side ND or any PFD. If the suspect unit display is still blank, replace that unit. If the unit now in the ND 1 mount has a blank display, check the aircraft wiring.
3.0	Alternately select HSI, MAP, and ARC formats (on the CDU) and verify the proper display on the ND.
4.0	Select STBY radar mode (on the CDU). Press the RDR key (on the CDU) to enable radar target display. Verify that the ND now displays a range arc, distance label, and radar mode lines.
5.0	Set on-side AHRS reversion switch to X-SIDE. Verify that XHDG annunciates, and that the ND now displays cross-side heading. Set switch back to NORM.
6.0	Set on-side CDU reversion switch to X-SIDE. Verify that XCDU annunciates, and that the ND is now controlled by the right CDU. Set switch back to NORM.
7.0	Set on-side reversion switch to CMPST DN. Verify that the ND shows a combined PFD/ND display and that the PFD is blank.
8.0	Select a variety of active courses (on the CDU) and verify that FMS data is white, on-side VOR/LOC data is green, and cross-side VOR/LOC data is yellow.
9.0	Select VOR 1 as the active bearing pointer source (on the CDU). Tune the VOR receiver to a local VOR frequency. Verify proper bearing and compass indications.
10.0	Rotate the CHP HDG knob and verify that the heading bug responds.
11.0	Engage the autopilot. Verify that the command bars come into view, the AP arrow points to the coupled side, and that MSP mode selections annunciate properly. Disengage the autopilot.
12.0	Set on-side reversion switch to CMPST UP. Verify that the ND blanks and that the PFD shows a combined PFD/ ND display. Then set the switch to NORM.

Table 5-20. PFD 2 Test Procedure.

STEP	PROCEDURE
	Note The two PFD's and the two ND's may be swapped with each other in any combination to verify aircraft wiring and to isolate a failed unit. Example: Put the PFD 2 in the ND 1 mount, and the PFD will now function as an ND.
1.0	Check the AVIONICS STATUS page and troubleshoot according to table 5-3.
2.0	If the display is blank, check the circuit breaker. Then swap the PFD 2 with the (operational) cross-side PFD or any ND. If the suspect unit display is still blank, replace that unit. If the unit now in the PFD 2 mount has a blank display, check the aircraft wiring.
3.0	Set on-side AHRS reversion switch to X-SIDE. Verify that XATT annunciates, and that the PFD now displays cross-side attitude. Set switch back to NORM.
4.0	Set on-side CDU reversion switch to X-SIDE. Verify that XCDU annunciates, and that the PFD is now controlled by the left CDU. Set switch back to NORM.
5.0	Set on-side reversion switch to CMPST UP. Verify that the PFD shows a combined PFD/ND display and that the ND is blank.
6.0	Select a variety of active courses (on the CDU) and verify that FMS data is white, on-side VOR/LOC data is green, and cross-side VOR/LOC data is yellow.
7.0	Select VOR 2 as the active bearing pointer source (on the CDU). Tune the VOR receiver to a local frequency. Verify proper bearing and compass indications.
8.0	Rotate the CHP HDG knob and verify that the heading bug responds.
9.0	Engage the autopilot. Verify that the command bars come into view, the AP arrow points to the coupled side, and that MSP mode selections annunciate properly. Disengage the autopilot.
10.0	Set on-side reversion switch to CMPST DN. Verify that the PFD blanks and that the ND shows a combined PFD/ND display. Then set the switch to NORM.

Table 5-21. ND 2 Test Procedure.

STEP	PROCEDURE
	Note The two PFD's and the two ND's may be swapped with each other in any combination to verify aircraft wiring and to isolate a failed unit. Example: Put the ND 2 in the PFD 1 mount, and the ND will now function as a PFD.
1.0	Check the AVIONICS STATUS page and troubleshoot according to table 5-3.
2.0	If the display is blank, check the circuit breaker. Then swap the ND 2 with the (operational) cross-side ND or any PFD. If the suspect unit display is still blank, replace that unit. If the unit now in the ND 2 mount has a blank display, check the aircraft wiring.
3.0	Alternately select HSI, MAP, and ARC formats (on the CDU) and verify the proper display on the ND.
4.0	Select STBY radar mode (on the CDU). Press the RDR key (on the CDU) to enable radar target display. Verify that the ND now displays a range arc, distance label, and radar mode lines.
5.0	Set on-side AHRS reversion switch to X-SIDE. Verify that XHDG annunciates, and that the ND now displays cross-side heading. Set switch back to NORM.
6.0	Set on-side CDU reversion switch to X-SIDE. Verify that XCDU annunciates, and that the ND is now controlled by the left CDU. Set switch back to NORM.
7.0	Set on-side reversion switch to CMPST DN. Verify that the ND shows a combined PFD/ND display and that the PFD is blank.
8.0	Select a variety of active courses (on the CDU) and verify that FMS data is white, on-side VOR/LOC data is green, and cross-side VOR/LOC data is yellow.
9.0	Select VOR 2 as the active bearing pointer source (on the CDU). Tune the VOR receiver to a local VOR frequency. Verify proper bearing and compass indications.
10.0	Rotate the CHP HDG knob and verify that the heading bug responds.
11.0	Engage the autopilot. Verify that the command bars come into view, the AP arrow points to the coupled side, and that MSP mode selections annunciate properly. Disengage the autopilot.
12.0	Set on-side reversion switch to CMPST UP. Verify that the ND blanks and that the PFD shows a combined PFD/ND display. Then set the switch to NORM.

Table 5-22. ECD Test Procedure.

STEP	PROCEDURE
	Note The ECD and the MFD may be swapped with each other to verify aircraft wiring and to isolate a failed unit. Each unit will display information according to its mount, even though line key selection is not compatible.
1.0	Check the AVIONICS STATUS page and troubleshoot according to table 5-3.
2.0	If the display is blank, check the circuit breaker. Then swap the ECD with the (operational) MFD. If the suspect unit display is still blank, replace that unit. If the unit now in the ECD mount has a blank display, check the aircraft wiring.
	Note The ECD display shows left and right engine information that is normally read on conventional gauges. The EDC engine data concentrators provide engine data to the DAU data acquisition unit. The DAU provides left and right engine data to the ECD display.
3.0	Verify that the gauge displays appear normal. It may be necessary to start the engines or to use the EDC simulator (refer to table 5-1). Information on this simulator will be provided when available.
4.0	Press the OIL DSPL line key to alternately select and deselect the oil gauge display.
5.0	If more that one page of CAS messages is displayed on the ECD, press the up and down CAS line keys to display the previous/next page of messages.
6.0	Set the EICAS reversion switch to REV. Verify that the ECD blanks and that the MFD displays engine data. Set the switch to NORM.

Table 5-23. MFD Test Procedure.

STEP	PROCEDURE
	Note The MFD and the ECD may be swapped with each other to verify aircraft wiring and to isolate a failed unit. Each unit will display information according to its mount, even though line key selection is not compatible.
1.0	Check the AVIONICS STATUS page and troubleshoot according to table 5-3.
2.0	If the display is blank, check the circuit breaker. Then swap the MFD with the (operational) ECD. If the suspect unit display is still blank, replace that unit. If the unit now in the MFD mount has a blank display, check the aircraft wiring.
3.0	Press the IDX line key to display the index page. Then press the NORMAL PROCEDURES line key and display a checklist. Verify that the LINE ADV and PAGE ADV buttons on the control wheels function properly. Press the LINE ADV button to check the cursored line; press the PAGE ADV button to exit the checklist and select the next checklist on the NORMAL PROCEDURE menu.
4.0	A checklist should still be displayed on the MFD. Verify that the CHP joystick functions normally. Move the joystick up to select the previous checklist page, down to select the next checklist page, right to exit the checklist and select the next one on the menu, and left to exit the checklist and select the previous one on the menu. Then press the IDX line key.
5.0	Select STBY radar mode (on the CDU). Press the RADAR line key to select the radar display. Verify that the MFD now displays range rings, distance labels, and 30 angle markings. Then press the IDX line key.
6.0	Set the EICAS reversion switch to REV. Verify that the MFD now displays engine data and that the ECD blanks. Set the switch to NORM.
7.0	Select a variety of MFD displays, and check all line keys for sticky or improper operation.

Table 5-24. SDD Test Procedure.

STEP	PROCEDURE
1.0	Check the AVIONICS STATUS page and troubleshoot according to table 5-3. Note that the SDD does not report to the AVIONICS STATUS page, but any faults detected by these diagnostics should be resolved before beginning this procedure.
2.0	Check the SDU displays. If either SDU is not receiving data from the SDD, the display blanks and "SDD" annunciates. If this happens, check the circuit breakers and verify that power is applied to SDD pins P1-57 and P2-4. If power is present, check the SDD TO SDU-1 bus and the SDD TO SDU-2 bus outputs from the SDD. If no activity is detected on the SDD outputs, replace the SDD.
3.0	Further testing of the SDD may be indirectly accomplished by performing the SDU test procedures. If each SDU tests normal, then the SDD unit strap pins are wired properly and each corresponding input bus is active. An alternate way to complete SDD testing is provided in steps 4.0 and 5.0. **Note** The SDD unit strap pins are wired according to the NAV sensors which are installed on the aircraft. If a type of sensor is installed and provides an input bus to the SDD, that strap pin should be grounded. If a strap opens, the corresponding input bus is ignored even if it is present and valid.
4.0	Verify that the following SDD pins are strapped to ground: P1-44 (ADF 1) — P2-17 (ADF 2, optional) P1-43 (DME 1) — P2-18 (DME 2) P1-40 (VIR 1) — P2-21 (VIR 2) P1-41 (CMA 1) P1-42 (LB GP bus) — P2-19 (RB GP bus)
5.0	Verify activity on the following input buses: P1-5/6 (L-ADF-2) — P2-56/55 (R-ADF-2, optional) P1-9/10 (L-DME-2) — P2-52/51 (R-DME-2) P1-21/22 (L-VIR-2) — P2-40/39 (R-VIR-2) P1-17/18 (L-VLF-2) P1-13/14 (LB-GP BUS 2) — P2-48/47 (RB-GP BUS 2) P1-1/2 (R-AHC-3) — P2-60/59 (L-AHC-3)

Table 5-25. SDU 1 Test Procedure.

STEP	PROCEDURE
	Note If two SDU's are installed in the aircraft, they may be swapped with each other to verify aircraft wiring and to isolate a failed unit.
1.0	Check the AVIONICS STATUS page and troubleshoot according to table 5-3. Note that the SDU does not report to the AVIONICS STATUS page, but any faults detected by these diagnostics should be resolved before beginning this procedure.
2.0	If two SDU's are installed and the SDU 1 display is blank, check the circuit breaker. Then swap the SDU 1 with the (operational) SDU 2. If the suspect unit display is still blank, replace that unit. If the unit now in the SDU 1 mount has a blank display, check the aircraft wiring. Go to step 4.0.
3.0	If the display is blank, check the circuit breaker and verify that power is applied to SDU pin P1-11. If power is present, check the aircraft wiring. If wiring is normal, replace the SDU.
4.0	If the display is blank except for an "SDD" annunciation, test the SDD.
5.0	Check the voltage at SDU pin P1-8 (SDU fail). Do not open the connection to the SDD; pullup resistor is located in the SDD. If an open or greater than 9 V dc is measured, replace the SDU.
6.0	Rotate the FORMAT knob and verify that RMI, VLF, VOR 1 (or LOC 1), DME, and VOR 2 (or LOC 2) formats select and annunciate.
7.0	Select RMI format. Verify same compass reading that is indicated on the cross-side (right) ND. If not, check the R-AHC-3 input to the SDD.
8.0	Rotate the lower left (single-bar bearing pointer) knob and verify that VOR 1 (or LOC 1), ADF (or ADF 1), and FMS alternately annunciate near the knob.
9.0	Rotate the lower right (dual-bar bearing pointer) knob and verify that VOR 2 (or LOC 2), ADF (or ADF 2), and FMS alternately annunciate.
10.0	Select VOR 1 as the single-bar bearing pointer source and VOR 2 as the dual-bar source. Tune both VOR receivers to a local VOR frequency and verify proper bearing indications. If not, check the L-VIR-2 and R-VIR-2 inputs to the SDD.
11.0	Select ADF (or ADF 1) as the single-bar bearing pointer source and ADF (or ADF 2) as the dual-bar source. Tune both ADF receivers (if two are installed) to a local AM frequency and verify proper bearing indication. If not, check the L-ADF-2 and R-ADF-2 inputs to the SDD.
12.0	Select FMS as the single-bar bearing pointer source. Select an FMS flight plan (on the CDU) and verify proper bearing indication to the next waypoint. If not, check the LB-GP BUS 2 input to the SDD. Note that the RB-GP BUS 2 input is reserved for a second FMS.
13.0	Select VLF format and verify that VLF format annunciation is not "crossed out." If VLF annunciation is crossed out, check the L-VLF-2 input to the SDD.
14.0	Select DME format and verify that two columns of distance data are displayed. If not, check the L-DME-2 and R-DME-2 inputs to the SDD.

Table 5-26. SDU 2 Test Procedure.

STEP	PROCEDURE
	Note The number 2 SDU is optional. If two SDU's are installed, they may be swapped with each other to verify aircraft wiring and to isolate a failed unit.
1.0	Check the AVIONICS STATUS page and troubleshoot according to table 5-3. Note that the SDU does not report to the AVIONICS STATUS page, but any faults detected by these diagnostics should be resolved before beginning this procedure.
2.0	If the display is blank, check the circuit breaker and verify that power is applied to SDU pin P1-11. If power is present, swap the SDU 2 with the (operational) SDU 1. If the suspect unit display is still blank, replace that unit.
3.0	If the display is blank except for an "SDD" annunciation, test the SDD.
4.0	Check the voltage at SDU pin P1-8 (SDU fail). Do not open the connection to the SDD; pullup resistor is located in the SDD. If an open or greater than 9 V dc is measured, replace the SDU.
5.0	Rotate the FORMAT knob and verify that RMI, VLF, VOR 1 (or LOC 1), DME, and VOR 2 (or LOC 2) formats select and annunciate.
6.0	Select RMI format. Verify same compass reading that is indicated on the cross-side (left) ND. If not, check the L-AHC-3 input to the SDD.
7.0	Rotate the lower left (single-bar bearing pointer) knob and verify that VOR 1 (or LOC 1), ADF (or ADF 1), and FMS alternately annunciate near the knob.
8.0	Rotate the lower right (dual-bar bearing pointer) knob and verify that VOR 2 (or LOC 2), ADF (or ADF 2), and FMS alternately annunciate.
9.0	Select VOR 1 as the single-bar bearing pointer source and VOR 2 as the dual-bar source. Tune both VOR receivers to a local VOR frequency and verify proper bearing indications. If not, check the L-VIR-2 and R-VIR-2 inputs to the SDD.
10.0	Select ADF (or ADF 1) as the single-bar bearing pointer source and ADF (or ADF 2) as the dual-bar source. Tune both ADF receivers (if two are installed) to a local AM frequency and verify proper bearing indication. If not, check the L-ADF-2 and R-ADF-2 inputs to the SDD.
11.0	Select FMS as the single-bar bearing pointer source. Select an FMS flight plan (on the CDU) and verify proper bearing indication to the next waypoint. If not, check the LB-GP BUS 2 input to the SDD. Note that the RB-GP BUS 2 input is reserved for a second FMS.
12.0	Select VLF format and verify that VLF format annunciation is not "crossed out." If VLF annunciation is crossed out, check the L-VLF-2 input to the SDD.
13.0	Select DME format and verify that two columns of distance data are displayed. If not, check the L-DME-2 and R-DME-2 inputs to the SDD.

Table 5-27. ICC Test Procedure.

STEP	PROCEDURE
	Note The ICC card cage has a very low failure rate. Most IAPS fault isolation is accomplished by swapping modules. If the ICC itself is at fault, the problem is likely a bent pin or a failed component in the I/O protection circuit. When testing or troubleshooting within the ICC, always watch for any loose connection, damaged connector, or improperly seated module.
1.0	Check the AVIONICS STATUS page and troubleshoot according to table 5-3. Note that the ICC does not report to the AVIONICS STATUS page, but if no faults are detected by these diagnostics, then the ICC is operational.
2.0	If the AVIONICS STATUS page indicates any problem with the PWR, IOC, FCC, FMC, or CDC modules, then troubleshoot these faults first. Note that the ICC is functionally divided into four quadrants as defined below.

ICC QUADRANT:	1A	2A	1B	2B
RESIDENT LRU:	PWR 1A IOC 1A FCC 1	PWR 2A IOC 2A FCC 2	PWR 1B IOC 1B FMC-851A FMC-852A	PWR 2B IOC 2B CDC-850A
ICC POWER:	P7-1,2	P8-1,2	P7-4,5	P8-4,5

3.0	If all internal LRU's pass their individual test procedures and power is applied to the ICC, then recheck the AVIONICS STATUS page. If an internal LRU is still reported as failed, then troubleshoot the ICC. For example: If an IOC 1A problem is reported, but this module functions normally in the IOC 1B slot, then the ICC probably has a broken connection in the 1A quadrant.
4.0	To troubleshoot the ICC, refer to the IAPS system schematic (for pin numbers) and carefully inspect the problem area. Check for proper connections (refer to note on this page), and check that high/low data bus pins are not shorted to ground. If an I/O protection problem is suspected, refer to the IAPS system schematic for pin numbers of the suspected circuit. The protection circuits consist of zener diodes (to ground) on the data bus pins, and varistors (to ground) on the power/motor pins.

Table 5-28. PWR 1A Test Procedure.

STEP	PROCEDURE
	Note The four PWR's may be swapped with each other in any combination to verify internal ICC connections, to isolate a failed unit, and to provide a known-good power source to resident modules in that quadrant of the IAPS.
1.0	Check the AVIONICS STATUS page and troubleshoot according to table 5-3. If no faults are detected by these diagnostics, then PWR 1A is operational.
	Note PWR 1A supplies primary power to the IOC 1A, FCC 1, and MSP 1.
2.0	If the AVIONICS STATUS page indicates a PWR 1A overheat problem, then check the IAPS cooling system. If no air is circulating, check that the air plenum is properly attached to the IAPS. If an AVIONIC AIR FAIL message is displayed on the EICAS, switch on the avionics alternate blower. If air is now circulating in the IAPS, replace the primary blower.
3.0	If the AVIONICS STATUS page indicates a PWR 1A failure, then check the circuit breaker and verify that all LED's on the PWR module are lit. If not lit, verify that power is applied to ICC pins P7-1 and P7-2.
4.0	If the AVIONICS STATUS page indicates a MODE SEL PANEL 1 fault, check for +5 V dc on ICC pin P1-9/8 (MSP ISOL 1A). If power is not present, go to step 5.0. Check for +5 V dc on MSP 1 pin P1-13/25 (+5 V ISOL). If power is not present, check the aircraft wiring. If power is present, test the MSP 1.
	Note When swapping PWR's, remember that the 1B module powers the diagnostic system.
5.0	Recheck the AVIONICS STATUS page. If any PWR 1A faults are still reported, then swap the PWR 1A with an operational PWR module (any PWR not listed on the AVIONICS STATUS page).
6.0	If the faults follow the suspect PWR module, replace that PWR. If the same faults are still detected in the 1A quadrant, then test either the IOC 1A/1B (overheat status) or the ICC (failed status).

Table 5-29. PWR 2A Test Procedure.

STEP	PROCEDURE
	Note The four PWR's may be swapped with each other in any combination to verify internal ICC connections, to isolate a failed unit, and to provide a known-good power source to resident modules in that quadrant of the IAPS.
1.0	Check the AVIONICS STATUS page and troubleshoot according to table 5-3. If no faults are detected by these diagnostics, then PWR 2A is operational.
	Note PWR 2A supplies primary power to the IOC 2A, FCC 2, and MSP 2.
2.0	If the AVIONICS STATUS page indicates a PWR 2A overheat problem, then check the IAPS cooling system. If no air is circulating, check that the air plenum is properly attached to the IAPS. If an AVIONIC AIR FAIL message is displayed on the EICAS, switch on the avionics alternate blower. If air is now circulating in the IAPS, replace the primary blower.
3.0	If the AVIONICS STATUS page indicates a PWR 2A failure, then check the circuit breaker and verify that all LED's on the PWR module are lit. If not lit, verify that power is applied to ICC pins P8-1 and P8-2.
4.0	If the AVIONICS STATUS page indicates a MODE SEL PANEL 2 fault, check for +5 V dc on ICC pin P4-9/8 (MSP ISOL 2A). If power is not present, go to step 5.0. Check for +5 V dc on MSP 2 pin P1-13/25 (+5 V ISOL). If power is not present, check the aircraft wiring. If power is present, test the MSP 2.
	Note When swapping PWR's, remember that the 1B module powers the diagnostic system.
5.0	Recheck the AVIONICS STATUS page. If any PWR 2A faults are still reported, then swap the PWR 2A with an operational PWR module (any PWR not listed on the AVIONICS STATUS page).
6.0	If the faults follow the suspect PWR module, replace that PWR. If the same faults are still detected in the 2A quadrant, then test either the IOC 2A/2B (overheat status) or the ICC (failed status).

Table 5-30. PWR 1B Test Procedure.

STEP	PROCEDURE
	Note The four PWR's may be swapped with each other in any combination to verify internal ICC connections, to isolate a failed unit, and to provide a known-good power source to resident modules in that quadrant of the IAPS.
1.0	Check the AVIONICS STATUS page and troubleshoot according to table 5-3. If no faults are detected by these diagnostics, then PWR 1B is operational.
	Note PWR 1B supplies primary power to the IOC 1B, FMC-851A, FMC-852A, and DBU. If this PWR fails, so do the FMS diagnostics. If no FMS diagnostics operate, suspect either the PWR 1B or the FMC-851A.
2.0	If the AVIONICS STATUS page indicates a PWR 1B overheat problem, then check the IAPS cooling system. If no air is circulating, check that the air plenum is properly attached to the IAPS. If an AVIONIC AIR FAIL message is displayed on the EICAS, switch on the avionics alternate blower. If air is now circulating in the IAPS, replace the primary blower.
3.0	If the AVIONICS STATUS page indicates a PWR 1B failure, then check the circuit breaker and verify that all LED's on the PWR module are lit. If not lit, verify that power is applied to ICC pins P7-4 and P7-5.
	Note When swapping PWR's, remember that the 1B module powers the diagnostic system.
4.0	Recheck the AVIONICS STATUS page. If any PWR 1B faults are still reported, then swap the PWR 1B with an operational PWR module (any PWR not listed on the AVIONICS STATUS page).
5.0	If the faults follow the suspect PWR module, replace that PWR. If the same faults are still detected in the 1B quadrant, then test either the IOC 1A/1B (overheat status) or the ICC (failed status).
6.0	If a DBU problem is suspected, check for +5 V dc on ICC pin P1-5/6 (DBU ISOL 1B). If power is not present, swap the PWR 1B with an operational PWR module and recheck the voltage levels. If power is now present, replace the suspect PWR module. Check for +5 V dc on DBU pin P1-3/4 (+5 V ISOL). If power is not present, check the aircraft wiring. If power is present, test the DBU.

Table 5-31. PWR 2B Test Procedure.

STEP	PROCEDURE
	Note The four PWR's may be swapped with each other in any combination to verify internal ICC connections, to isolate a failed unit, and to provide a known-good power source to resident modules in that quadrant of the IAPS.
1.0	Check the AVIONICS STATUS page and troubleshoot according to table 5-3. If no faults are detected by these diagnostics, then PWR 2B is operational.
	Note PWR 2B supplies primary power to the IOC 2B and the CDC-850A.
2.0	If the AVIONICS STATUS page indicates a PWR 2B overheat problem, then check the IAPS cooling system. If no air is circulating, check that the air plenum is properly attached to the IAPS. If an AVIONIC AIR FAIL message is displayed on the EICAS, switch on the avionics alternate blower. If air is now circulating in the IAPS, replace the primary blower.
3.0	If the AVIONICS STATUS page indicates a PWR 2B failure, then check the circuit breaker and verify that all LED's on the PWR module are lit. If not lit, verify that power is applied to ICC pins P8-4 and P8-5.
	Note When swapping PWR's, remember that the 1B module powers the diagnostic system.
4.0	Recheck the AVIONICS STATUS page. If any PWR 2B faults are still reported, then swap the PWR 2B with an operational PWR module (any PWR not listed on the AVIONICS STATUS page).
5.0	If the faults follow the suspect PWR module, replace that PWR. If the same faults are still detected in the 2B quadrant, then test either the IOC 2A/2B (overheat status) or the ICC (failed status).

Table 5-32. IOC 1A Test Procedure.

STEP	PROCEDURE
	Note The four IOC's may be swapped with each other in any combination to verify internal ICC connections and to isolate a failed unit.
1.0	Check the AVIONICS STATUS page and troubleshoot according to table 5-3. If no faults are detected by these diagnostics, then the IOC 1A is operational.
2.0	If the AVIONICS STATUS page indicates a PWR 1A failure, then test the PWR 1A. The IOC 1A diagnostics are disabled when this power module fails.
3.0	If the AVIONICS STATUS page indicates any IOC 1A failure, then swap the IOC 1A with an operational IOC module (any IOC not listed on the AVIONICS STATUS page).
4.0	If the faults follow the suspect IOC module, replace that IOC. If the same faults are still detected in the 1A quadrant, then test the ICC.
5.0	If the AVIONICS STATUS page indicates a PWR 1A or PWR 1B overheat fault that is not cleared by testing (swapping) PWR's, then the problem may be a stuck IOC input. Swap the IOC 1A with an operational IOC. If the fault clears, then replace the suspect IOC. Otherwise, test the ICC.
6.0	The IOC 1A and IOC 1B read left-side program options from the J13 configuration strapping plug in the ICC. If a strapping error is suspected, display the STRAPPING OPTION word on the LRU DIAGNOSTIC DATA page. Refer to table 5-5 and verify proper strapping.

Table 5-33. IOC 2A Test Procedure.

STEP	PROCEDURE
	Note The four IOC's may be swapped with each other in any combination to verify internal ICC connections and to isolate a failed unit.
1.0	Check the AVIONICS STATUS page and troubleshoot according to table 5-3. If no faults are detected by these diagnostics, then the IOC 2A is operational.
2.0	If the AVIONICS STATUS page indicates a PWR 2A failure, then test the PWR 2A. The IOC 2A diagnostics are disabled when this power module fails.
3.0	If the AVIONICS STATUS page indicates any IOC 2A failure, then swap the IOC 2A with an operational IOC module (any IOC not listed on the AVIONICS STATUS page).
4.0	If the faults follow the suspect IOC module, replace that IOC. If the same faults are still detected in the 2A quadrant, then test the ICC.
5.0	If the AVIONICS STATUS page indicates a PWR 2A or PWR 2B overheat fault that is not cleared by testing (swapping) PWR's, then the problem may be a stuck IOC input. Swap the IOC 2A with an operational IOC. If the fault clears, then replace the suspect IOC. Otherwise, test the ICC.
6.0	The IOC 2A and IOC 2B read right-side program options from the J14 configuration strapping plug in the ICC. If a strapping error is suspected, display the STRAPPING OPTION word on the LRU DIAGNOSTIC DATA page. Refer to table 5-5 and verify proper strapping.

Table 5-34. IOC 1B Test Procedure.

STEP	PROCEDURE
	Note The four IOC's may be swapped with each other in any combination to verify internal ICC connections and to isolate a failed unit.
1.0	Check the AVIONICS STATUS page and troubleshoot according to table 5-3. If no faults are detected by these diagnostics, then the IOC 1B is operational.
2.0	If the AVIONICS STATUS page indicates a PWR 1B failure, then test the PWR 1B. The IOC 1B diagnostics are disabled when this power module fails.
3.0	If the AVIONICS STATUS page indicates any IOC 1B failure, then swap the IOC 1B with an operational IOC module (any IOC not listed on the AVIONICS STATUS page).
4.0	If the faults follow the suspect IOC module, replace that IOC. If the same faults are still detected in the 1B quadrant, then test the ICC.
5.0	If the AVIONICS STATUS page indicates a PWR 1A or PWR 1B overheat fault that is not cleared by testing (swapping) PWR's, then the problem may be a stuck IOC input. Swap the IOC 1B with an operational IOC. If the fault clears, then replace the suspect IOC. Otherwise, test the ICC.
6.0	The IOC 1A and IOC 1B read left-side program options from the J13 configuration strapping plug in the ICC. If a strapping error is suspected, display the STRAPPING OPTION word on the LRU DIAGNOSTIC DATA page. Refer to table 5-5 and verify proper strapping.

Table 5-35. IOC 2B Test Procedure.

STEP	PROCEDURE
	Note The four IOC's may be swapped with each other in any combination to verify internal ICC connections and to isolate a failed unit.
1.0	Check the AVIONICS STATUS page and troubleshoot according to table 5-3. If no faults are detected by these diagnostics, then the IOC 2B is operational.
2.0	If the AVIONICS STATUS page indicates a PWR 2B failure, then test the PWR 2B. The IOC 2B diagnostics are disabled when this power module fails.
3.0	If the AVIONICS STATUS page indicates any IOC 2B failure, then swap the IOC 2B with an operational IOC module (any IOC not listed on the AVIONICS STATUS page).
4.0	If the faults follow the suspect IOC module, replace that IOC. If the same faults are still detected in the 2B quadrant, then test the ICC.
5.0	If the AVIONICS STATUS page indicates a PWR 2A or PWR 2B overheat fault that is not cleared by testing (swapping) PWR's, then the problem may be a stuck IOC input. Swap the IOC 2B with an operational IOC. If the fault clears, then replace the suspect IOC. Otherwise, test the ICC.
6.0	The IOC 2A and IOC 2B read right-side program options from the J14 configuration strapping plug in the ICC. If a strapping error is suspected, display the STRAPPING OPTION word on the LRU DIAGNOSTIC DATA page. Refer to table 5-5 and verify proper strapping.

Table 5-36. ADC 1 (and ADM 1) Test Procedure.

STEP	PROCEDURE
	Note The two ADC's may be swapped with each other to verify aircraft wiring and to isolate a failed unit. The two ADM's may be swapped to isolate a failed module. Note that an aircraft static check must be performed if pitot/static lines are removed from the computer.
1.0	Check the AVIONICS STATUS page and troubleshoot according to table 5-3.
2.0	Check for a red "ADC" fail annunciation on the ALI or ASI. If present, check the L-ADC-3 bus to the indicators. If normal, replace the ADC.
3.0	Momentarily press the TEST button on the ADC front panel. After a few seconds either the FAULT or the VALID lamp (near the button) will light. If FAULT lights, then replace the ADC.
4.0	Display the LRU DIAGNOSTIC DATA page showing the AIR DATA CMPT 1 word. Refer to table 5-5. If bit 25 or 26 is set, replace the ADM module. If bit 22 is set, test the ASI. If bit 23 is set, test the ALI.
	Note The following steps may fail if the ADC, ALI, or ASI has a defective receiver or transmitter. The best way to isolate the failed LRU is to swap like units; the problem will follow the failed LRU.
5.0	Rotate the vertical speed reference knob on the ALI and verify that the VS bug responds. If not, ensure that the mating connector is installed properly. Check the L-ALI OUT and the L-ADC-3 buses; then test the ALI.
6.0	Rotate the IAS reference knob on the ASI and verify that the IAS bug responds. If not, ensure that the mating connector is installed properly. Check the wiring between the ASI and the ALI; then test the ASI.
7.0	Rotate the ALT SEL knob on the ALI and verify that the altitude preselect display on both ALI's responds. Repeat this step using the ALT SEL knob on the cross-side ALI, and verify that both displays respond. If not, test the ADC 2. If the ADC 2 tests normal, check the XTLK buses between the computers.
8.0	If an air intake port or temperature probe problem is suspected, then inspect as required. Combined pitot/static input ports are located on both sides of the aircraft near the radome. A single temperature probe is located on the pilot side of the aircraft, near the front wheel well.
9.0	If a standby power problem is suspected, pull the circuit breaker to remove primary power from ADC pins P3-51 and P3-52. Standby power should still be applied to P3-48. The ADC should function normally.
10.0	If the IAS relay outputs to the trim system are suspect, refer to the ADC system schematic and verify aircraft wiring. The ADC should trip one relay at 150 knots and the other at 200 knots IAS.

Table 5-37. ASI 1 Test Procedure.

STEP	PROCEDURE
	Note The two ASI's may be swapped with each other to verify aircraft wiring and to isolate a failed unit.
1.0	Check the AVIONICS STATUS page and troubleshoot according to table 5-3.
2.0	If the display is blank, check the circuit breaker. Then swap the ASI 1 with the (operational) ASI 2. If the suspect unit display is still blank, replace that unit. If the unit now in the ASI 1 mount has a blank display, check the aircraft wiring.
	Note The following steps may fail if the ADC, ALI, or ASI has a defective receiver or transmitter. The best way to isolate the failed LRU is to swap like units; the problem will follow the failed LRU.
3.0	Rotate the IAS reference knob and verify that the IAS bug responds. If not, ensure that the mating connector is installed properly. Then, swap the ASI 1 with the (operational) ASI 2. Repeat this step. If the suspect unit still does not function, replace that unit. If the unit now in the ASI 1 mount no longer functions, check the ASI/ALI wiring and the L-ADC-3 bus wiring. If wiring is normal, test the ALI and ADC.
4.0	Push the IAS reference knob and verify that the IAS bug and reference displays alternately select and deselect.
5.0	Push the OAT ISA button once to display the OAT temperature, and then again to display the ISA temperature. After 5 seconds, IOAT temperature automatically displays.

Table 5-38. ALI 1 Test Procedure.

STEP	PROCEDURE
	Note The two ALI's may be swapped with each other to verify aircraft wiring and to isolate a failed unit.
1.0	Check the AVIONICS STATUS page and troubleshoot according to table 5-3.
2.0	If the display is blank, check the circuit breaker. Then swap the ALI 1 with the (operational) ALI 2. If the suspect unit display is still blank, replace that unit. If the unit now in the ALI 1 mount has a blank display, check the aircraft wiring.
	Note The following steps may fail if the ADC, ALI, or ASI has a defective receiver or transmitter. The best way to isolate the failed LRU is to swap like units; the problem will follow the failed LRU.
3.0	Rotate the VS reference knob and verify that the VS bug responds. If not, ensure that the mating connector is installed properly. Then, swap the ALI 1 with the (operational) ALI 2. Repeat this step. If the suspect unit still does not function, replace that unit. If the unit now in the ALI 1 mount no longer functions, check the L-ALI OUT bus wiring and the L-ADC-3 bus wiring. If wiring is normal, test the ADC.
4.0	Push the VS reference knob and verify that the VS bug and reference displays alternately select and deselect.
5.0	Rotate the BARO knob and verify that the barometric display responds. Push the BARO knob and verify that the barometric display changes to 29.92 (inches of mercury) or 1013 (millibars).
6.0	Rotate the ALT SEL knob and verify that the altitude preselect display responds. Push this knob to cancel altitude alerts or to test the aural warning.
7.0	Rotate the IAS reference knob (on the ASI 1) and verify that the IAS bug responds. If not, test the ASI and verify ASI/ALI wiring.
8.0	Set the BARO switch (on side reversionary panel) to MB. Push the BARO knob (on the ALI) and verify that the barometric display is 1013. Set the BARO switch to INCHES and verify that the display changes to 29.92.
9.0	If the FL 180 alert function is suspect, set the FL 180 switch (on side reversionary panel) to ALERT. The ALI barometric display is now enabled to flash at 18 000 feet altitude. This alert is disabled when the FL 180 switch is set to DISABLE.
10.0	If the overspeed warning function is suspect, push the remote VMO/MMO switch to test the aural overspeed warning.

Table 5-39. ADC 2 (and ADM 2) Test Procedure.

STEP	PROCEDURE
	Note The two ADC's may be swapped with each other to verify aircraft wiring and to isolate a failed unit. The two ADM's may be swapped to isolate a failed module. Note that an aircraft static check must be performed if pitot/static lines are removed from the computer.
1.0	Check the AVIONICS STATUS page and troubleshoot according to table 5-3.
2.0	Check for a red "ADC" fail annunciation on the ALI or ASI. If present, check the R-ADC-3 bus to the indicators. If normal, replace the ADC.
3.0	Momentarily press the TEST button on the ADC front panel. After a few seconds either the FAULT or the VALID lamp (near the button) will light. If FAULT lights, then replace the ADC.
4.0	Display the LRU DIAGNOSTIC DATA page showing the AIR DATA CMPT 2 word. Refer to table 5-5. If bit 25 or 26 is set, replace the ADM module. If bit 22 is set, test the ASI. If bit 23 is set, test the ALI.
	Note The following steps may fail if the ADC, ALI, or ASI has a defective receiver or transmitter. The best way to isolate the failed LRU is to swap like units; the problem will follow the failed LRU.
5.0	Rotate the vertical speed reference knob on the ALI and verify that the VS bug responds. If not, ensure that the mating connector is installed properly. Check the R-ALI OUT and the R-ADC-3 buses; then test the ALI.
6.0	Rotate the IAS reference knob on the ASI and verify that the IAS bug responds. If not, ensure that the mating connector is installed properly. Check the wiring between the ASI and the ALI; then test the ASI.
7.0	Rotate the ALT SEL knob on the ALI and verify that the altitude preselect display on both ALI's responds. Repeat this step using the ALT SEL knob on the cross-side ALI, and verify that both displays respond. If not, test the ADC 1. If the ADC 1 tests normal, check the XTLK buses between the computers.
8.0	If an air intake port or temperature probe problem is suspected, then inspect as required. Combined pitot/static input ports are located on both sides of the aircraft near the radome. A single temperature probe is located on the pilot side of the aircraft, near the front wheel well.
9.0	If a standby power problem is suspected, pull the circuit breaker to remove primary power from ADC pins P3-51 and P3-52. Standby power should still be applied to P3-48. The ADC should function normally.

Table 5-40. ASI 2 Test Procedure.

STEP	PROCEDURE
	Note The two ASI's may be swapped with each other to verify aircraft wiring and to isolate a failed unit.
1.0	Check the AVIONICS STATUS page and troubleshoot according to table 5-3.
2.0	If the display is blank, check the circuit breaker. Then swap the ASI 2 with the (operational) ASI 1. If the suspect unit display is still blank, replace that unit. If the unit now in the ASI 2 mount has a blank display, check the aircraft wiring.
	Note The following steps may fail if the ADC, ALI, or ASI has a defective receiver or transmitter. The best way to isolate the failed LRU is to swap like units; the problem will follow the failed LRU.
3.0	Rotate the IAS reference knob and verify that the IAS bug responds. If not, ensure that the mating connector is installed properly. Then, swap the ASI 2 with the (operational) ASI 1. Repeat this step. If the suspect unit still does not function, replace that unit. If the unit now in the ASI 2 mount no longer functions, check the ASI/ALI wiring and the R-ADC-3 bus wiring. If wiring is normal, test the ALI and ADC.
4.0	Push the IAS reference knob and verify that the IAS bug and reference displays alternately select and deselect.
5.0	Push the OAT ISA button once to display the OAT temperature and then again to display the ISA temperature. After 5 seconds, IOAT temperature automatically displays.

Table 5-41. ALI 2 Test Procedure.

STEP	PROCEDURE
	Note The two ALI's may be swapped with each other to verify aircraft wiring and to isolate a failed unit.
1.0	Check the AVIONICS STATUS page and troubleshoot according to table 5-3.
2.0	If the display is blank, check the circuit breaker. Then swap the ALI 2 with the (operational) ALI 1. If the suspect unit display is still blank, replace that unit. If the unit now in the ALI 2 mount has a blank display, check the aircraft wiring.
	Note The following steps may fail if the ADC, ALI, or ASI has a defective receiver or transmitter. The best way to isolate the failed LRU is to swap like units; the problem will follow the failed LRU.
3.0	Rotate the VS reference knob and verify that the VS bug responds. If not, ensure that the mating connector is installed properly. Then swap the ALI 2 with the (operational) ALI 1. Repeat this step. If the suspect unit still does not function, replace that unit. If the unit now in the ALI 2 mount no longer functions, check the R-ALI OUT bus wiring and the R-ADC-3 bus wiring. If wiring is normal, test the ADC.
4.0	Push the VS reference knob and verify that the VS bug and reference displays alternately select and deselect.
5.0	Rotate the BARO knob and verify that the barometric display responds. Push the BARO knob and verify that the barometric display changes to 29.92 (inches of mercury) or 1013 (millibars).
6.0	Rotate the ALT SEL knob and verify that the altitude preselect display responds. Push this knob to cancel altitude alerts or to test the aural warning.
7.0	Rotate the IAS reference knob (on the ASI 2) and verify that the IAS bug responds. If not, test the ASI and verify ASI/ALI wiring.
8.0	Set the BARO switch (on side reversionary panel) to MB. Push the BARO knob (on the ALI) and verify that the barometric display is 1013. Set the BARO switch to INCHES and verify that the display changes to 29.92.
9.0	If the FL 180 alert function is suspect, set the FL 180 switch (on side reversionary panel) to ALERT. The ALI barometric display is now enabled to flash at 18 000 feet altitude. This alert is disabled when the FL 180 switch is set to DISABLE.
10.0	If the overspeed warning function is suspect, push the remote VMO/MMO switch to test the aural overspeed warning.

Table 5-42. AHC 1 (and ICU 1) Test Procedure.

STEP	PROCEDURE
	Note The two AHC's may be swapped with each other to verify aircraft wiring and to isolate a failed unit. If the AHC is swapped or replaced, the ICU remains with the mount. If the ICU is replaced, a compass swing must be performed.
1.0	Check the AVIONICS STATUS page and troubleshoot according to table 5-3.
2.0	If code 1AHC5 displays on the AVIONICS STATUS page, test the FDU.
3.0	If code 1ADC5 displays on the AVIONICS STATUS page, test ADC 1.
4.0	If the AHRS power-up initialization is not successful (or continuously repeats), check for a ground on AHC pin P1-28 (STRUT). If present, check for a pulsed output from AHC pin P1-3 (INIT) to DAU pin P4-z. If present, swap AHC 1 with the (operational) AHC 2. If the fault follows the suspect AHC, replace that AHC. If the AHC now in the AHC 1 mount no longer initializes, check the aircraft wiring.
5.0	If HDG fail annunciates (on the ND) and ATT fail annunciates (on the PFD), set the AHRS reversionary switch to X-SIDE. If both annunciations clear, replace AHC 1.
6.0	If only ATT fail annunciates (HDG fail does not annunciate), set the AHRS reversionary switch to X-SIDE. If ATT fail annunciation clears, replace AHC 1.
7.0	If only HDG fail annunciates (ATT fail does not annunciate), test the FDU. If FDU tests normal, check that the ICU setup mode switch is set to the off position. If this switch is off, replace AHC 1.
8.0	If HDG DISAGREE annunciates on the ECD and both AHC's are valid (no ATT or HDG fail annunciations), make sure the aircraft is not near any large metal objects. External metallic objects like hangars, overhead power cables, and power carts can distort the AHRS heading sensors. If no metal objects are in the area, swap AHC's. If the incorrect heading follows the AHC, then replace that computer. If the heading indications do not change, check for compensation voltages at the suspect ICU. If a voltage is missing, replace the ICU. Remember that the ICU has a very low failure rate, and a compass swing must be performed if it is replaced.
9.0	Press the reversionary AHRS REINIT button and verify that the AHC reinitializes. If not successful, go to step 4.0.
10.0	Push the reversionary FAST SLAVE button to cause the AHC to fast slave to the FDU heading. If not successful, test the FDU.
11.0	If a battery backup problem is suspected, pull the circuit breaker to remove primary power from AHC pins P1-49 and P1-50. Battery power should still be applied to P1-51 and P1-52. The AHC should function normally for approximately 10 minutes.

Table 5-43. FDU 1 Test Procedure.

STEP	PROCEDURE
	Note If the FDU is swapped or replaced, a compass swing must be performed. If any FDU mounting hardware is replaced, ensure that new hardware is made of nonmagnetic material.
1.0	Check the AVIONICS STATUS page and troubleshoot according to table 5-3. Note that the FDU does not report to the AVIONICS STATUS page, but if no faults are detected by these diagnostics, then the FDU is operational.
2.0	If code 1AHC5 displays on the AVIONICS STATUS page, a flux detector problem has been detected. This code is caused by a failed AHC or by a failed FDU. Go to step 3.0 or 5.0.
3.0	If HDG fail is annunciated on the ND, but ATT fail is not annunciated on the PFD, then suspect the AHC or the FDU. Go to step 4.0.
4.0	Push the reversionary FAST SLAVE button. If the HDG fail annunciation clears, replace the FDU. If HDG fail still annunciates, check the FDU/AHC wiring. If wiring is normal, test the AHC.
5.0	If the flux detector fault is still not isolated, swap AHC computers. If the problem follows the suspect computer, replace the AHC. If the problem remains at the AHC mount, check the aircraft wiring. If wiring is normal, replace the FDU. Refer to the note on this page.

Table 5-44. AHC 2 (and ICU 2) Test Procedure.

STEP	PROCEDURE
	Note The two AHC's may be swapped with each other to verify aircraft wiring and to isolate a failed unit. If the AHC is swapped or replaced, the ICU remains with the mount. If the ICU is replaced, a compass swing must be performed.
1.0	Check the AVIONICS STATUS page and troubleshoot according to table 5-3.
2.0	If code 2AHC5 displays on the AVIONICS STATUS page, test the FDU.
3.0	If code 2ADC5 displays on the AVIONICS STATUS page, test ADC 2.
4.0	If the AHRS power-up initialization is not successful (or continuously repeats), check for a ground on AHC pin P1-28 (STRUT). If present, check for a pulsed output from AHC pin P1-3 (INIT) to DAU pin P4-BB. If present, swap AHC 2 with the (operational) AHC 1. If the fault follows the suspect AHC, replace that AHC. If the AHC now in the AHC 2 mount no longer initializes, check the aircraft wiring.
5.0	If HDG fail annunciates (on the ND) and ATT fail annunciates (on the PFD), set the AHRS reversionary switch to X-SIDE. If both annunciations clear, replace AHC 2.
6.0	If only ATT fail annunciates (HDG fail does not annunciate), set the AHRS reversionary switch to X-SIDE. If ATT fail annunciation clears, replace AHC 2.
7.0	If only HDG fail annunciates (ATT fail does not annunciate), test the FDU. If FDU tests normal, check that the ICU setup mode switch is set to the off position. If this switch is off, replace AHC 2.
8.0	If HDG DISAGREE annunciates on the ECD and both AHC's are valid (no ATT or HDG fail annunciations), make sure the aircraft is not near any large metal objects. External metallic objects like hangars, overhead power cables, and power carts can distort the AHRS heading sensors. If no metal objects are in the area, swap AHC's. If the incorrect heading follows the AHC, then replace that computer. If the heading indications do not change, check for compensation voltages at the suspect ICU. If a voltage is missing, replace the ICU. Remember that the ICU has a very low failure rate, and a compass swing must be performed if it is replaced.
9.0	Press the reversionary AHRS REINIT button and verify that the AHC reinitializes. If not successful, go to step 4.0.
10.0	Push the reversionary FAST SLAVE button to cause the AHC to fast slave to the FDU heading. If not successful, test the FDU.
11.0	If a battery backup problem is suspected, pull the circuit breaker to remove primary power from AHC pins P1-49 and P1-50. Battery power should still be applied to P1-51 and P1-52. The AHC should function normally for approximately 10 minutes.

Table 5-45. FDU 2 Test Procedure.

STEP	PROCEDURE
	Note If the FDU is swapped or replaced, a compass swing must be performed. If any FDU mounting hardware is replaced, ensure that new hardware is made of nonmagnetic material.
1.0	Check the AVIONICS STATUS page and troubleshoot according to table 5-3. Note that the FDU does not report to the AVIONICS STATUS page, but if no faults are detected by these diagnostics, then the FDU is operational.
2.0	If code 2AHC5 displays on the AVIONICS STATUS page, a flux detector problem has been detected. This code is caused by a failed AHC or by a failed FDU. Go to step 3.0 or 5.0.
3.0	If HDG fail is annunciated on the ND, but ATT fail is not annunciated on the PFD, then suspect the AHC or the FDU. Go to step 4.0.
4.0	Push the reversionary FAST SLAVE button. If the HDG fail annunciation clears, replace the FDU. If HDG fail still annunciates, check the FDU/AHC wiring. If wiring is normal, test the AHC.
5.0	If the flux detector fault is still not isolated, swap AHC computers. If the problem follows the suspect computer, replace the AHC. If the problem remains at the AHC mount, check the aircraft wiring. If wiring is normal, replace the FDU. Refer to the note on this page.

Table 5-46. FCC 1 Test Procedure.

STEP	PROCEDURE
	Note When investigating an autopilot problem, check the FCS report mode diagnostic codes. When investigating a flight director problem, the two FCC's and two MSP's may be swapped with each other to verify aircraft wiring and to isolate a failed unit.
1.0	Check the AVIONICS STATUS page and troubleshoot according to table 5-3. Note that FCC 1 diagnostics are disabled if the PWR 1A module fails.
	AUTOPILOT PROBLEM
2.0	Enter FCS DIAGNOSTICS and display the REPORT MODE page. Refer to paragraph 5.6.5.1, and investigate all nonzero codes. Remember to press the SUMMARY line keys for an on-screen explanation of the codes, or refer to tables 5-7 through 5-13.
	Note If an FCC column is blank, replace that left or right FCC. If the FCS DIAGNOSTICS will not display or if the page unexpectedly blanks, replace the FCC providing display data to the MFD.
	Record each 6-digit REPAIR code (error summary) if all digits are not 0.
	If autopilot/yaw damper will not engage: Record all six digits of each AP ENG and YD ENG code.
	If autopilot/yaw damper disengaged itself: Record all six digits of each AP DIS and YD DIS code.
3.0	If an autopilot panel problem is suspected, test the APP.
4.0	If a servo problem is suspected, test the SVO's.
	FLIGHT DIRECTOR PROBLEM
5.0	If a left side mode select problem is suspected, test the MSP 1.
6.0	If FD (fail) annunciates on the PFD, record and investigate the 6-digit STEER codes displayed on the REPORT mode page. Then exit FCS DIAGNOSTICS.
7.0	Press the HDG button on the MSP. Momentarily push the HDG knob on the CHP. Rotate the HDG knob and verify that the PFD command bars respond laterally.
8.0	Press the VS button on the MSP. Rotate the VS reference knob on the ALI and verify that the PFD command bars respond vertically.
9.0	Press the SYNC button on the left control wheel and verify that the VS reference goes to zero and that the FD command bars null.
10.0	If a pitch trim problem is suspected, verify proper operation similar to the roll trim test provided in the ATC procedure. Move the control wheel back and verify nosedown trim; move the wheel forward and verify noseup trim. Refer to paragraph 5.6.5.3 and set FCC trim outputs to isolate an FCC/pitch trim interface problem.

Table 5-47. MSP 1 Test Procedure.

STEP	PROCEDURE
	Note The two MSP's may be swapped with each other to verify aircraft wiring and to isolate a failed unit. The two FCC's may also be swapped to help isolate a mode select problem.
1.0	Check the AVIONICS STATUS page and troubleshoot according to table 5-3. Note that MSP 1 power is supplied by the PWR 1A module in the IAPS.
2.0	If the MSP is completely dead, verify that power is applied to MSP pin P1-13/25 (+5 V ISOL). If power is present, replace the MSP 1. If power is not present, test the PWR 1A and check the aircraft wiring.
3.0	The MSP buttons are push-on/push-off switches. Push an MSP button "on" and verify that the mode indicator above the button lights, and that the selected mode annunciates on the PFD. Then push the button again and verify that both annunciations clear. Repeat for each MSP button. If any indicator fails to light or if the mode fails to annunciate on the PFD, suspect either the MSP 1 or the FCC 1. First check that the mating connector is installed properly. Then swap FCC modules and repeat step 3.0. If the test is now successful, replace the suspect FCC. If the test still fails, swap MSP's and repeat step 3.0. If the test is now successful, replace the suspect MSP. If the test still fails, verify the aircraft wiring. Go to step 5.0.
4.0	If a problem is suspected with the (AP XFR or TURB) button mode logic from the APP to the MSP 1, verify the aircraft wiring and test the APP.
5.0	An alternate way to troubleshoot an MSP 1 mode select problem is to enter FCS DIAGNOSTICS and display the INPUT MODE page. Select the parameters listed below and alternately press each MSP button. Verify that the left parameter value is TRUE while that MSP button is pressed, and FALSE when that button is released.

MSP button:	HDG	1/2 BANK	APPR	NAV	VS	IAS PROF	DESCEND	ALT	IAS
Parameter:	SWIHDG	SWI1/2	SWIAPP	SWINAV	SWIVS	SWIPFL	SWIDES	SWIALT	SWIIAS

If some (but not all) buttons pass this test, replace the MSP 1. If none of the buttons pass, suspect the MSP TO FCC A bus. Check the suspect bus, and swap MSP's and FCC's to isolate the problem.

Display the OUTPUT MODE page and set the ANNUNS parameter to TRUE. Remember that both FCC's must be in diagnostics to set an output. Verify that the mode indicators above the MSP buttons all light while ANNUNS is TRUE and go out when ANNUNS is FALSE. If some (but not all) indicators light, suspect a burned-out bulb in the MSP 1. If all mode indicators light but will not go out, suspect the FCC TO MSP A bus. Check the suspect bus, and swap MSP's and FCC's to isolate the problem.

Table 5-48. FCC 2 Test Procedure.

STEP	PROCEDURE
	Note When investigating an autopilot problem, check the FCS report mode diagnostic codes. When investigating a flight director problem, the two FCC's and two MSP's may be swapped with each other to verify aircraft wiring and to isolate a failed unit.
1.0	Check the AVIONICS STATUS page and troubleshoot according to table 5-3. Note that FCC 2 diagnostics are disabled if the PWR 2A module fails.
	AUTOPILOT PROBLEM
2.0	Enter FCS DIAGNOSTICS and display the REPORT MODE page. Refer to paragraph 5.6.5.1, and investigate all nonzero codes. Remember to press the SUMMARY line keys for an on-screen explanation of the codes, or refer to tables 5-7 through 5-13.
	Note If an FCC column is blank, replace that left or right FCC. If the FCS DIAGNOSTICS will not display or if the page unexpectedly blanks, replace the FCC providing display data to the MFD.
	Record each 6-digit REPAIR code (error summary) if all digits are not 0.
	If autopilot/yaw damper will not engage: Record all six digits of each AP ENG and YD ENG code.
	If autopilot/yaw damper disengaged itself: Record all six digits of each AP DIS and YD DIS code.
3.0	If an autopilot panel problem is suspected, test the APP.
4.0	If a servo problem is suspected, test the SVO's.
	FLIGHT DIRECTOR PROBLEM
5.0	If a right side mode select problem is suspected, test the MSP 2.
6.0	If FD (fail) annunciates on the PFD, record and investigate the 6-digit STEER codes displayed on the REPORT mode page. Then exit FCS DIAGNOSTICS.
7.0	Press the HDG button on the MSP. Momentarily push the HDG knob on the CHP. Rotate the HDG knob and verify that the PFD command bars respond laterally.
8.0	Press the VS button on the MSP. Rotate the VS reference knob on the ALI and verify that the PFD command bars respond vertically.
9.0	Press the SYNC button on the right control wheel and verify that the VS reference goes to zero and that the FD command bars null.
10.0	If a pitch trim problem is suspected, verify proper operation similar to the roll trim test provided in the ATC procedure. Move the control wheel back and verify nosedown trim; move the wheel forward and verify noseup trim. Refer to paragraph 5.6.5.3 and set FCC trim outputs to isolate an FCC/pitch trim interface problem.

Table 5-49. MSP 2 Test Procedure.

STEP	PROCEDURE
	Note The two MSP's may be swapped with each other to verify aircraft wiring and to isolate a failed unit. The two FCC's may also be swapped to help isolate a mode select problem.
1.0	Check the AVIONICS STATUS page and troubleshoot according to table 5-3. Note that MSP 2 power is supplied by the PWR 2A module in the IAPS.
2.0	If the MSP is completely dead, verify that power is applied to MSP pin P1-13/25 (+5 V ISOL). If power is present, replace the MSP 2. If power is not present, test the PWR 2A and check the aircraft wiring.
3.0	The MSP buttons are push-on/push-off switches. Push an MSP button "on" and verify that the mode indicator above the button lights, and that the selected mode annunciates on the PFD. Then push the button again and verify that both annunciations clear. Repeat for each MSP button. If any indicator fails to light or if the mode fails to annunciate on the PFD, suspect either the MSP 2 or the FCC 2. First check that the mating connector is installed properly. Then swap FCC modules and repeat step 3.0. If the test is now successful, replace the suspect FCC. If the test still fails, swap MSP's and repeat step 3.0. If the test is now successful, replace the suspect MSP. If the test still fails, verify the aircraft wiring. Go to step 5.0.
4.0	If a problem is suspected with the (AP XFR or TURB) mode/annunciator logic between the APP and the MSP 2, verify aircraft wiring and test the APP.
5.0	An alternate way to troubleshoot an MSP 2 mode select problem is to enter FCS DIAGNOSTICS and display the INPUT MODE page. Select the parameters listed below and alternately press each MSP button. Verify that the right parameter value is TRUE while that MSP button is pressed, and FALSE when that button is released.

MSP button:	HDG	1/2 BANK	APPR	NAV	VS	IAS PROF	DESCEND	ALT	IAS
Parameter:	SWIHDG	SWI1/2	SWIAPP	SWINAV	SWIVS	SWIPFL	SWIDES	SWIALT	SWIIAS

If some (but not all) buttons pass this test, replace the MSP 2. If none of the buttons pass, suspect the MSP TO FCC B bus. Check the suspect bus, and swap MSP's and FCC's to isolate the problem.

Display the OUTPUT MODE page and set the ANNUNS parameter to TRUE. Remember that both FCC's must be in diagnostics to set an output. Verify that the mode indicators above the MSP buttons all light while ANNUNS is TRUE and go out when ANNUNS is FALSE. If some (but not all) indicators light, suspect a burned-out bulb in the MSP 2. If all mode indicators light but will not go out, suspect the FCC TO MSP B bus. Check the suspect bus, and swap MSP's and FCC's to isolate the problem.

Table 5-50. APP Test Procedure.

STEP	PROCEDURE
1.0	Check the AVIONICS STATUS page and troubleshoot according to table 5-3. Note that the APP does not report to the AVIONICS STATUS page, but any faults detected by these diagnostics should be resolved before beginning this procedure.
2.0	Raise the AP and YD levers and verify that they remain engaged. If the levers will not stay up, verify the APP inputs specified below.

Check for +28 V dc at these pins:	P1-1,3,7,10,13,23,25,29,30,32.
Check for an open at these pins:	P1-11,15,19,21.

3.0	Verify that pressing each AP DISC, GO AROUND, and manual trim switch disengages the autopilot (levers drop).
4.0	Push the AP XFR button and verify that the mode indicator in the button lights. Then push the button again and verify that the light goes off. Repeat for the TURB button. If an indicator fails to light, suspect either the APP or MSP 2. Swap MSP modules and repeat this step. If the test is now successful, replace the suspect MSP. If the test still fails, put both FCC's into FCS DIAGNOSTICS and select the OUTPUT mode page. Set the right ANNUNS parameter to TRUE, and verify that the AP XFR and TURB indicators light. If not, suspect a burned-out bulb or an APP/MSP 2/FCC 2 wiring problem.
5.0	Enter FCS DIAGNOSTICS and display the INPUT MODE page. Select the following parameters and verify proper LEFT and RIGHT inputs to the FCC. Voltages are approximate.

PARAMETER	ACTION/RESULT
KNOB-R	Rotate turn knob and verify +4.3 (cw) to -4.3 (ccw) VOLTS.
KNOB-P	Rotate pitch wheel and verify +1.8 (up) to -1.8 (down) VOLTS.
SWITRB	Press TURB button and verify TRUE until button is released.
SWIXFR	Press AP XFR button and verify TRUE until button is released.
ENGA/P	Raise AP lever and verify TRUE while lever remains up.
ENGY/D	Raise YD lever and verify TRUE while lever remains up.

	The LEFT and RIGHT input signal values should always (reasonably) agree. If one input is wrong, suspect the MSP and associated APP/MSP/FCC wiring on that side.
6.0	If a servo engage (clutch) problem is suspected, test the SVO's.

Table 5-51. SVO (Aileron) Test Procedure.

STEP	PROCEDURE
1.0	Check the AVIONICS STATUS page and troubleshoot according to table 5-3. Note that the SVO does not report to the AVIONICS STATUS page, but any faults detected by these diagnostics should be resolved before beginning this procedure. **Note** Both FCC's operate together to drive each servo. If an autopilot/servo problem is suspected, first test the two FCC's and investigate all nonzero REPORT MODE codes. Be certain that both FCC's are operational before replacing any servo.
2.0	Verify that the control wheel moves freely in a left/right direction. If not, check the servo mount control linkage. Center the control wheel.
3.0	Engage the autopilot and yaw damper. Verify that AP and YD levers stay up, and that the control wheel resists forced movement. If not, verify that +28 V dc is applied from APP P1-17 to SVO pin P1-E (AIL ENG CLUTCH) while the levers are up. If not, check aircraft wiring and test the APP.
4.0	Rotate the APP turn knob cw, and then ccw into detent. Verify that the control wheel moves right, and then returns to center. The ailerons should respond accordingly. If not, check the servo mount control linkage and the aircraft wiring. If normal, replace the aileron SVO.
5.0	Disengage the autopilot and yaw damper. Verify that the control wheel moves freely.
6.0	An alternate way to test the aileron SVO is provided below. Put both FCC's into FCS DIAGNOSTICS and select the OUTPUT MODE page. If necessary, set the 65APMN, 86APMN, 65YDMN, and 86YDMN parameters to TRUE; set the AILCUT parameter to FALSE. Then engage the autopilot and yaw damper. Display the AILCMD parameter, and put the cursor on this line. Push the SLEW PLUS and SLEW MINUS line keys (or rotate the APP turn knob) to apply a servo command output. Verify that the control wheel and the ailerons respond.

Table 5-52. SVO (Elevator) Test Procedure.

STEP	PROCEDURE
1.0	Check the AVIONICS STATUS page and troubleshoot according to table 5-3. Note that the SVO does not report to the AVIONICS STATUS page, but any faults detected by these diagnostics should be resolved before beginning this procedure. **Note** Both FCC's operate together to drive each servo. If an autopilot/servo problem is suspected, first test the two FCC's and investigate all nonzero REPORT MODE codes. Be certain that both FCC's are operational before replacing any servo.
2.0	Verify that the control wheel moves freely in a fore/aft direction. If not, check the servo mount control linkage. Center the control wheel.
3.0	Engage the autopilot and yaw damper. Verify that AP and YD levers stay up, and that the control wheel resists forced movement. If not, verify that +28 V dc is applied from APP P1-16 to SVO pin P1-M (ELEV ENG CLUTCH) while the levers are up. If not, check aircraft wiring and test the APP.
4.0	Rotate the APP pitch wheel up, and then down into detent. Verify that the control wheel moves forward and then returns to center. The elevators should respond accordingly. If not, check the servo mount control linkage and the aircraft wiring. If normal, replace the elevator SVO.
5.0	Disengage the autopilot and yaw damper. Verify that the control wheel moves freely.
6.0	An alternate way to test the elevator SVO is provided below. Put both FCC's into FCS DIAGNOSTICS and select the OUTPUT MODE page. If necessary, set the 65APMN, 86APMN, 65YDMN, and 86YDMN parameters to TRUE; set the ELECUT parameter to FALSE. Then engage the autopilot and yaw damper. Display the ELECMD parameter, and put the cursor on this line. Push the SLEW PLUS and SLEW MINUS line keys (or rotate the APP turn knob) to apply a servo command output. Verify that the control wheel and the elevators respond.

Table 5-53. SVO (Rudder) Test Procedure.

STEP	PROCEDURE
1.0	Check the AVIONICS STATUS page and troubleshoot according to table 5-3. Note that the SVO does not report to the AVIONICS STATUS page, but any faults detected by these diagnostics should be resolved before beginning this procedure. **Note** Both FCC's operate together to drive each servo. If a yaw damper/servo problem is suspected, first test the two FCC's and investigate all nonzero REPORT MODE codes. Be certain that both FCC's are operational before replacing any servo.
2.0	Verify that the rudder pedals move freely in both directions. If not, check the servo mount control linkage.
3.0	Engage the autopilot and yaw damper. Verify that AP and YD levers stay up, and that the rudder pedals resist forced movement. If not, verify that +28 V dc is applied from APP P1-14 to SVO pin P1-E (RUD ENG CLUTCH) while the levers are up. If not, check aircraft wiring and test the APP.
4.0	Disengage the autopilot and yaw damper. Verify that the control wheel moves freely.
5.0	An alternate way to test the rudder SVO is provided below. Put both FCC's into FCS DIAGNOSTICS and select the OUTPUT MODE page. If necessary, set the 65APMN, 86APMN, 65YDMN, and 86YDMN parameters to TRUE; set the RUDCUT parameter to FALSE. Then engage the autopilot and yaw damper. Display the RUDCMD parameter and put the cursor on this line. Push the SLEW PLUS and SLEW MINUS line keys (or rotate the APP turn knob) to apply a servo command output. Verify that the rudder pedals and the rudders (in the winglets) respond.

Table 5-54. ATC Test Procedure.

STEP	PROCEDURE
1.0	Check the AVIONICS STATUS page and troubleshoot according to table 5-3. Note that the ATC does not report to the AVIONICS STATUS page, but any faults detected by these diagnostics should be resolved before beginning this procedure. **Note** The ATC provides roll and yaw trim arm and command outputs to the Beech trim system. The Beech trim system runs the trim servos.
2.0	If roll trim functions are totally inoperative, verify that power is applied to pins P1-1, 17, and 19. If power is present, refer to the system schematic and isolate the ATC/roll trim interface problem.
3.0	Verify proper roll trim operation as follows: Operate the manual trim switch (outboard horn) to zero the roll trim indicator (located by the throttle). Center the control wheel and then engage the autopilot. Turn the control wheel clockwise until the trim system runs. Verify that the roll trim indicator indicates LWD (left wing down) trim. Center the control wheel and verify that the roll trim indicator zeros. Press the manual trim switch and verify that the autopilot disengages. Then, cycle the roll trim reset switch (pedestal). Repeat this step, but turn the control wheel counterclockwise and verify RWD (right wing down) trim.
4.0	If rudder (yaw) trim functions are totally inoperative, verify that power is applied to pins P2-5, 17, and 19. If power is present, refer to the system schematic and isolate the ATC/yaw trim interface problem.
5.0	Verify proper rudder trim operation as follows: Operate the rudder trim switch (pedestal) to zero the rudder trim indicator (located by the throttle). Center the rudder pedals and then engage the yaw damper. Press the right rudder pedal just enough to run the trim system (pedals are hard to move because of the steering linkage). Verify that the rudder trim indicator indicates nose-left trim. Center the rudder pedals and verify that the rudder trim indicator zeros. Operate the rudder trim switch and verify that the yaw damper disengages. Then, cycle the rudder trim reset switch (pedestal). Repeat this step, but press the left pedal and verify nose-right trim.

Table 5-55. FMC-851A Test Procedure.

STEP	PROCEDURE
	Note The primary diagnostic system is contained in the FMC-851A and FMC-852A modules. These LRU's are powered by the PWR 1B module in the IAPS. A major failure in any of these LRU's will disable diagnostics.
1.0	Check the AVIONICS STATUS page and troubleshoot according to table 5-3.
	Note The FMC-851A and the FMC-852A operate together as a matched pair. If only one of these units is replaced, the system will erase all stored FMS information (data base, checklists, routes, fault history, etc). Use the DBU to download this information onto disk before changing just one module. Then upload the data into the new module.
2.0	If "FMS FAULT" annunciates on the left CDU, cycle the FMS 1 circuit breaker. Wait 5 minutes. If this fault annunciates again, replace the FMC-851A and FMC-852A; check the L-FMS-3 bus. If fault clears, go to step 1.0.
3.0	If "CDU FAULT" annunciates on the left CDU, test the CDU 1.
4.0	Select FMS as the active NAV source (on CDU 1). Verify proper FMS active source annunciation on the ND 1 and (underline) response on the CDU. If any CDU or FMS error annunciates on the ND, replace the FMC-851A and FMC-852A.
5.0	Display the present position map on the MFD. Verify that the map appears reasonable and that navaid symbols are displayed. If not, replace the FMC-851A and FMC-852A; also check the L-FMS-2 bus wiring to the MFD.
6.0	If an FMS control failure is suspected, test the CDU's. If the problem exists on both CDU's, replace the FMC-851A and FMC-852A. Otherwise, replace the failed CDU.
7.0	If an FMC/CDC crosstalk problem is suspected, test the CDC-850A.
8.0	If a data base update problem exists, suspect the DBU or the FMC-851A/FMC-852A. Test the DBU. If the DBU tests normal, replace the FMC-851A and FMC-852A.

Table 5-56. FMC-852A Test Procedure.

STEP	PROCEDURE
	Note The primary diagnostic system is contained in the FMC-851A and FMC-852A modules. These LRU's are powered by the PWR 1B module in the IAPS. A major failure in any of these LRU's will disable diagnostics. If it is impossible to isolate an FMS fault to the FMC-851A or the FMC-852A, replace both LRU's.
1.0	Check the AVIONICS STATUS page and troubleshoot according to table 5-3.
	Note The FMC-851A and the FMC-852A operate together as a matched pair. If only one of these units is replaced, the system will erase all stored FMS information (data base, checklists, routes, fault history, etc). Use the DBU to download this information onto disk before changing just one module. Then upload the data into the new module.
2.0	If a data base update problem exists, suspect the DBU or the FMC-851A/FMC-852A. Test the DBU. If the DBU tests normal, replace the FMC-851A and FMC-852A.

Table 5-57. CDC-850A Test Procedure.

STEP	PROCEDURE
	Note If the CDC-850A fails, the diagnostic system may incorrectly identify some failures. Troubleshoot the CDC-850A before investigating other failures detected by the diagnostics.
1.0	Check the AVIONICS STATUS page and troubleshoot according to table 5-3. Note that the CDC-850A is powered by the PWR 2B module in the IAPS.
2.0	If "FMS FAULT" annunciates on the right CDU, cycle the FMS 2 circuit breaker. Wait 5 minutes. If this fault annunciates again, replace the CDC-850A; check the R-FMS-3 bus. If fault clears, go to step 1.0.
3.0	If "CDU FAULT" annunciates on the right CDU, test the CDU 2.
4.0	If not already done, test the FMC-851A before continuing this procedure. The FMC-851A must be operational to fully test the CDC-850A.
5.0	Select FMS as the active NAV source (on CDU 2). Verify proper FMS active source annunciation on the ND 2 and (underline) response on the CDU. If any CDU or FMS error annunciates on the ND, replace the CDC-850A.
6.0	Display the flight plan page on the right CDU. If this page will not display, select the flight plan page on the left CDU. If flight plan page displays on the left CDU only, suspect a crosstalk problem (L-FMS-4 and R-FMS-4 buses). Replace the CDC-850A. If problem is still present, replace the FMC-851A and FMC-852A.

Table 5-58. CDU 1 Test Procedure.

STEP	PROCEDURE
	Note The two CDU's may be swapped with each other to verify aircraft wiring and to isolate a failed unit.
1.0	Check the AVIONICS STATUS page and troubleshoot according to table 5-3.
2.0	If the display is blank, check the circuit breaker. Then swap the CDU 1 with the (operational) CDU 2. If the suspect unit display is still blank, replace that unit. If the unit now in the CDU 1 mount has a blank display, check the aircraft wiring.
3.0	If "FMS FAULT" annunciates, test the FMC-851A.
4.0	If "CDU FAULT" annunciates, replace the CDU 1.
5.0	Select FMS and then VOR1 as the active NAV source. Verify proper underline response on the CDU. If not, swap CDU's to isolate a failed CDU; check L-CDU-1 and L-FMS-3 buses. If the problem still exists, test the FMC-851A.
6.0	Set the left CDU reversionary switch to X-SIDE and verify that the CDU 1 display blanks. Then set switch to NORM.
7.0	Check all CDU line keys, pushbuttons, and knobs for sticking or improper operation. Alternately press the following page select keys and verify proper CDU displays: COM, NAV, ADF, ATC, FLT PLAN, SYS CTRL, IDX, DIR, NAV SOURCE, RDR CONTROL, and BRG. Select from available options (tune radios, scroll pages, change sources, etc) and verify proper operation. If a radio does not retune, ensure reversionary RAD RMT switch is set to NORM; if switch is correct, test RTU 1 and the suspect radio. If any FMS control function fails, test the FMC-851A. Press the remaining CDU keyboard buttons and verify that each key (except VNAV) is operational. Alphanumeric keys write on the scratch pad line. If a problem is suspected with the TILT or RANGE knob, test the RTA.
8.0	If an AAP 1 problem exists, test the AAP 1 and verify AAP/CDU 1 wiring. If AAP 1 functions in the AAP 2 mount and wiring is correct, replace the CDU 1.
9.0	If a CHP problem exists, test the CHP and verify CHP/CDU 1 wiring. If the CHP tests normal and wiring is correct, replace the CDU 1.

Table 5-59. CDU 2 Test Procedure.

STEP	PROCEDURE
	Note The two CDU's may be swapped with each other to verify aircraft wiring and to isolate a failed unit.
1.0	Check the AVIONICS STATUS page and troubleshoot according to table 5-3.
2.0	If the display is blank, check the circuit breaker. Then swap the CDU 2 with the (operational) CDU 1. If the suspect unit display is still blank, replace that unit. If the unit now in the CDU 2 mount has a blank display, check the aircraft wiring.
3.0	If "FMS FAULT" annunciates, test the CDC-850A.
4.0	If "FMS DATA UNAVAILABLE" annunciates during initialization, test the CDC-850A (cross-talk problem).
5.0	If "CDU FAULT" annunciates, replace the CDU 2.
6.0	Select FMS and then VOR2 as the active NAV source. Verify proper underline response on the CDU. If not, swap CDU's to isolate a failed CDU; check R-CDU-1 and R-FMS-3 buses. If the problem still exists, test the CDC-850A.
7.0	Set the right CDU reversionary switch to X-SIDE and verify that the CDU 2 display blanks. Then set switch to NORM.
8.0	Check all CDU line keys, pushbuttons, and knobs for sticking or improper operation. Alternately press the following page select keys and verify proper CDU displays: COM, NAV, ADF, ATC, FLT PLAN, SYS CTRL, IDX, DIR, NAV SOURCE, RDR CONTROL, and BRG. Select from available options (tune radios, scroll pages, change sources, etc) and verify proper operation. If a radio does not retune, ensure reversionary RAD RMT switch is set to NORM; if switch is correct, test RTU 2 and the suspect radio. If any FMS control function fails, test the FMC-851A and the CDC-850A. Press the remaining CDU keyboard buttons and verify that each key (except VNAV) is operational. Alphanumeric keys write on the scratch pad line. If a problem is suspected with the TILT or RANGE knob, test the RTA.
9.0	If an AAP 2 problem exists, test the AAP 2 and verify AAP/CDU 2 wiring. If AAP 2 functions in the AAP 1 mount and wiring is correct, replace the CDU 2.
10.0	If a CHP problem exists, test the CHP and verify CHP/CDU 2 wiring. If the CHP tests normal and wiring is correct, replace the CDU 2.

Table 5-60. CHP Test Procedure.

STEP	PROCEDURE
1.0	Check the AVIONICS STATUS page and troubleshoot according to table 5-3. Note that the CHP does not report to the AVIONICS STATUS page, but any faults detected by these diagnostics should be resolved before beginning this procedure.
2.0	Select VOR 1 as the active NAV source (on CDU 1). Tune the VOR 1 receiver to a local station or to a ground test frequency.
3.0	Rotate the CRS 1 knob and verify that the active course display and active course pointer on the ND 1 respond. Press the PUSH DIRECT switch (in the knob) and verify that the active course shows an angle direct to the tuned station. If test fails, go to step 7.0.
4.0	Repeat step 3.0 using the CRS 2 knob and the ND 2 display. If test fails, go to step 7.0.
5.0	Rotate the HDG knob and verify that the heading bug on both ND's responds. If the bugs do not move at the same speed, test the CDU on the side with the slowest bug. Press the PUSH SYNC switch (in the knob) and verify that both heading bugs move to the lubber line. If test fails, go to step 7.0.
6.0	Display a checklist on the MFD. Move the CHP joystick up to select the previous checklist page, down to select the next checklist page, right to exit the checklist and select the next one on the menu, and left to exit the checklist and select the previous one on the menu. If test fails, verify continuity from CHP pin P1-9 to the following pins as the joystick is held in position: P1-20 (up), P1-21 (down), P1-22 (right), and P1-23 (left). If normal, check wiring to the MFD. If wiring is correct, test the MFD.
7.0	An alternate way to test the CHP knob functions is provided below. If these tests pass, the CHP knobs are operational. If a knob fails an above test but passes these tests, check CHP/CDU wiring; if wiring is correct, test left or right CDU. SEL A: 0.5 V, 5.0 V, 0.5 V SEL B: 0.5 V, 0.5 V, 5.0 V Rotate CRS 1 knob and verify that dc voltages at pins SEL A (P1-8) and SEL B (P1-7) sequentially change (as shown above) at each knob detent. Rotate CRS 2 knob and verify that dc voltages at pins SEL A (P1-2) and SEL B (P1-1) sequentially change at each knob detent. Rotate HDG knob and verify that dc voltages at pins SEL A (P1-6), SEL B (P1-5), SEL A (P1-4), and SEL B (P1-3) sequentially change at each knob detent. Verify that while a knob inset button is pushed, a ground is applied to the proper pin(s). CRS 1 grounds pin P1-18 (DIRECT TO), CRS 2 grounds pin P1-15 (DIRECT TO), and HDG grounds pins P1-17 and P1-16 (SYNC).

Table 5-61. AAP 1 Test Procedure.

STEP	PROCEDURE
	Note The two AAP's may be swapped with each other to verify aircraft wiring and to isolate a failed unit.
1.0	Check the AVIONICS STATUS page and troubleshoot according to table 5-3. Note that the AAP does not report to the AVIONICS STATUS page, but any faults detected by these diagnostics should be resolved before beginning this procedure.
2.0	Rotate the DH SET knob and verify that decision height displays on PFD 1 and that the numerical DH value responds to knob movement. Press the PUSH OFF switch (in the knob) and verify that DH display alternately selects and deselects with each push. If test fails, go to step 6.0.
3.0	Set RPT/MDA switch to RPT position. Rotate the right SET knob and verify that reporting altitude displays on PFD 1 and that the numerical RPT value responds to knob movement. Press the PUSH OFF switch (in the knob) and verify that RPT display alternately selects and deselects with each push. If test fails, go to step 6.0.
4.0	Set RPT/MDA switch to MDA position. Repeat step 3.0 and verify that minimum decision altitude displays on PFD 1 and that the numerical MDA value responds to knob movement. If test fails, go to step 6.0.
5.0	Press and hold the RA TEST button. Verify that both PFD's display a circular radio altitude scale. If the radio altimeter passes self-test, the display should indicate 50 feet. If scale is not displayed, verify that a ground is applied from AAP pin P1-3 to RAC pin P1-40 while the RA TEST button is pressed. If a ground is present, test the ALT.
6.0	An alternate way to test the AAP knob functions is provided below. If these tests pass, the AAP knobs are operational. If a knob fails an above test but passes these tests, check AAP 1/CDU 1 wiring; if wiring is correct, test CDU 1. SEL A: 0.5 V / 5.0 V / 0.5 V SEL B: 0.5 V / 0.5 V / 5.0 V Rotate DH SET knob and verify that dc voltages at pins SEL A (P1-1) and SEL B (P1-2) sequentially change (as shown above) at each knob detent. Rotate right SET knob and verify that dc voltages at pins SEL A (P1-7) and SEL B (P1-8) sequentially change at each knob detent. Verify that while a knob inset button is pushed, a ground is applied to the proper pin(s). The DH inset button grounds pin P1-9 (ON/OFF); the RPT ALT/MDA knob inset button grounds pin P1-15 (ON/OFF). Verify that P1-6 is a ground when the RPT/MDA switch is set to RPT, and an open when set to MDA.

Table 5-62. AAP 2 Test Procedure.

STEP	PROCEDURE
	Note The two AAP's may be swapped with each other to verify aircraft wiring and to isolate a failed unit.
1.0	Check the AVIONICS STATUS page and troubleshoot according to table 5-3. Note that the AAP does not report to the AVIONICS STATUS page, but any faults detected by these diagnostics should be resolved before beginning this procedure.
2.0	Rotate the DH SET knob and verify that decision height displays on PFD 2 and that the numerical DH value responds to knob movement. Press the PUSH OFF switch (in the knob) and verify that DH display alternately selects and deselects with each push. If test fails, go to step 6.0.
3.0	Set RPT/MDA switch to RPT position. Rotate the right SET knob and verify that reporting altitude displays on PFD 2 and that the numerical RPT value responds to knob movement. Press the PUSH OFF switch (in the knob) and verify that RPT display alternately selects and deselects with each push. If test fails, go to step 6.0.
4.0	Set RPT/MDA switch to MDA position. Repeat step 3.0 and verify that minimum decision altitude displays on PFD 2 and that the numerical MDA value responds to knob movement. If test fails, go to step 6.0.
5.0	Press and hold the RA TEST button. Verify that both PFD's display a circular radio altitude scale. If the radio altimeter passes self-test, the display should indicate 50 feet. If scale is not displayed, verify that a ground is applied from AAP pin P1-3 to RAC pin P1-40 while the RA TEST button is pressed. If a ground is present, test the ALT.
6.0	An alternate way to test the AAP knob functions is provided below. If these tests pass, the AAP knobs are operational. If a knob fails an above test but passes these tests, check AAP 2/CDU 2 wiring; if wiring is correct, test CDU 2. SEL A: 0.5 V, 5.0 V, 0.5 V SEL B: 0.5 V, 0.5 V, 5.0 V Rotate DH SET knob and verify that dc voltages at pins SEL A (P1-1) and SEL B (P1-2) sequentially change (as shown above) at each knob detent. Rotate right SET knob and verify that dc voltages at pins SEL A (P1-7) and SEL B (P1-8) sequentially change at each knob detent. Verify that while a knob inset button is pushed, a ground is applied to the proper pin(s). The DH inset button grounds pin P1-9 (ON/OFF); the RPT ALT/MDA knob inset button grounds pin P1-15 ON/OFF). Verify that P1-6 is a ground when the RPT/MDA switch is set to RPT, and an open when set to MDA.

Table 5-63. DBU Test Procedure.

STEP	PROCEDURE
	Note The DBU is operational if the FMS can successfully read from a diskette and write onto a diskette. Note that the DBU is powered by the PWR 1B module in the IAPS.
1.0	Check the AVIONICS STATUS page and troubleshoot according to table 5-3. Note that the DBU does not report to the AVIONICS STATUS page, but any faults detected by these diagnostics should be resolved before beginning this procedure.
2.0	Press the IDX page key on the CDU 1. Then press the READ/WRITE DISKETTE line key.
3.0	Insert a data base update diskette into the DBU. Then press the READ FILE FROM DISKETTE line key. Verify that the CDU displays a directory of the diskette (FLT-DATA.NA or FLT-DATA.NAN). If the CDU displays a DBU NOT AVAILABLE error message, go to step 7.0. If any other error message is displayed, repeat this step with another (known-good) diskette. It is not necessary to actually load a file into FMS memory to test the DBU read function. Press the CANCEL line key and then the READ/WRITE DISKETTE line key.
4.0	Remove the data base diskette from the DBU and insert a blank diskette (does not have to be formatted). Press the WRITE FILE TO DISKETTE line key. Verify that the CDU displays a list of files which may be downloaded to diskette.
5.0	Press the ENGINE EXCEEDANCES line key and then the ENTER line key to begin the write operation. If the CDU displays a DBU NOT AVAILABLE error message, go to step 7.0. If any other error message is displayed, repeat this step with another blank diskette. After the write operation is complete, a WRITE COMPLETE message is displayed on the CDU. Then press the INDEX line key.
6.0	Repeat steps 2.0 through 5.0 using the CDU 2.
7.0	Perform this step only if any of steps 2.0 through 6.0 fail. Verify that the DBU power light is on. If not, verify that power is applied to DBU pin P1-3/4 (+5 V ISOL). If power is present, replace the DBU. If power is not present, check DBU/IAPS wiring and test the PWR 1B. Verify the DBU/IAPS wiring according to the FMS system schematic. Check for activity on the DBU input pins while attempting to read and write. If no activity is detected on the DBU input pins (especially MOTOR ON logic pin P1-7 and WRITE DATA P1-13), test the FMC-851A and FMC-852A. Otherwise replace the DBU; the problem may be a failed DBU or head misalignment.

Table 5-64. VHF 1 Test Procedure.

STEP	PROCEDURE
	Note The two VHF's may be swapped with each other to verify aircraft wiring and to isolate a failed unit.
1.0	Check the AVIONICS STATUS page and troubleshoot according to table 5-3.
2.0	If the AVIONICS STATUS page indicates a VHF COMM ANT 1 fault, replace the number 1 COM antenna.
	Note When power is first applied to the VHF 1, a brief tone is applied to the aircraft audio system; if a continuous tone is heard, replace the VHF 1. If two short tones are heard (any time the VHF 1 is on), the radio has detected a fault; go to step 1.0.
3.0	Display the LRU DIAGNOSTIC DATA page showing the VHF COMM XCVR 1 word on the MFD. Select the COM mode page on the left RTU, then press and hold the TST line key. Verify that the VHF COMM XCVR 1 diagnostic word changes from 600001 to 400001, and then back to 600001 after the TST key is released. If middle digits are not zero, investigate the fault according to table 5-5.
4.0	Display the COM page on both CDU's. Use the left RTU and tune the COM 1 radio to a local ground control frequency. Verify that both CDU's and the left RTU display this frequency. The CDU's should show this frequency on the ACTIVE line and displayed in green.
5.0	Request a radio check from the tower and verify proper transmit and receive operation. Ensure that the microphone and aircraft audio system are functional. If test fails, verify that an open circuit is applied to VHF 1 pin P1-14 (RX PORT A/B ENBL).
6.0	Set the 1 RTU reversionary switch to X-SIDE and press the 1/2 button on the right RTU (select COM 1). Repeat the radio check. If test fails, verify that a ground is applied from the 1 RTU reversionary switch to VHF 1 pin P1-14 (RX PORT A/B ENBL). If any of steps 4.0 through 6.0 failed, suspect the VHF 1 or an RTU. Swap VHF and RTU units as necessary to isolate the problem.
7.0	Set both RTU reversionary switches to X-SIDE and verify that the VHF 1 remains operational and tuned to the tower frequency. Repeat this step with both switches set to ENG DATA. If either test fails, verify that a ground is applied to VHF 1 pin P1-7 (BURST TUNE) and check the LB-GP BUS 3 data bus. Then set both switches to NORM.
8.0	Momentarily press the COM SQ button on the left RTU. Verify that the COM audio becomes noisy while the button is pressed. If test fails, suspect the RTU 1 or the VHF 1.
9.0	Simulcomm reduces VHF COM receiver sensitivity while the other VHF COM radio is transmitting. If a simulcomm problem is suspected, verify that a ground is applied to pin P1-21 (KEY) of the nontransmitting radio.

Table 5-65. VHF 2 Test Procedure.

STEP	PROCEDURE
	Note The two VHF's may be swapped with each other to verify aircraft wiring and to isolate a failed unit.
1.0	Check the AVIONICS STATUS page and troubleshoot according to table 5-3.
2.0	If the AVIONICS STATUS page indicates a VHF COMM ANT 2 fault, replace the number 2 COM antenna.
	Note When power is first applied to the VHF 2, a brief tone is applied to the aircraft audio system; if a continuous tone is heard, replace the VHF 2. If two short tones are heard (any time the VHF 2 is on), the radio has detected a fault; go to step 1.0.
3.0	Display the LRU DIAGNOSTIC DATA page showing the VHF COMM XCVR 2 word on the MFD. Select the COM mode page on the right RTU, then press and hold the TST line key. Verify that the VHF COMM XCVR 2 diagnostic word changes from 600002 to 400002, and then back to 600002 after the TST key is released. If middle digits are not zero, investigate the fault according to table 5-5.
4.0	Display the COM page on both CDU's. Use the right RTU and tune the COM 2 radio to a local ground control frequency. Verify that both CDU's and the right RTU display this frequency. The CDU's should show this frequency on the ACTIVE line and displayed in green.
5.0	Request a radio check from the tower and verify proper transmit and receive operation. Ensure that the microphone and aircraft audio system are functional. If test fails, verify that an open circuit is applied to VHF 2 pin P1-14 (RX PORT A/B ENBL).
6.0	Set the 2 RTU reversionary switch to X-SIDE and press the 1/2 button on the left RTU (select COM 2). Repeat the radio check. If test fails, verify that a ground is applied from the 2 RTU reversionary switch to VHF 2 pin P1-14 (RX PORT A/B ENBL). Then set reversionary switch to NORM. If any of steps 4.0 through 6.0 failed, suspect the VHF 2 or an RTU. Swap VHF and RTU units as necessary to isolate the problem.
7.0	Momentarily press the COM SQ button on the right RTU. Verify that the COM audio becomes noisy while the button is pressed. If test fails, suspect the RTU 2 or the VHF 2.
8.0	Simulcomm reduces VHF COM receiver sensitivity while the other VHF COM radio is transmitting. If a simulcomm problem is suspected, verify that a ground is applied to pin P1-21 (KEY) of the nontransmitting radio.

Table 5-66. RTU 1 Test Procedure.

STEP	PROCEDURE
	Note The two RTU's may be swapped with each other to verify aircraft wiring and to isolate a failed unit.
1.0	Check the AVIONICS STATUS page and troubleshoot according to table 5-3.
2.0	If the RTU 1 is completely dead, check circuit breakers and verify that that power is applied to pin P1-1/3. If power is present, replace RTU 1.
3.0	Set remote ATC switch to 1. Use the left RTU to tune the COM 1, VOR 1 (or LOC 1), ADF 1, and ATC 1 radios. Verify that each radio retunes by monitoring the proper mode page on the left CDU; the ACTIVE frequency on the CDU should be green and agree with that displayed on the RTU 1. If a radio will not retune, test that radio. If none of the (left side) radios retune, check the L-RTU-2 bus and swap RTU's to isolate the fault. If any knob, line key, PRE, or display function does not operate properly, replace the RTU 1.
4.0	Set the reversionary RAD RMT switch to NORM. Use the left CDU to retune the COM 1 radio. Verify that the left RTU displays the new COM 1 frequency. If the RTU does not respond, verify that +28 V dc is applied to pin P1-12 (RMT TUNE) and check the LA-GP BUS 1 and LB-GP BUS 2 input data buses. Set the reversionary RAD RMT switch to TUN DSBL. Repeat step 4.0 and verify that the RTU does not respond to a new frequency from the CDU. If test fails, verify that an open is applied to pin P1-12 (RMT TUNE). Then set reversionary switch to NORM.
5.0	Set the 1 RTU reversionary switch to X-SIDE and verify that the left RTU display blanks. If test fails, verify that a ground is applied to pin P1-9 (DSBL).
6.0	Set the 1 RTU reversionary switch to ENG DATA and verify that the left RTU displays two columns of engine data. If test fails, verify that a ground is applied to pin P1-39 (ENGINE DATA) and check the L-EDC-1 and R-EDC-1 input data buses. Then set reversion switch to NORM.
7.0	Set the 2 RTU reversionary switch to X-SIDE. Press the 1/2 button on the left RTU (select COM 2) and verify that the left RTU can now retune the right side radios. If test fails, verify that a ground is applied to pin P1-63 (XRTU DSBL), check the RB-GP BUS 2 input data bus, and check the L-RTU-1 output data bus. Then set reversion switch to NORM.
8.0	If a problem is suspected with any of the following external switches, test the radio using that function. If the test fails, verify wiring to the RTU as follows: MKR BCN switch applies an open (LO sensitivity) or a ground (HI sensitivity) to pin P1-61, either yoke IDENT button applies a momentary ground to pin P1-11, and the ATC switch applies a ground (1) or an open (2) to pin P1-13.
9.0	If a problem is suspected with any RTU pushbutton or annunciator, test the radio using that function. If the test fails, swap units to isolate the failed RTU or radio.

Table 5-67. RTU 2 Test Procedure.

STEP	PROCEDURE
	Note The two RTU's may be swapped with each other to verify aircraft wiring and to isolate a failed unit.
1.0	Check the AVIONICS STATUS page and troubleshoot according to table 5-3.
2.0	If the RTU 2 is completely dead, check circuit breakers and verify that that power is applied to pin P1-1/3. If power is present, replace RTU 2.
3.0	Set remote ATC switch to 2. Use the right RTU to tune the COM 2, VOR 2 (or LOC 2), ADF 2 (if installed), and ATC 2 radios. Verify that each radio retunes by monitoring the proper mode page on the right CDU; the ACTIVE frequency on the CDU should be green and agree with that displayed on the RTU 2. If a radio will not retune, test that radio. If none of the (right side) radios retune, check the R-RTU-2 bus and swap RTU's to isolate the fault. If any knob, line key, PRE, or display function does not operate properly, replace the RTU 2.
4.0	Set the reversionary RAD RMT switch to NORM. Use the right CDU to retune the COM 2 radio. Verify that the right RTU displays the new COM 2 frequency. If the RTU does not respond, verify that +28 V dc is applied to pin P1-12 (RMT TUNE) and check the RA-GP BUS 1 and RB-GP BUS 2 input data buses. Set the reversionary RAD RMT switch to TUN DSBL. Repeat step 4.0 and verify that the RTU does not respond to a new frequency from the CDU. If test fails, verify that an open is applied to pin P1-12 (RMT TUNE). Then set reversionary switch to NORM.
5.0	Set the 2 RTU reversionary switch to X-SIDE and verify that the right RTU display blanks. If test fails, verify that a ground is applied to pin P1-9 (DSBL).
6.0	Set the 2 RTU reversionary switch to ENG DATA and verify that the right RTU displays two columns of engine data. If test fails, verify that a ground is applied to pin P1-39 (ENGINE DATA) and check the L-EDC-2 and R-EDC-2 input data buses. Then set reversion switch to NORM.
7.0	Set the 1 RTU reversionary switch to X-SIDE. Press the 1/2 button on the right RTU (select COM 1) and verify that the right RTU can now retune the left side radios. If test fails, verify that a ground is applied to pin P1-63 (XRTU DSBL), check the LB-GP BUS 2 input data bus, and check the R-RTU-1 output data bus. Then set reversion switch to NORM.
8.0	If a problem is suspected with any of the following external switches, test the radio using that function. If the test fails, verify wiring to the RTU as follows: MKR BCN switch applies an open (LO sensitivity) or a ground (HI sensitivity) to pin P1-61, either yoke IDENT button applies a momentary ground to pin P1-11, and the ATC switch applies a ground (1) or an open (2) to pin P1-13.
9.0	If a problem is suspected with any RTU pushbutton or annunciator, test the radio using that function. If the test fails, swap units to isolate the failed RTU or radio.

Table 5-68. TDR 1 Test Procedure.

STEP	PROCEDURE
	Note The two TDR's and the two CAD's may be swapped with each other to verify aircraft wiring and to isolate a failed unit.
1.0	Check the AVIONICS STATUS page and troubleshoot according to table 5-3. Note that the TDR does not report to the AVIONICS STATUS page, but the CAD does report. Any faults detected by these diagnostics should be resolved before beginning this procedure.
2.0	Set remote ATC switch to 1. If necessary, press the ATC STBY button on the left RTU so that ATC (not STBY) appears on the ATC display line.
	Note Transponder operation may be verified with help from the local control tower. Delay 60 seconds after power-up before transmitting. Verify proper reply, altitude, and ident transmission at various ATC codes.
3.0	Display the LRU DIAGNOSTIC DATA page showing the XPONDER ADPTR 1 word on the MFD. Verify that the XPONDER ADPTR 1 diagnostic word is 600001 or 600105. If not, test CAD 1.
4.0	Select the ATC mode page on the left RTU. If necessary, press the ALT line key to display OFF ALT (mode A). Then press and hold the TST line key. Verify that the REPLY annunciator on the RTU lights and that the XPONDER ADPTR 1 diagnostic word is 600001. If not, verify that power is applied to TDR pin P1-59/55. If power is present, swap units and repeat test to isolate the failed CAD/TDR or wiring problem.
5.0	Press the ALT line key to display ON ALT (mode C). Then repeat step 4.0. If mode C test fails, swap units and repeat test to isolate the failed CAD/TDR or wiring problem.
6.0	Verify that the ALT display line on the ATC mode page shows a reasonable altitude. This is the uncorrected barometric altitude, and may not agree with the corrected barometric altitude displayed on ALI 1.
7.0	If a problem is suspected with the RTU transponder controls or with the TDR transmitter, operate each control and verify response with the local tower: Press the ATC STBY button to display STBY (not ATC), and verify that the TDR cannot transmit. Press this button again to display ATC; verify the TDR can now transmit mode A and mode C replies. Press the ATC ID button on the RTU (or IDENT button on control wheel) to "squawk ident."
8.0	If an L-band suppression problem is suspected, verify that a blanking pulse is applied from pin P1-21 when TDR 1 transmits.
9.0	If swapping units does not isolate a transponder problem, and aircraft wiring is correct, suspect the TDR 1 antenna.

Table 5-69. TDR 2 Test Procedure.

STEP	PROCEDURE
	Note The two TDR's and the two CAD's may be swapped with each other to verify aircraft wiring and to isolate a failed unit.
1.0	Check the AVIONICS STATUS page and troubleshoot according to table 5-3. Note that the TDR does not report to the AVIONICS STATUS page, but the CAD does report. Any faults detected by these diagnostics should be resolved before beginning this procedure.
2.0	Set remote ATC switch to 2. If necessary, press the ATC STBY button on the right RTU so that ATC (not STBY) appears on the ATC display line.
	Note Transponder operation may be verified with help from the local control tower. Delay 60 seconds after power-up before transmitting. Verify proper reply, altitude, and ident transmission at various ATC codes.
3.0	Display the LRU DIAGNOSTIC DATA page showing the XPONDER ADPTR 2 word on the MFD. Verify that the XPONDER ADPTR 2 diagnostic word is 600002 or 600106. If not, test CAD 2.
4.0	Select the ATC mode page on the right RTU. If necessary, press the ALT line key to display OFF ALT (mode A). Then press and hold the TST line key. Verify that the REPLY annunciator on the RTU lights and that the XPONDER ADPTR 2 diagnostic word is 600002. If not, verify that power is applied to TDR pin P1-59/55. If power is present, swap units and repeat test to isolate the failed CAD/TDR or wiring problem.
5.0	Press the ALT line key to display ON ALT (mode C). Then repeat step 4.0. If mode C test fails, swap units and repeat test to isolate the failed CAD/TDR or wiring problem.
6.0	Verify that the ALT display line on the ATC mode page shows a reasonable altitude. This is the uncorrected barometric altitude, and may not agree with the corrected barometric altitude displayed on ALI 2.
7.0	If a problem is suspected with the RTU transponder controls or with the TDR transmitter, operate each control and verify response with the local tower: Press the ATC STBY button to display STBY (not ATC), and verify that the TDR cannot transmit. Press this button again to display ATC; verify the TDR can now transmit mode A and mode C replies. Press the ATC ID button on the RTU (or IDENT button on control wheel) to "squawk ident."
8.0	If an L-band suppression problem is suspected, verify that a blanking pulse is applied from pin P1-21 when TDR 2 transmits.
9.0	If swapping units does not isolate a transponder problem and aircraft wiring is correct, suspect the TDR 2 antenna.

Table 5-70. CAD 1 Test Procedure.

STEP	PROCEDURE
	Note The two TDR's and the two CAD's may be swapped with each other to verify aircraft wiring and to isolate a failed unit.
1.0	Check the AVIONICS STATUS page and troubleshoot according to table 5-3.
2.0	If no faults are detected on the AVIONICS STATUS page and a transponder problem is suspected, first test the TDR 1. If the TDR tests normal, then continue with this procedure.
3.0	Set the ATC remote switch to 1. Set the 1 RTU reversionary switch to NORM.
4.0	Display the LRU DIAGNOSTIC DATA page showing the XPONDER ADPTR 1 word on the MFD. Verify that the XPONDER ADPTR 1 diagnostic word is 600001 or 600105. If not, replace CAD 1.
5.0	Select the ATC mode page on the left RTU. If necessary, press the ALT line key to display OFF ALT (mode A). Then press and hold the TST line key. Verify that the REPLY annunciator on the RTU lights and that the XPONDER ADPTR 1 diagnostic word is 600001. If test fails, check the (mode A) CAD/TDR wiring. Verify that a ground is applied from CAD pin P1-49 to TDR pin P1-45 (ON/STBY). During test, verify that a ground is applied from CAD pin P1-29 to TDR pin P1-13 (TEST) and that a ground is applied from TDR pin P1-17 to CAD pin P1-40 (REPLY).
6.0	Press the ALT line key to display ON ALT (mode C). Then repeat step 5.0. If test fails, check the (mode C) CAD/TDR wiring and verify that a ground is applied from CAD pin P1-16 to TDR pin P1-46 (MODE SEL C).
7.0	Set the 1 RTU reversionary switch to X-SIDE and press the 1/2 button on the right RTU (select ATC 1). Press the TST line key and verify that the REPLY annunciator lights. If test fails, verify that a ground is applied from the 1 RTU reversionary switch to CAD 1 pin P1-43 (RX PORT A/B SELECT). Then set reversionary switch to NORM.
8.0	If an ident problem is suspected, verify that +5 V dc is applied from CAD pin P1-25 to TDR P1-5 when the ATC ID button or control wheel IDENT switch is pressed.

Table 5-71. CAD 2 Test Procedure.

STEP	PROCEDURE
	Note The two TDR's and the two CAD's may be swapped with each other to verify aircraft wiring and to isolate a failed unit.
1.0	Check the AVIONICS STATUS page and troubleshoot according to table 5-3.
2.0	If no faults are detected on the AVIONICS STATUS page and a transponder problem is suspected, first test the TDR 2. If the TDR tests normal, then continue with this procedure.
3.0	Set the ATC remote switch to 2. Set the 2 RTU reversionary switch to NORM.
4.0	Display the LRU DIAGNOSTIC DATA page showing the XPONDER ADPTR 2 word on the MFD. Verify that the XPONDER ADPTR 2 diagnostic word is 600002 or 600106. If not, replace CAD 2.
5.0	Select the ATC mode page on the right RTU. If necessary, press the ALT line key to display OFF ALT (mode A). Then press and hold the TST line key. Verify that the REPLY annunciator on the RTU lights and that the XPONDER ADPTR 2 diagnostic word is 600002. If test fails, check the (mode A) CAD/TDR wiring. Verify that a ground is applied from CAD pin P1-49 to TDR pin P1-45 (ON/STBY). During test, verify that a ground is applied from CAD pin P1-29 to TDR pin P1-13 (TEST) and that a ground is applied from TDR pin P1-17 to CAD pin P1-40 (REPLY).
6.0	Press the ALT line key to display ON ALT (mode C). Then repeat step 5.0. If test fails, check the (mode C) CAD/TDR wiring and verify that a ground is applied from CAD pin P1-16 to TDR pin P1-46 (MODE SEL C).
7.0	Set the 2 RTU reversionary switch to X-SIDE and press the 1/2 button on the left RTU (select ATC 2). Press the TST line key and verify that the REPLY annunciator lights. If test fails, verify that a ground is applied from the 2 RTU reversionary switch to CAD 2 pin P1-43 (RX PORT A/B SELECT). Then set reversionary switch to NORM.
8.0	If an ident problem is suspected, verify that +5 V dc is applied from CAD pin P1-25 to TDR P1-5 when the ATC ID button or control wheel IDENT switch is pressed.

Table 5-72. VIR 1 Test Procedure.

STEP	PROCEDURE
	Note The two VIR's may be swapped with each other to verify aircraft wiring and to isolate a failed unit.
1.0	Check the AVIONICS STATUS page and troubleshoot according to table 5-3.
2.0	Tune the VIR 1 to a VOR frequency such as 117.00 MHz using the left RTU. Select VOR 1 as the active NAV source and as the bearing pointer source using the left CDU. Select VOR 1 format on the left SDU. Set 0-degree course on both the ND 1 and SDU 1.
	Note The VIR 1 supplies NAV data to the ND 1/PFD 1 (through IAPS) on the L-VIR-1 bus, and to the SDU 1 (through SDD) on the L-VIR-2 bus. If NAV data is not displayed, check the appropriate bus.
3.0	Select the NAV mode page on the left RTU. Then press and hold the TST line key. On the ND 1 verify that the deviation bar zeros, TO indicates, and the bearing pointer is at 0 degree. On the left SDU verify that the deviation bar zeros, TO indicates, and that the marker beacon box annunciates and flashes. On the PFD 1 verify that the marker beacon annunciations appear and cycle. A marker beacon tone should be audible.
4.0	Tune the VIR 1 to a LOC frequency such as 110.10 MHz using the left RTU. Verify that GS and LOC scales are displayed on the PFD 1.
5.0	Select the NAV mode page on the left RTU. Then press and hold the TST line key. On the PFD 1, ND 1, and SDU 1 verify that GS deviation is 2/3 of full-scale down and that LOC (lateral) deviation is 2/3 of full-scale right. Marker beacon indications are as stated in step 3.0.
6.0	Tune the VIR 1 to a local VOR frequency using the left RTU and zero the course deviation on both the ND 1 and SDU 1. Verify NAV audio ident. Verify that course indications on the ND and SDU agree and are reasonable. If test fails, verify that an open circuit is applied to VIR 1 pin P1-31 (RX PORT A/B ENBL).
7.0	Set the 1 RTU reversionary switch to X-SIDE and press the 1/2 button on the right RTU (select VOR 1). Verify that course indications remain correct. If not correct, verify that a ground is applied from the 1 RTU reversionary switch to VIR 1 pin P1-31 (RX PORT A/B ENBL).
8.0	Set both RTU reversionary switches to X-SIDE and verify that the VIR 1 remains operational and course indications are correct. Repeat this step with both switches set to ENG DATA. If either test fails, verify that a ground is applied to VIR 1 pin P2-8 (BURST TUNE) and check the LB-GP BUS 3 data bus. Then set both switches to NORM.
9.0	If a problem is suspected with the VOR/LOC, GS, or MB receivers, inject valid signals into the antenna inputs to isolate a receiver/antenna fault. A ramp tester is required to test marker beacon sensitivity.

Table 5-73. VIR 2 Test Procedure.

STEP	PROCEDURE
	Note The two VIR's may be swapped with each other to verify aircraft wiring and to isolate a failed unit.
1.0	Check the AVIONICS STATUS page and troubleshoot according to table 5-3.
2.0	Tune the VIR 2 to a VOR frequency such as 117.00 MHz using the right RTU. Select VOR 2 as the active NAV source and as the bearing pointer source using the right CDU. Select VOR 2 format on the right (or left) SDU. Set 0-degree course on both the ND 2 and SDU. **Note** The VIR 2 supplies NAV data to the ND 2/PFD 2 (through IAPS) on the R-VIR-1 bus, and to the SDU (through SDD) on the R-VIR-2 bus. If NAV data is not displayed, check the appropriate bus.
3.0	Select the NAV mode page on the right RTU. Then press and hold the TST line key. On the ND 2 verify that the deviation bar zeros, TO indicates, and the bearing pointer is at 0 degree. On the SDU verify that the deviation bar zeros, TO indicates, and that the marker beacon box annunciates and flashes. On the PFD 2 verify that the marker beacon annunciations appear and cycle. A marker beacon tone should be audible.
4.0	Tune the VIR 2 to a LOC frequency such as 110.10 MHz using the right RTU. Verify that GS and LOC scales are displayed on the PFD 2.
5.0	Select the NAV mode page on the right RTU. Then press and hold the TST line key. On the PFD 2, ND 2, and SDU verify that GS deviation is two-thirds of full-scale down and that LOC (lateral) deviation is two-thirds of full-scale right. Marker beacon indications are as stated in step 3.0.
6.0	Tune the VIR 2 to a local VOR frequency using the right RTU and zero the course deviation on both the ND 2 and SDU. Verify NAV audio ident. Verify that course indications on the ND and SDU agree and are reasonable. If test fails, verify that an open circuit is applied to VIR 2 pin P1-31 (RX PORT A/B ENBL).
7.0	Set the 2 RTU reversionary switch to X-SIDE and press the 1/2 button on the left RTU (select VOR 2). Verify that course indications remain correct. If not correct, verify that a ground is applied from the 2 RTU reversionary switch to VIR 2 pin P1-31 (RX PORT A/B ENBL). Then set switch to NORM.
8.0	If a problem is suspected with the VOR/LOC, GS, or MB receivers, inject valid signals into the antenna inputs to isolate a receiver/antenna fault. A ramp tester is required to test marker beacon sensitivity.

Table 5-74. DME 1 Test Procedure.

STEP	PROCEDURE
	Note The two DME's may be swapped with each other to verify aircraft wiring and to isolate a failed unit.
1.0	Check the AVIONICS STATUS page and troubleshoot according to table 5-3.
2.0	Tune the VIR 1 (and DME 1) to a VOR frequency such as 117.00 MHz using the left RTU. Select VOR 1 as the active NAV source using the left CDU. Select DME format on the left SDU; monitor column 1 display data.
	Note The DME 1 supplies NAV data to the ND 1 (through IAPS) on the L-DME-1 bus, and to the SDU 1 (through SDD) on the L-DME-2 bus. If DME data is not displayed, check the appropriate bus.
3.0	Select the NAV mode page on the left RTU. Then press and hold the TST line key. On the ND 1 verify that ground speed is GS 100, time-to-go is TTG 1:00, distance is 100 NM, and station ident is AOK. On the left SDU verify that distance is 100 NM and that AOK is displayed instead of a frequency or station ident. Verify that DME audio ident is AOK.
4.0	Tune the VIR 1 (and DME 1) to a local VOR frequency using the left RTU. Verify that the distance indications on the ND 1 and SDU 1 agree and are reasonable. If test fails, verify that an open circuit is applied to DME 1 pin P1-42 (RX PORT A/B ENBL).
5.0	Set the 1 RTU reversionary switch to X-SIDE and press the 1/2 button on the right RTU (select VOR 1). Verify that distance indications remain correct. If not correct, verify that a ground is applied from the 1 RTU reversionary switch to DME 1 pin P1-42 (RX PORT A/B ENBL). Then set switch to NORM.
6.0	Press the DME HLD button on the left RTU, and verify that DME HOLD annunciates on the RTU 1 and that HOLD annunciates on the SDU 1. Verify that the VOR 1 frequency displayed on the RTU is the same as the frequency (or corresponding station ident) displayed on the SDU. Note this frequency.
7.0	Tune the VIR 1 to a different frequency using the left RTU. Select the NAV mode page on the RTU and verify that the HOLD frequency displayed on both the RTU and on the SDU is the same as that noted in step 6.0. Then press the DME HLD button and verify that the DME retunes to the new frequency.
8.0	If an L-band suppression problem is suspected, verify that a blanking pulse is applied from pin P1-14 when DME 1 transmits.

Table 5-75. DME 2 Test Procedure.

STEP	PROCEDURE
	Note The two DME's may be swapped with each other to verify aircraft wiring and to isolate a failed unit.
1.0	Check the AVIONICS STATUS page and troubleshoot according to table 5-3.
2.0	Tune the VIR 2 (and DME 2) to a VOR frequency such as 117.00 MHz using the right RTU. Select VOR 2 as the active NAV source using the right CDU. Select DME format on the right (or left) SDU; monitor column 2 display data.
	Note The DME 2 supplies NAV data to the ND 2 (through IAPS) on the R-DME-1 bus, and to the SDU (through SDD) on the R-DME-2 bus. If DME data is not displayed, check the appropriate bus.
3.0	Select the NAV mode page on the right RTU. Then press and hold the TST line key. On the ND 2 verify that ground speed is GS 100, time-to-go is TTG 1:00, distance is 100 NM, and station ident is AOK. On the SDU verify that distance is 100 NM and that AOK is displayed instead of a frequency or station ident. Verify that DME audio ident is AOK.
4.0	Tune the VIR 2 (and DME 2) to a local VOR frequency using the right RTU. Verify that the distance indications on the ND 2 and SDU agree and are reasonable. If test fails, verify that an open circuit is applied to DME 2 pin P1-42 (RX PORT A/B ENBL).
5.0	Set the 2 RTU reversionary switch to X-SIDE and press the 1/2 button on the left RTU (select VOR 2). Verify that distance indications remain correct. If not correct, verify that a ground is applied from the 2 RTU reversionary switch to DME 2 pin P1-42 (RX PORT A/B ENBL). Then set switch to NORM.
6.0	Press the DME HLD button on the right RTU, and verify that DME HOLD annunciates on the RTU 2 and that HOLD annunciates on the SDU. Verify that the VOR 2 frequency displayed on the RTU is the same as the frequency (or corresponding station ident) displayed on the SDU. Note this frequency.
7.0	Tune the VIR 2 to a different frequency using the right RTU. Select the NAV mode page on the RTU and verify that the HOLD frequency displayed on both the RTU and on the SDU is the same as that noted in step 6.0. Then press the DME HLD button and verify that the DME retunes to the new frequency.
8.0	If an L-band suppression problem is suspected, verify that a blanking pulse is applied from pin P1-14 when DME 2 transmits.

Table 5-76. ADF 1 Test Procedure.

STEP	PROCEDURE
	Note If two ADF's are installed, they may be swapped with each other to verify aircraft wiring and to isolate a failed unit.
1.0	Check the AVIONICS STATUS page and troubleshoot according to table 5-3.
2.0	Select ADF 1 (or ADF, if only one ADF is installed) as the bearing pointer source using the left CDU. Select RMI format on the left SDU and then select ADF 1 (or ADF) as the single-bar bearing pointer source.
3.0	Select the ADF mode page on the left RTU and press the ADF line key (select ADF mode).
	Note The ADF 1 supplies bearing data to the ND 1 (through IAPS) on the L-ADF-1 bus, and to the SDU (through SDD) on the L-ADF-2 bus. If bearing data is not displayed, check the appropriate bus.
4.0	Tune the ADF 1 to a local AM radio station using the left RTU. Verify that the bearing pointer on the ND 1 and on the SDU both indicate a reasonable bearing to the tuned station. Verify AM audio reception. If test fails, verify that an open circuit is applied to ADF 1 pin P1-5 (RX PORT A/B ENBL). Then go to step 6.0.
5.0	Select the ADF mode page on the left RTU and press the ANT line key (select ANT mode). Verify that the bearing pointers disappear, but that audio is still received. Then reselect ADF mode and verify that the pointers reappear.
6.0	Display the LRU DIAGNOSTIC DATA page showing the ADF RECEIVER 1 word on the MFD. Press and hold the ADF TEST button. Verify that the bearing pointers rotate 90 degrees, and that the ADF RECEIVER 1 diagnostic word is 400001. Release the button and verify that the pointers return to the pretest bearing indication and the diagnostic word is 600001. If ADF 1 will not tune to a local station or if self-test fails, refer to table 5-5 and investigate the internal ADF fault code (part of the diagnostic word). If the code indicates normal antenna power and a low input signal level, test the ANT-462A/B. If the antenna tests normal, replace the ADF 1.
7.0	Set the 1 RTU reversionary switch to X-SIDE and press the 1/2 button on the right RTU (select ADF 1). Verify that bearing pointer indications remain correct. If not correct, verify that a ground is applied from the 1 RTU reversionary switch to ADF 1 pin P1-5 (RX PORT A/B ENBL). Then set switch to NORM.
8.0	If a problem is suspected with BFO reception, select ON BFO mode using the left RTU. The ADF 1 provides a 1000-Hz aural output tone when receiving a keyed CW signal.

Table 5-77. ADF 2 Test Procedure.

STEP	PROCEDURE
	Note The ADF 2 is an optional unit. If two ADF's are installed, they may be swapped with each other to verify aircraft wiring and to isolate a failed unit.
1.0	Check the AVIONICS STATUS page and troubleshoot according to table 5-3.
2.0	Select ADF 2 as the bearing pointer source using the right CDU. Select RMI format on the right (or left) SDU and then select ADF 2 as the dual-bar bearing pointer source.
3.0	Select the ADF mode page on the right RTU and press the ADF line key (select ADF mode).
	Note The ADF 2 supplies bearing data to the ND 2 (through IAPS) on the R-ADF-1 bus, and to the SDU (through SDD) on the R-ADF-2 bus. If bearing data is not displayed, check the appropriate bus and the ADF 2 strap selects as follows. Check the STRAPPING OPTION word on the LRU DIAGNOSTIC DATA page, and verify that bit 14 is set. Verify that SDD pin P2-17 (ADF 2) is strapped to ground.
4.0	Tune the ADF 2 to a local AM radio station using the right RTU. Verify that the bearing pointer on the ND 2 and on the SDU both indicate a reasonable bearing to the tuned station. Verify AM audio reception. If test fails, verify that an open circuit is applied to ADF 2 pin P1-5 (RX PORT A/B ENBL). Then go to step 6.0.
5.0	Select the ADF mode page on the right RTU and press the ANT line key (select ANT mode). Verify that the bearing pointers disappear, but that audio is still received. Then reselect ADF mode and verify that the pointers reappear.
6.0	Display the LRU DIAGNOSTIC DATA page showing the ADF RECEIVER 2 word on the MFD. Press and hold the ADF TEST button. Verify that the bearing pointers rotate 90 degrees, and that the ADF RECEIVER 2 diagnostic word is 400002. Release the button and verify that the pointers return to the pretest bearing indication and the diagnostic word is 600002. If ADF 2 will not tune to a local station or if self-test fails, refer to table 5-5 and investigate the internal ADF fault code (part of the diagnostic word). If the code indicates normal antenna power and a low input signal level, test the ANT-462B. If the antenna tests normal, replace the ADF 2.
7.0	Set the 2 RTU reversionary switch to X-SIDE and press the 1/2 button on the left RTU (select ADF 2). Verify that bearing pointer indications remain correct. If not correct, verify that a ground is applied from the 2 RTU reversionary switch to ADF 2 pin P1-5 (RX PORT A/B ENBL). Then set switch to NORM.
8.0	If a problem is suspected with BFO reception, select ON BFO mode using the right RTU. The ADF 2 provides a 1000-Hz aural output tone when receiving a keyed CW signal.

Table 5-78. ANT-462A/B Test Procedure.

STEP	PROCEDURE
	Note The ANT-462A is used when only one ADF receiver is installed in the aircraft. An ADF-462B is a dual antenna that is used when two ADF's are installed.
1.0	Check the AVIONICS STATUS page and troubleshoot according to table 5-3. Note that the ANT-462A/B does not report to the AVIONICS STATUS page, but any faults detected by these diagnostics should be resolved before beginning this procedure.
2.0	Test the ADF receiver(s) before beginning this procedure. Be sure to tune an AM station that uses a nearby transmitting tower, and move away from possible interference sources. If each ADF passes its test procedure, then the ANT-462A/B is operational.
3.0	If two ADF's are installed and only one of them passes its test procedure, swap receivers to isolate the failed ADF/ANT or wiring problem.
4.0	Select the ADF mode page on the left RTU and press the ADF line key (select ADF mode). Verify the ADF 1/ ANT interface as follows.
	+15 V dc on ADF 1 pin P1-9 (ANT B+).
	-12 V dc on ADF 1 pin P1-17 (LOOP B-); present only in ADF mode.
	Voltage activity on ADF 1 pins P1-37 (SIN MOD) and P1-41 (COS MOD) as the receiver is retuned to a valid local frequency.
	Select ANT mode. Connect a wire to the A1 coax input jack of the receiver and verify AM audio reception. Then select ADF mode.
	If any of these steps fail, replace the ADF 1. If all steps pass, check the aircraft wiring to the antenna. If wiring is correct, replace the ANT-462A/B.
5.0	If two ADF receivers are installed, repeat step 4.0 using the right RTU to select modes for the right ADF. Verify the ADF 2/ANT interface by checking the same pins specified above, but on the ADF 2 receiver. If any steps fail, replace the ADF 2. If all steps pass, check the aircraft wiring to the antenna. If wiring is correct, replace the ANT-462B.

Table 5-79. ALT (and ANT-52's) Test Procedure.

STEP	PROCEDURE
	Note The ALT and the RAC must both be operational to provide radio altitude information to other avionics units.
1.0	Check the AVIONICS STATUS page and troubleshoot according to table 5-3.
2.0	If the AVIONICS STATUS page shows a RADIO ALTIMETER fault, check the circuit breaker and verify that power is applied to ALT pin P1-9.
3.0	Verify that approximately 0-foot radio altitude is indicated on both of the PFD's. If the radio altitude is not 0-foot while on the runway, check the AID altimeter strapping or suspect the ANT-52 antennas (low failure rate).
4.0	Press and hold the RA TEST button on either AAP. Verify that 50-foot radio altitude is displayed on both PFD's. If the test fails, verify that a ground is applied from AAP pin P1-3 to RAC pin P1-40 and that a ground is applied from RAC pin P1-29 to ALT pin P1-25 while the RA TEST button is pressed. If a ground is missing, the ALT is not in test mode; check aircraft wiring and replace the failed unit. Verify that the voltage differential at ALT pin P1-57 to P1-59 is +10.4 V dc while the RA TEST button is pressed. If voltage is correct, test the RAC. If voltage is not correct, replace the ALT.

Table 5-80. RAC Test Procedure.

STEP	PROCEDURE
	Note The RAC and the ALT must both be operational to provide radio altitude information to other avionics units.
1.0	Check the AVIONICS STATUS page and troubleshoot according to table 5-3.
2.0	If the AVIONICS STATUS page shows a RAD ALTMR ADPTR fault, check the circuit breaker and verify that RAC power is supplied from the ALT as follows: +28 V dc is applied from ALT pin P1-6 to RAC pin P1-17; -15 V dc is applied from ALT pin P1-51 to RAC pin P1-31. If power is present, replace the RAC.
3.0	Test the ALT before beginning this procedure. If the ALT tests normal, the RAC is also normal.
4.0	If the (altimeter) RA TEST fails, verify that the voltage differential at RAC pin P1-34 to P1-1 is +10.4 V dc while the RA TEST button is pressed. If voltage is correct, replace the RAC. If voltage is not correct, check the ALT/RAC wiring.
5.0	If an FCS WARN problem is suspected, verify that an open circuit is applied from ALT pin P1-8 to RAC pin P1-23 when radio altitude is off-scale or when in test mode.

Table 5-81. CMA (and VLF-ANT) Test Procedure.

STEP	PROCEDURE
	Note The CMA and the VLF-ANT must both be operational to provide VLF information to the FMS navigator.
1.0	Check the AVIONICS STATUS page and troubleshoot according to table 5-3.
2.0	If the AVIONICS STATUS page shows a VLF RECEIVER 1 fault, check the circuit breaker and verify that power is applied to CMA pin P1C-2.
3.0	Display the LRU DIAGNOSTIC DATA page showing the VLF RECEIVER 1 word on the MFD. If the diagnostic word is 600001, then the CMA and VLF-ANT are both operational. If the word is not 600001, refer to table 5-5 and investigate the fault.
	If bit 20 or 21 is set, check the RB-GP BUS 2 or LB-GP BUS 2 input data bus to the CMA.
	If any of bits 23 through 29 are set (except for bit 26), then replace the CMA. These bits note failures detected during internal self-test.
	If bit 26 is set, check the E-field antenna input to the CMA. If wiring is correct, replace the VLF-ANT.
	Note The CMA supplies VLF data to the FMS on the L-VLF-1 bus, and to the SDU (through the SDD) on the L-VLF-2 bus. If VLF data is not displayed, check the appropriate bus.
4.0	Press the IDX, FMS, and then the VLF/OMEGA STATUS line key on the MFD. Verify that the VLF/OMEGA STATUS page displays. If the page is blank, check the L-VLF-1 bus.
5.0	Select VLF format on the left SDU and verify that the "VLF" format annunciator is not crossed out. If the VLF annunciation is displayed with an "X" through it (and diagnostics are valid), check the L-VLF-2 bus.

Table 5-82. RTA Test Procedure.

STEP	PROCEDURE
	Warning The area within the scan arc and within 0.65 metre (2 feet) of an operating RTA can be a hazardous area. Do not operate the RTA in any mode other than STBY or TEST when the antenna might scan over personnel within that range. Never turn the transmitter on within the hangar. FAA Advisory Circular 20-68B provides additional details on the radiation hazards associated with ground operation of airborne weather radar.
1.0	Check the AVIONICS STATUS page and troubleshoot according to table 5-3. Note that the RTA reports diagnostics through the ND displays. The WXT-1 output bus from the RTA is applied to the ND's (and MFD). The ND 1 then provides a WEATHER RADAR A word and the ND 2 provides a WEATHER RADAR B word to the diagnostic system. If an ND fails, the system stops monitoring that A or B diagnostic word.
2.0	If the AVIONICS STATUS page shows an RTA no data fault, check the circuit breaker and verify that power is applied to RTA pins P1-17, 18, and 36. Also verify that the WXT-1 output bus to the displays is active.
3.0	Press the RDR key on both CDU's to select radar display on both ND's. Press the RADAR line key (on IDX page) to select radar display on the MFD. Select CHANNEL SYNC and STBY mode on the left CDU.
4.0	Using the left CDU, rotate the RANGE knob and verify range matching on all three displays. Then press the RDR CONTROL page key and select TEST MODE ON (page 2). Verify that the radar test pattern is displayed across the full sector of all three displays. If the test fails, check the L-CDU-1 and LB-GP BUS 3 data buses which provide control head information from the CDU 1 to the IAPS and then to the RTA.
5.0	Repeat step 4.0 using the right CDU. If the test fails, check the R-CDU-1 and RB-GP BUS 3 data buses which supply right side control functions.
6.0	Display the LRU DIAGNOSTIC DATA page showing the WEATHER RADAR A word on the MFD. Refer to table 5-5. Select various RTA control head functions on CDU 1 and verify operation as follows: bit 11 sets when CHANNEL SYNC is selected, bit 12 sets when AUTOTILT is ON, bit 16 sets when GND CLTR SPRS is ON, bit 26 sets when STABILIZATION is ON, and bits 27 through 29 set according to the selected RTA mode.
7.0	Tow the aircraft outside and remove the radome. Select WX or GND MAP mode, and from a distance verify smooth scan and tilt mechanical motion. Verify that a target displays. Select MAN GAIN and verify that target size/intensity changes as gain changes (GAIN + causes an increase). Select HOLD ON, verify that display pattern freezes, and then select HOLD OFF. Select STBY mode, remove aircraft power, and reinstall the radome. If necessary, clean and lubricate the RTA according to the periodic inspection and maintenance procedure provided in this section.

Table 5-83. EDC 1 Test Procedure.

STEP	PROCEDURE
	Note The two EDC's may be swapped with each other to verify aircraft wiring and to isolate a failed unit. Do not leave the EDC's swapped; torque adjustments are specifically set for each engine/EDC combination.
1.0	Check the AVIONICS STATUS page and troubleshoot according to table 5-3. Note that the EDC 1 reports diagnostics through both channels of the DAU. The L-EDC-1 output bus from EDC 1 is applied to DAU channel A; the DAU then provides an EDC CONC 1A word to the diagnostic system. The L-EDC-2 output bus from EDC 1 is applied to DAU channel B; the DAU then provides an EDC CONC 1B word to the diagnostic system. If a DAU channel fails, the system stops monitoring that 1A or 1B diagnostic word.
2.0	If the AVIONICS STATUS page shows an EDC CONC 1A or EDC CONC 1B fault, check the circuit breakers and verify that power is applied to EDC 1 pins P1-52 and P2-52. The EDC channel B circuit breakers are located aft in the aircraft fuselage, between the engine nacelles.
3.0	Display the LRU DIAGNOSTIC DATA page showing the EDC CONC 1A and EDC CONC 1B words on the MFD. Both diagnostic words should be 600001. If the words are not 600001, refer to table 5-5 and investigate the fault.
4.0	Set the 1 RTU reversionary switch to ENG DATA and verify that the left RTU displays two columns of engine data. If the left column is dashed, verify L-EDC-1 bus activity at the input of the left RTU; if present, test the RTU 1. If the right column is dashed, test the EDC 2. Then set reversion switch to NORM.
5.0	Set the 2 RTU reversionary switch to ENG DATA and verify that the right RTU displays two columns of engine data. If the left column is dashed, verify L-EDC-2 bus activity at the input of the right RTU; if present, test the RTU 2. If the right column is dashed, test the EDC 2. Then set reversion switch to NORM.
6.0	If a problem is suspected in the aircraft wiring to the EDC 1, then swap EDC's to isolate the failed EDC or engine/aircraft discrete input. If the EICAS and RTU engine data displays do not change after the concentrators are swapped, the EDC's are probably operational; troubleshoot the aircraft wiring. Reinstall the EDC's in their original locations.
7.0	An alternate way to verify basic EDC operation is to start the aircraft engines and watch the engine gauges on the EICAS and RTU reversion displays. If the gauges show reasonable indications and no CAS alerts, the EDC's are probably operational.

Table 5-84. EDC 2 Test Procedure.

STEP	PROCEDURE
	Note The two EDC's may be swapped with each other to verify aircraft wiring and to isolate a failed unit. Do not leave the EDC's swapped; torque adjustments are specifically set for each engine/EDC combination.
1.0	Check the AVIONICS STATUS page and troubleshoot according to table 5-3.
	Note that the EDC 2 reports diagnostics through both channels of the DAU. The R-EDC-1 output bus from EDC 2 is applied to DAU channel A; the DAU then provides an EDC CONC 2A word to the diagnostic system. The R-EDC-2 output bus from EDC 2 is applied to DAU channel B; the DAU then provides an EDC CONC 2B word to the diagnostic system. If a DAU channel fails, the system stops monitoring that 2A or 2B diagnostic word.
2.0	If the AVIONICS STATUS page shows an EDC CONC 2A or EDC CONC 2B fault, check the circuit breakers and verify that power is applied to EDC 2 pins P1-52 and P2-52. The EDC channel B circuit breakers are located aft in the aircraft fuselage, between the engine nacelles.
3.0	Display the LRU DIAGNOSTIC DATA pages showing the EDC CONC 2A and EDC CONC 2B words on the MFD. Both diagnostic words should be 600002. If the words are not 600002, refer to table 5-5 and investigate the fault.
4.0	Set the 1 RTU reversionary switch to ENG DATA and verify that the left RTU displays two columns of engine data. If the right column is dashed, verify R-EDC-1 bus activity at the input of the left RTU; if present, test the RTU 1. If the left column is dashed, test the EDC 1. Then set reversion switch to NORM.
5.0	Set the 2 RTU reversionary switch to ENG DATA and verify that the right RTU displays two columns of engine data. If the right column is dashed, verify R-EDC-2 bus activity at the input of the right RTU; if present, test the RTU 2. If the left column is dashed, test the EDC 1. Then set reversion switch to NORM.
6.0	If a problem is suspected in the aircraft wiring to the EDC 2, then swap EDC's to isolate the failed EDC or engine/aircraft discrete input. If the EICAS and RTU engine data displays do not change after the concentrators are swapped, the EDC's are probably operational; troubleshoot the aircraft wiring. Reinstall the EDC's in their original locations.
7.0	An alternate way to verify basic EDC operation is to start the aircraft engines and watch the engine gauges on the EICAS and RTU reversion displays. If the gauges show reasonable indications and no CAS alerts, the EDC's are probably operational.

Table 5-85. DAU Test Procedure.

STEP	PROCEDURE
	Note Note that the DAU is a 2-channel redundant unit. Both channels report to the diagnostic system. If either channel fails, replace the DAU.
1.0	Check the AVIONICS STATUS page and troubleshoot according to table 5-3.
2.0	Display the LRU DIAGNOSTIC DATA pages showing the DATA ACQ UNIT A and DATA ACQ UNIT B words on the MFD. Both diagnostic words should be 600000. If the words are not 600000, refer to table 5-5 and investigate the fault.
3.0	Verify that gauges are displayed on the EICAS.
4.0	If a problem is suspected with the DAU discrete caution/warn outputs, verify annunciations and aural warnings as follows. Press the ANNUN test button and verify that the MASTER CAUTION annunciators on the glareshield light. Press the VMO/MMO test button and verify that an overspeed warn tone is audible. Engage the autopilot. Then press the AP DISC button on either yoke and verify a disconnect warn tone is audible. Press the ALT SEL switch on the left ALI and verify that a preselect altitude tone is audible.
5.0	If a problem is suspected with the aircraft wiring to the DAU, refer to the system schematic and check each discrete input.
6.0	Instructions for using an EDC simulator to isolate engine/avionics problems will be provided when available.

ADDENDUM 2

TO

STARSHIP 1 AVIONICS SYSTEM

SYSTEM MANUAL

PART NUMBER 523-0774076, DATED 14 JAN 1989

Insert this addendum sheet facing page 5-164 of the Maintenance Section of the manual

Discrete logic from various aircraft sensors, switches, and monitors is input to the Collins avionics system through the EDC-850's and the DAU-850. These units encode the discrete information onto ARINC 429 serial buses, and transmit this data to the EICAS display (ECD-870).

This addendum adds tables 5-86 and 5-87 to help a technician interpret and troubleshoot the EICAS messages.

Table 5-86 is a complete list of the EICAS messages. This table provides a description of each message and the logic conditions (terms) which will toggle that message.

Table 5-87 is a complete list of the discrete inputs applied to the EDC's and DAU. This table lists the encoding LRU, rear connector pin number, high/low input logic levels, and the octal label/bit number assigned to each discrete input. This table also relates each logic term used in table 5-86 to a voltage at a specific EDC/DAU rear connector pin, and to a bit-location on an EDC/DAU output data bus.

Insert this page and all sheets of (added) tables 5-86 and 5-87 at the end of section 5, just after the last 1-page/unit test procedure.

Table 5-86. Description of CAS Messages Displayed on ECD-870

MESSAGE	MEANING (INPUT LOGIC, SEE TABLE 5-87)
	CAUTION MESSAGES (YELLOW)
L GEN INOP	Left generator is off-line and the engine is not secured. (L.GEN.OUT=0 and L.ENG.SCRD=0)
R GEN INOP	Right generator is off-line and the engine is not secured. (R.GEN.OUT=0 and R.ENG.SCRD=0)
L ICE VANE FAIL	Left engine ice vane has failed to reach proper position within 30 seconds. (L.ICE.SEL=0 and L.IVAN.RET=0 and SD=30) or (L.ICE.SEL=1 and L.IVAN.EXT=0 and SD=30)
R ICE VANE FAIL	Right engine ice vane has failed to reach proper position within 30 seconds. (R.ICE.SEL=0 and R.IVAN.RET=0 and SD=30) or (R.ICE.SEL=1 and R.IVAN.EXT=0 and SD=30)
L F/W VALVE FAIL	Left firewall fuel valve has failed to reached selected position within 2 seconds. (L.FVAL.SEL=0 and L.FVAL.POS=1 and SD=2) or (L.FVAL.SEL=1 and L.FVAL.POS=0 and SD=2)
R F/W VALVE FAIL	Right firewall fuel valve has failed to reach selected position within 2 seconds. (R.FVAL.SEL=0 and R.FVAL.POS=1 and SD=2) or (R.FVAL.SEL=1 and R.FVAL.POS=0 and SD=2)
L GEN TIE OPEN	Left generator bus tie is open. (L.GEN.TIE=0)
R GEN TIE OPEN	Right generator bus tie is open. (R.GEN.TIE=0)
L WHEELWELL OVHT	Left wheelwell is overheated. (L.WHL.TMP=1)
R WHEELWELL OVHT	Right wheelwell is overheated. (R.WHL.TMP=1)
L BLEED OFF	Left bleed valve is closed. (L.BLD.VAL=0)
R BLEED OFF	Right bleed valve is closed. (R.BLD.VAL=0)
L FUEL LEVEL LO	Left wing fuel system is low on fuel. (L.FUEL.LVL=1) and (SD=1 or RD=1)
R FUEL LEVEL LO	Right wing fuel system is low on fuel. (R.FUEL.LVL=1) and (SD=1 or RD=1)
L FLAP MON FAIL	Left flap/forward wing monitor has failed functional ground test. (L.FLAP.MON=1)
R FLAP MON FAIL	Right flap/forward wing monitor has failed functional ground test. (R.FLAP.MON=1)
L WING BOOT FAIL	Left wing boot has failed to inflate. (L.ICE.BOOT.FLG=1)

Table 5-86. Description of CAS Messages Displayed on ECD-870

MESSAGE	MEANING (INPUT LOGIC, SEE TABLE 5-87)
	CAUTION MESSAGES (YELLOW)
R WING BOOT FAIL	Right wing boot has failed to inflate. (R.ICE.BOOT.FLG=1)
L STALL WRN FAIL	Left stall warning computer has failed. (L.STAL.COM.FLG=1)
R STALL WRN FAIL	Right stall warning computer has failed. (R.STAL.COM.FLG=1)
L FWD BOOT FAIL	Left forward wing boot has failed to inflate. (L.FWD.BOOT.FLG=1)
R FWD BOOT FAIL	Right forward wing boot has failed to inflate. (R.FWD.BOOT.FLG=1)
L LIP HEAT LOW	Bleed air through the left engine's heated inlet is not hot enough for icing conditions. (L.LIP.TMP.FLG=1)
R LIP HEAT LOW	Bleed air through the right engine's heated inlet is not hot enough for icing conditions. (R.LIP.TMP.FLG=1)
BRAKE DEICE TIME	Automatic timer has not shut off the brake deice system (after 12 minutes with gear up). (L.BRK.VAL=1 or R.BRK.VAL=1) and (L.GEAR.UP=1 or R.GEAR.UP=1) and SD=720
ICING	Ice detector is sensing icing conditions, and all ice protection systems are not selected on. (ICE.DET=1) and (L.ICE.SEL=0 or R.ICE.SEL=0 or STALL.HT=0 or L.WIND.HT=0 or R.WIND.HT=0 or L.PIT.SEL=0 or R.PIT.SEL=0 or L.FUEL.VENT=0 or R.FUEL.VENT=0)
DUCT OVERTEMP	Environmental duct air is too hot. (DUCT.1=1 or DUCT.2=1 or DUCT.3=1)
PITOT OVERHEAT	Pitot heads are too hot during low-speed ground operations. (L.PIT.SEL=1 or R.PIT.SEL=1) and L.WOW.OR.R.WOW=0 and IAS<40 and SD=120
OXYGEN NOT ARMED	Oxygen system is not armed. (OXY.ARM=0)
OXYGEN PRES LO	Oxygen tank pressure is low and the system is armed. (OXY.ARM=1 and OXY.QTY=1)
BATTERY TIE OPEN	Battery is isolated from the generator buses. (BATT.TIE=0)
HYD FLUID LO	Hydraulic fluid level in the power pack is low. (HYD.QTY=1)
RUD TRIM SYNC	Rudder trim is out-of-sync. (RUD.TRIM.SYNC=0)
STBY ATTGYRO OFF	Standby gyro power is not selected on. (ATT.GYRO.SEL=0)
CAUTION TEST	Annunciator test button has been pressed. (ANN.TEST=1)

Table 5-86. Description of CAS Messages Displayed on ECD-870

MESSAGE	MEANING (INPUT LOGIC, SEE TABLE 5-87)
	CAUTION MESSAGES (YELLOW)
ROLL DISAGREE	The #1 and #2 displayed roll attitudes do not agree. (determined by software in PFD or ND)
PITCH DISAGREE	The #1 and #2 displayed pitch attitudes do not agree. (determined by software in PFD or ND)
HDG DISAGREE	The #1 and #2 displayed headings do not agree. (determined by software in PFD or ND)
LOC DISAGREE	The #1 and #2 displayed localizer deviations do not agree. (determined by software in PFD or ND)
GS DISAGREE	The #1 and #2 displayed glideslope deviations do not agree. (determined by software in PFD or ND)
AVIONIC AIR FAIL	No air flow within the avionics air distribution duct. (AVOC.AIR.FAIL=0)
PITCH TRIM OFF	Pitch trim is off. (PTCH.TRIM.SEL=0)
PITCH TRIM SYNC	Pitch trim is out-of-sync. (PTCH.TRIM.SYNC=0)
ROLL TRIM OFF	Roll trim is off. (ROLL.TRIM.SEL=0)
RUDDER TRIM OFF	Rudder trim is off. (RUD.TRIM.SEL=0)
RUDDER TRIM FAIL	Rudder trim has failed. (RUD.TRIM.FLG=1)
STBY ATT BATT LO	Battery pack for the standby attitude gyro in not adequately charged. (AUX.BATT.TEST=1 and GYRO.BATT.LVL=1)
ROLL TRIM SYNC	Roll trim is out-of-sync. (ROLL.TRIM.SYNC=0)
PNEU PRESS LOW	Pneumatic system pressure is too low to operate the de-ice boots. (L.PNU.PRESS=0 or R.PNU.PRESS=0)
AFX DISABLED	Autofeather is selected, but disabled by power settings while on the ground. (L.AFX=0 or R.AFX=0) and L.ENG.SCRD=0 and R.ENG.SCRD=0 and L.WOW.OR.R.WOW=0 and AFX.SEL=0 and L.TORQ>50% and R.TORQ>50% and SD=2 and RD=2
ANTI-SKID INOP	Anti-skid system is inoperative. (ANTI.SKID.FLG=0)
AFX OFF	Autofeather system is not armed. (L.GEAR.DN=1 or R.GEAR.DN=1) and AFX.SEL=1
MAZ DISAGREE	The #1 and #2 displayed MLS azimuth deviations do not agree. (determined by software in PFD or ND)

Table 5-86. Description of CAS Messages Displayed on ECD-870

MESSAGE	MEANING (INPUT LOGIC, SEE TABLE 5-87)
	CAUTION MESSAGES (YELLOW)
MGP DISAGREE	The #1 and #2 displayed MLS glidepath deviations do not agree. (determined by software in PFD or ND)
MAIN DEICE FAIL	Left ice detector is inoperative or the primary auto deice controller has failed. (MAIN.DEICE.FLG=0)
STBY DEICE FAIL	Right ice detector is inoperative or the standby auto deice controller has failed. (STBY.DEICE.FLG=0)
PUSHER MOTOR ON	Stick pusher motor is energized and the pusher clutch is not energized. (PUSH.MOTOR=1 and PUSH.CLTCH=0)
PUSHER CLUTCH ON	Stick pusher clutch is energized and the pusher motor is not energized. (PUSH.MOTOR=0 and PUSH.CLTCH=1)
PUSHER INOP	Stick pusher is inoperative. (PUSH.FLG=1)
POWER BRAKE INOP	Power brake system is inoperative. (PWR.BRK.FLG=0)

Table 5-86. Description of CAS Messages Displayed on ECD-870

MESSAGE	MEANING (INPUT LOGIC, SEE TABLE 5-87)
	STATUS MESSAGES (WHITE)
L GEAR UP	Left gear is fully retracted and emergency gear extension is selected. (EMER.GEAR.SEL=1 and L.GEAR.UP=1)
R GEAR UP	Right gear is fully retracted and emergency gear extension is selected. (EMER.GEAR.SEL=1 and R.GEAR.UP=1)
L GEAR IN TRANS	Left gear is neither fully extended nor retracted and emergency gear extension is selected. (EMER.GEAR.SEL=1 and L.GEAR.UP=0 and L.GEAR.DN=0)
R GEAR IN TRANS	Right gear is neither fully extended nor retracted and emergency gear extension is selected. (EMER.GEAR.SEL=1 and R.GEAR.UP=0 and R.GEAR.DN=0)
L PROP PITCH LO	Left propeller pitch is below the flight idle stop. (L.PROP.ANG=1)
R PROP PITCH LO	Right propeller pitch is below the flight idle stop. (R.PROP.ANG=1)
L ENG SECURED	Left engine is intentionally shutdown by prop in feather, condition lever in cutoff, and firewall valve closed. This message replaces other messages normally displayed when the left engine is not running. (L.PROP.FX=1 and L.COND.CUT=1 and L.FVAL.POS=1)
R ENG SECURED	Right engine is intentionally shutdown by prop in feather, condition lever in cutoff, and firewall valve closed. This message replaces other messages normally displayed when the right engine is not running. (R.PROP.FX=1 and R.COND.CUT=1 and R.FVAL.POS=1)
L CHIP DETECT	Left engine oil contamination is detected and the engine is not secured. (L.CHP.DET=1)
R CHIP DETECT	Right engine oil contamination is detected and the engine is not secured. (R.CHP.DET=1)
NS GEAR UP	Nose gear is fully retracted and emergency gear extension is selected. (EMER.GEAR.SEL=1 and N.GEAR.UP=1)
NS GEAR IN TRANS	Nose gear neither fully extended nor retracted and emergency gear extension is selected. (EMER.GEAR.SEL=1 and N.GEAR.UP=0 and N.GEAR.DN=0)
PASS OXYGEN ON	Passenger oxygen system is charged. (PASS.OXY=1)
EXT POWER CONN	External power cart is plugged in. (EXT.PLG=1)
ICING	Ice detector is sensing icing conditions, and all ice protection systems are selected on. (ICE.DET=1 and L.ICE.SEL=1 and R.ICE.SEL=1 and STALL.HT=1 and L.WIND.HT=1 and R.WIND.HT=1 and L.PIT.SEL=1 and R.PIT.SEL=1 and L.FUEL.VENT=1 and R.FUEL.VENT=1)

Table 5-86. Description of CAS Messages Displayed on ECD-870

MESSAGE	MEANING (INPUT LOGIC, SEE TABLE 5-87)
	STATUS MESSAGES (WHITE)
STBY ATT BAT OK	Battery pack for the backup attitude display is charged to an adequate level. (AUX.BATT.TEST=1 and GYRO.BATT.LVL=0 and SD=5)
STBY ATT BAT TST	Wait for the battery test to be completed. (AUX.BATT.TEST=1 and GYRO.BATT.LVL=0 and STBY.ATT.BAT.OK=0)
ROLL COMP OFF	Roll comparator function is inoperative. (determined by software in PFD or ND)
PITCH COMP OFF	Pitch comparator function is inoperative. (determined by software in PFD or ND)
HDG COMP OFF	Heading comparator function is inoperative. (determined by software in PFD or ND)
FUEL TRANSFER >	Fuel is being transferred from the left to the right fuel tank. (XFLOW.VAL=1 and L.STBY.PMP=1)
FUEL TRANSFER <	Fuel is being transferred from the right to the left fuel tank. (XFLOW.VAL=1 and R.STBY.PMP=1)
EMER BLEED ON	Emergency bleed air valve is open. (FUSE.BLD.VAL=1)
AFX DISABLED	Autofeather is selected, but disabled by power settings while airborne. (L.AFX=0 or R.AFX=0) and L.WOW.OR.R.WOW=1 and AFX.SEL=0 and L.TORQ>50% and R.TORQ>50% and L.ENG.SCRD=0 and R.ENG.SCRD=0 and AFX.DISABLED=0 and SD=2
ALL COMP OFF	No comparators are operative. The "DISAGREE" and "COMP OFF" messages are inhibited. (determined by software in PFD or ND)

Table 5-86. Description of CAS Messages Displayed on ECD-870

MESSAGE	MEANING (INPUT LOGIC, SEE TABLE 5-87)
	ADVISORY MESSAGES (GREEN)
L IGNITION ON	Left engine ignition is on. (L.IGN=1)
R IGNITION ON	Right engine ignition is on. (R.IGN=1)
L ENG ANTICE ON	Left engine ice vane and inlet lip heat are selected and operating. (L.ICE.SEL=1 and L.LIP.HT=1 and L.IVAN.EXT=1 and L.BLD.VAL=1)
R ENG ANTICE ON	Right engine ice vane and inlet lip heat are selected and operating. (R.ICE.SEL=1 and R.LIP.HT=1 and R.IVAN.EXT=1 and R.BLD.VAL=1)
L BRAKE DEICE ON	Left brake deice valve is open. (L.BRK.VAL=1)
R BRAKE DEICE ON	Right brake deice valve is open. (R.BRK.VAL=1)
MAN TIES CLOSED	Generator bus ties are manually closed. (MAN.TIE.SEL=1 and L.GEN.TIE=1 and R.GEN.TIE=1)
WSHLD STBY POWER	Pilot's windshield standby heat system is operating. (ALTN.WND.CNTL=1)
AV ALTN BLWR ON	Alternate blower for avionics cooling is operating. (ALTN.BLW=1)
AFX ENABLED	Both left and right autofeather systems are armed. (L.AFX=1 and R.AFX=1)

Table 5-87. Aircraft Input Discretes

INPUT DISCRETE NAME (TERM REFERENCED IN TABLE 5-86)	ENCODING LRU	PIN	LOGIC "0"	"1"	OCTAL LABEL-BIT
Autofeather disabled (AFX.DISABLED)	Caution message AFX DISABLED				
Autofeather select (AFX.SEL)	DAU	P2-S	open	28V	273-24
Alternate blower (ALTN.BLW)	L-EDC	P2-9	open	28V	270-28
Backup windshield heat control (ALTN.WND.CNTL)	DAU	P2-z	open	28V	274-15
Annunciator test (ANN.TEST)	DAU	P4-k	open	28V	275-19
Anti-skid inoperative (ANTI.SKID.FLG)	L-EDC	P2-12	open	28V	271-24
Attitude gyro select (ATT.GYRO.SEL)	DAU	P3-b	open	28V	274-26
Auxiliary battery test (AUX.BATT.TEST)	DAU	P3-c	open	28V	274-27
Avionics air flow fail (AVOC.AIR.FAIL)	DAU	P1-M	open	28V	273-13
Avionics battery level low (AVOC.BATT.LVL)	DAU	P1-R	gnd	open	273-16
Aircraft battery charging (BATT.CHRG)	R-EDC	P2-11	open	28V	271-22
Battery bus tie (BATT.TIE)	R-EDC	P2-26	open	28V	272-18
Duct overtemp no. 1 (DUCT.1)	DAU	P4-T	open	28V	275-15
Duct overtemp no. 2 (DUCT.2)	L-EDC	P1-14	open	28V	271-18
Duct overtemp no. 3 (DUCT.3)	R-EDC	P1-14	open	28V	271-18
Emergency gear extend select (EMER.GEAR.SEL)	DAU	P1-c	open	28V	273-19
External power plug inserted (EXT.PLG)	DAU	P4-S	open	28V	275-14
Fuselage bleed air valve (FUSE.BLD.VAL)	L-EDC	P1-15	open	28V	271-20
Forward ice boot fail (FWD.BOOT.FLG)	DAU	P3-L	open	28V	274-20
JET gyro battery charge level (GYRO.BATT.LVL)	DAU	P4-y	gnd	open	275-22
Hydraulic fluid quantity (HYD.QTY)	L-EDC	P2-11	open	28V	271-22
IAS less than 40 kts (IAS<40)	ADC	none	software		none
Ice detector (ICE.DET)	DAU	P1-N	open	28V	273-14
Left autofeather system (L.AFX)	L-EDC	P1-5	open	28V	270-19
Left AHRS aligning (L.AHRS.ALIGN)	DAU	P4-z	open	28V	275-23
Left bleed air valve (L.BLD.VAL)	L-EDC	P2-10	open	28V	271-11
Left brake temperature (L.BRK.TMP)	L-EDC	P1-19	open	28V	271-17
Left brake deice valve (L.BRK.VAL)	L-EDC	P1-17	open	28V	271-13
Left oil chip detector (L.CHP.DET)	L-EDC	P1-6	open	28V	270-12
Left condition lever cutoff (L.COND.CUT)	DAU	P2-GG	open	28V	274-18
Left engine secured (L.ENG.SCRD)	Status message L ENG SECURED				
Left flap monitor (L.FLAP.MON)	L-EDC	P2-19	open	28V	271-27
Left flap position (L.FLAP.POS)	L-EDC	P2-15	open	28V	272-11
Left fuel discrete A (L.FUEL.DISC.A)	L-EDC	P1-44	open	28V	272-24
Left fuel discrete B (L.FUEL.DISC.B)	L-EDC	P1-42	open	28V	272-25
Left fuel discrete C (L.FUEL.DISC.C)	L-EDC	P1-43	open	28V	272-26
Left fuel level (L.FUEL.LVL)	L-EDC	P1-4	open	28V	270-17
Left fuel vent heat select (L.FUEL.VENT)	DAU	P2-R	open	28V	273-23
Left firewall valve position (L.FVAL.POS)	L-EDC	P1-8	open	28V	270-16
Left firewall valve selection (L.FVAL.SEL)	L-EDC	P2-8	open	28V	270-26
Left forward wing boot failure (L.FWD.BOOT.FLG)	DAU	P2-y	open	28V	274-14
Left gear down lock (L.GEAR.DN)	L-EDC	P1-18	open	28V	271-15
Left gear up lock (L.GEAR.UP)	L-EDC	P1-13	open	28V	271-16
Left generator output (L.GEN.OUT)	L-EDC	P1-7	open	28V	270-14
Left generator bus tie (L.GEN.TIE)	L-EDC	P2-3	open	28V	270-25
Left ice boot fail (L.ICE.BOOT.FLG)	DAU	P4-R	open	28V	275-13
Left engine anti-ice select (L.ICE.SEL)	L-EDC	P2-20	open	28V	271-29
Left engine ignition (L.IGN)	L-EDC	P1-10	open	28V	270-20
Left ice vane extended (L.IVAN.EXT)	L-EDC	P2-6	open	28V	270-22
Left ice vane retracted (L.IVAN.RET)	L-EDC	P2-1	open	28V	270-21

Table 5-87. Aircraft Input Discretes

INPUT DISCRETE NAME (TERM REFERENCED IN TABLE 5-86)	ENCODING LRU	PIN	LOGIC "0"	"1"	OCTAL LABEL-BIT
Left engine lip heat valve (L.LIP.HT)	L-EDC	P2-2	open	28V	270-23
Left lip heat low (L.LIP.TMP.FLG)	L-EDC	P1-2	open	28V	270-13
Left pitot heat select (L.PIT.SEL)	DAU	P2-m	open	28V	274-12
Left pneumatic pressure (L.PNU.PRESS)	L-EDC	P1-20	open	28V	271-19
Left prop blade angle (L.PROP.ANG)	L-EDC	P1-9	open	28V	270-18
Left prop lever FX (L.PROP.FX)	DAU	P2-AA	open	28V	274-16
Left prop arc enable (L.PRP.WRN.ARC)	L-EDC	P2-27	gnd	open	272-20
Left stall computer fail (L.STAL.COM.FLG)	DAU	P3-N	open	28V	274-22
Left standby pump (L.STBY.PMP)	L-EDC	P1-11	open	28V	271-12
Left engine torque more than 50% (L.TORQ>50%)	L-EDC	none	software		none
Left wheelwell temperature (L.WHL.TMP)	L-EDC	P1-3	open	28V	270-15
Left windshield heat select (L.WIND.HT)	DAU	P3-d	open	28V	274-28
Left weight on wheels (L.WOW)	L-EDC	P2-22	gnd	open	272-19
Left or right weight on wheels (L.WOW.OR.R.WOW)	DAU	none	software		275-29
Main deice fail (MAIN.DEICE.FLG)	DAU	P2-k	open	28V	274-11
Manual tie select (MAN.TIE.SEL)	DAU	P1-L	open	28V	273-12
Master caution reset (MCS.RESET)	DAU	P2/4-h	open	28V	275-26
Master warning reset (MWS.RESET)	DAU	P1/3-J	open	28V	275-25
Nose gear down lock (N.GEAR.DN)	DAU	P1-a	open	28V	273-17
Nose gear up lock (N.GEAR.UP)	DAU	P1-b	open	28V	273-18
Oxygen system armed (OXY.ARM)	DAU	P2-T	open	28V	273-25
Oxygen bottle quantity (OXY.QTY)	DAU	P2-U	open	28V	273-26
Passenger oxygen sensor (PASS.OXY)	L-EDC	P2-17	open	28V	271-23
Prop sync select (PSYNC.SEL)	DAU	P3-a	open	28V	274-25
Pitch trim select (PTCH.TRIM.SEL)	DAU	P2-N	open	28V	273-21
Pitch trim sync (PTCH.TRIM.SYNC)	DAU	P4-GG	gnd	open	275-28
Pusher clutch on (PUSH.CLTCH)	DAU	P4-j	open	28V	275-18
Stick pusher fail (PUSH.FLG)	DAU	P4-n	open	28V	275-21
Pusher motor on (PUSH.MOTOR)	DAU	P3-R	open	28V	274-24
Power break inop (PWR.BRK.FLG)	DAU	P2-j	gnd	open	273-28
Reset delay in seconds (RD)	Delays CAS annun-off for RD sec				
Right autofeather system (R.AFX)	R-EDC	P1-5	open	28V	270-19
Right AHRS aligning (R.AHRS.ALIGN)	DAU	P4-BB	open	28V	275-27
Right bleed air valve (R.BLD.VAL)	R-EDC	P2-10	open	28V	271-11
Right brake temperature (R.BRK.TMP)	R-EDC	P1-19	open	28V	271-17
Right brake deice valve (R.BRK.VAL)	R-EDC	P1-17	open	28V	271-13
Right oil chip detector (R.CHP.DET)	R-EDC	P1-6	open	28V	270-12
Right condition lever cutoff (R.COND.CUT)	DAU	P3-K	open	28V	274-19
Right engine secured (R.ENG.SCRD)	Status message R ENG SECURED				
Right flap monitor (R.FLAP.MON)	R-EDC	P2-19	open	28V	271-27
Right flap position (R.FLAP.POS)	R-EDC	P2-15	open	28V	272-11
Right fuel discrete A (R.FUEL.DISC.A)	R-EDC	P1-44	open	28V	272-24
Right fuel discrete B (R.FUEL.DISC.B)	R-EDC	P1-42	open	28V	272-25
Right fuel discrete C (R.FUEL.DISC.C)	R-EDC	P1-43	open	28V	272-26
Right fuel level (R.FUEL.LVL)	R-EDC	P1-4	open	28V	270-17
Right fuel vent heat select (R.FUEL.VENT)	DAU	P4-AA	open	28V	275-24
Right firewall valve position (R.FVAL.POS)	R-EDC	P1-8	open	28V	270-16
Right firewall valve selection (R.FVAL.SEL)	R-EDC	P2-8	open	28V	270-26
Right forward wing boot failure (R.FWD.BOOT.FLG)	DAU	P3-M	open	28V	274-21
Right gear down lock (R.GEAR.DN)	R-EDC	P1-18	open	28V	271-15

Table 5-87. Aircraft Input Discretes

INPUT DISCRETE NAME (TERM REFERENCED IN TABLE 5-86)	ENCODING LRU	PIN	LOGIC "0"	"1"	OCTAL LABEL-BIT
Right gear up lock (R.GEAR.UP)	R-EDC	P1-13	open	28V	271-16
Right generator output (R.GEN.OUT)	R-EDC	P1-7	open	28V	270-14
Right generator bus tie (R.GEN.TIE)	R-EDC	P2-3	open	28V	270-25
Right ice boot fail (R.ICE.BOOT.FLG)	DAU	P2-i	open	28V	273-27
Right engine anti-ice select (R.ICE.SEL)	R-EDC	P2-20	open	28V	271-29
Right engine ignition (R.IGN)	R-EDC	P1-10	open	28V	270-20
Right ice vane extended (R.IVAN.EXT)	R-EDC	P2-6	open	28V	270-22
Right ice vane retracted (R.IVAN.RET)	R-EDC	P2-1	open	28V	270-21
Right engine lip heat valve (R.LIP.HT)	R-EDC	P2-2	open	28V	270-23
Right lip heat low (R.LIP.TMP.FLG)	R-EDC	P1-2	open	28V	270-13
Right pitot heat select (R.PIT.SEL)	DAU	P2-n	open	28V	274-13
Right pneumatic pressure (R.PNU.PRESS)	R-EDC	P1-20	open	28V	271-19
Right prop blade angle (R.PROP.ANG)	R-EDC	P1-9	open	28V	270-18
Right prop lever FX (R.PROP.FX)	DAU	P2-BB	open	28V	274-17
Right prop arc enable (R.PRP.WRN.ARC)	R-EDC	P2-27	gnd	open	272-20
Right stall computer fail (R.STAL.COM.FLG)	DAU	P4-i	open	28V	275-17
Right standby pump (R.STBY.PMP)	R-EDC	P1-11	open	28V	271-12
Right engine torque more than 50% (R.TORQ>50%)	R-EDC	none	software		none
Right wheelwell temperature (R.WHL.TMP)	R-EDC	P1-3	open	28V	270-15
Right windshield heat select (R.WIND.HT)	DAU	P4-N	open	28V	275-11
Right weight on wheels (R.WOW)	R-EDC	P2-22	gnd	open	272-19
Roll trim fail (ROLL.TRIM.FLG)	DAU	P1-K	open	28V	273-11
Roll trim select (ROLL.TRIM.SEL)	DAU	P4-m	open	28V	275-20
Roll trim sync (ROLL.TRIM.SYNC)	DAU	P2-P	gnd	open	273-22
Rudder trim fail (RUD.TRIM.FLG)	DAU	P4-P	open	28V	275-12
Rudder trim select (RUD.TRIM.SEL)	DAU	P3-P	open	28V	274-23
Rudder trim sync (RUD.TRIM.SYNC)	DAU	P4-U	gnd	open	275-16
Set delay in seconds (SD)	Delays CAS annun-on for SD sec				
Stall warning heat select (STALL.HT)	R-EDC	P2-17	open	28V	271-23
Standby gyro battery charged (STBY.ATT.BAT.OK)	Status message STBY ATT BAT OK				
Standby deice fail (STBY.DEICE.FLG)	DAU	P1-d	open	28V	273-20
Fuel cross-flow valve (XFLOW.VAL)	R-EDC	P1-21	open	28V	271-21
Spare	DAU	P1-P	open	28V	273-15
Reserved	DAU	-	-	-	273-29
Reserved	DAU	-	-	-	274-29
Spare	L-EDC	P1-1	open	28V	270-11
Spare	L-EDC	P2-7	open	28V	270-24
Spare	L-EDC	P2-4	open	28V	270-27
Spare	L-EDC	P2-5	open	28V	270-29
Spare	L-EDC	P1-12	open	28V	271-14
Spare	L-EDC	P1-21	open	28V	271-21
Spare	L-EDC	P2-18	open	28V	271-25
Spare	L-EDC	P2-13	open	28V	271-26
Spare	L-EDC	P2-14	open	28V	271-28
Spare	L-EDC	P2-21	open	28V	272-12
Spare	L-EDC	P1-22	open	28V	272-13
Spare	L-EDC	P1-27	open	28V	272-14
Spare	L-EDC	P1-25	open	28V	272-15
Spare	L-EDC	P1-28	open	28V	272-16
Spare	L-EDC	P1-26	open	28V	272-17

Table 5-87. Aircraft Input Discretes

INPUT DISCRETE NAME (TERM REFERENCED IN TABLE 5-86)	ENCODING LRU	PIN	LOGIC "0"	"1"	OCTAL LABEL-BIT
Spare	L-EDC	P2-26	open	28V	272-18
Spare	L-EDC	P2-25	gnd	open	272-21
Spare	L-EDC	P2-28	gnd	open	272-22
Reserved	L-EDC	-	-	-	272-23
Reserved	L-EDC	-	-	-	272-27
Reserved	L-EDC	-	-	-	272-28
Reserved	L-EDC	-	-	-	272-29
Spare	R-EDC	P1-1	open	28V	270-11
Spare	R-EDC	P2-7	open	28V	270-24
Spare	R-EDC	P2-4	open	28V	270-27
Spare	R-EDC	P2-9	open	28V	270-28
Spare	R-EDC	P2-5	open	28V	270-29
Spare	R-EDC	P1-12	open	28V	271-14
Spare	R-EDC	P1-15	open	28V	271-20
Spare	R-EDC	P2-12	open	28V	271-24
Spare	R-EDC	P2-18	open	28V	271-25
Spare	R-EDC	P2-13	open	28V	271-26
Spare	R-EDC	P2-14	open	28V	271-28
Spare	R-EDC	P2-21	open	28V	272-12
Spare	R-EDC	P1-22	open	28V	272-13
Spare	R-EDC	P1-27	open	28V	272-14
Spare	R-EDC	P1-25	open	28V	272-15
Spare	R-EDC	P1-28	open	28V	272-16
Spare	R-EDC	P1-26	open	28V	272-17
Spare	R-EDC	P2-25	gnd	open	272-21
Spare	R-EDC	P2-28	gnd	open	272-22
Spare	R-EDC	-	-	-	272-23
Reserved	R-EDC	-	-	-	272-27
Reserved	R-EDC	-	-	-	272-28
Reserved	R-EDC	-	-	-	272-29

Starship 1
Avionics System

Rockwell International

bulletins

Collins General Aviation Division

Printed in USA

•523-0774081-001118
1st Edition, 14 January 1989

Service Bulletins and Service Information Letters

(Refer to latest edition/addendum of the General Aviation Equipment Service Bulletin/Information Letter Index 523-0766944 for up-to-date listing.)

SB/SIL Number	*Unit*	*Title*	*Date*

Rockwell
International